U.S. Department of Transportation
Federal Aviation Administration

AFS-600
Regulatory Support Division

ADVISORY CIRCULAR

43-16A

AVIATION MAINTENANCE ALERTS

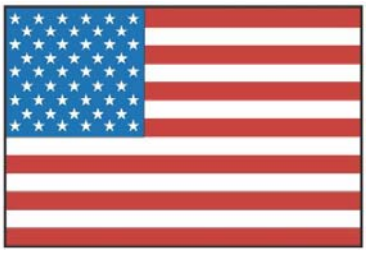

ALERT NUMBER 367

FEBRUARY 2009

CONTENTS

AIRPLANES

BEECH 1
BEECHJET 2
BOMBARDIER 2
CESSNA 4
DASSAULT 5
DIAMOND 5
PIPER 7

AIR NOTES

INTERNET SERVICE DIFFICULTY REPORTING (iSDR) WEB SITE 8
IF YOU WANT TO CONTACT US 9
AVIATION SERVICE DIFFICULTY REPORTS 10

U.S. DEPARTMENT OF TRANSPORTATION
FEDERAL AVIATION ADMINISTRATION
WASHINGTON, DC 20590

AVIATION MAINTENANCE ALERTS

The Aviation Maintenance Alerts provides a common communication channel through which the aviation community can economically interchange service experience, cooperating in the improvement of aeronautical product durability, reliability, and safety. This publication is prepared from information submitted by those who operate and maintain civil aeronautical products. The contents include items that have been reported as significant, but have not been evaluated fully by the time the material went to press. As additional facts such as cause and corrective action are identified, the data will be published in subsequent issues of the Alerts. This procedure gives Alerts' readers prompt notice of conditions reported via a Malfunction or Defect Report (M or D) or a Service Difficulty Report (SDR). Your comments and suggestions for improvement are always welcome. Send to: FAA; ATTN: Aviation Data Systems Branch (AFS-620); P.O. Box 25082; Oklahoma City, OK 73125-5029.

(Editor's notes are provided for editorial clarification and enhancement within an article. They will always be recognized as italicized words bordered by parentheses.)

AIRPLANES

BEECH

Beech: A60; Deice Boot Separation: ATA 6112

A repair station technician describes the following defect report. "A propeller came in for repairs, necessitating the installation of new deice boots on all three blades *(Hartzell; HC-F3YR-2UF)*. This propeller was later installed by the *(aircraft)* owner's mechanic. One of the three boots came off *(during engine operation)*, resulting in a dent on the aircraft fuselage after *(approximately)* seven hours of flying.

"Questioning our mechanic (who installed the boots) revealed no deviations in procedures *(which might have occurred)* during installation. It was determined the glue used for the installation *(...was within shelf life parameters.)"*

"Our facility visited the location of the aircraft and installed a new boot on the propeller. It was observed that the adhesive adhered to the area of the blade where the boot came off—the adhesive did not separate from the blade. The *(thrown)* boot was not recovered and could not be inspected.

"The boots on this propeller are long strap boots. The boot strap, on this type of installation, must be positioned within the spinner such that the centrifugal forces during operation do not push the strap through the gap between the spinner cut-out and the propeller blade. Should the strap be improperly positioned during spinner installation, it is possible for the strap to come out of this gap—resulting in separation of the boot from the blade. When properly positioned the strap remains contained within the spinner. Similarly, should the propeller be run up on the ground without the spinner installed, the boots can separate from the blade.

"Since the two remaining boots are attached tightly, it is likely the boot strap was not positioned properly during spinner installation, resulting in the boot separating from the blade."

(It would appear the supplied part's serial number is actually the Goodrich P/N: 4E1188-3. The FAA Service Difficulty Reporting System (SDRS) database returns two additional boot reports for this number, both on Piper PA31 aircraft. A couple of photos of that strap/spinner containment process might have earned you rights to demand lunch from me! Next time, just send a scanned copy of your report direct to my personal mail with attached jpeg photos: daniel.roller@faa.gov.)

Part Total Time: 7.0 hours (approximately).

BEECHJET

Beechjet: 400A; Fuselage Bulkhead Cracks; ATA 5310

"While performing an A-B inspection," says an aircraft technician, "*(I)* found the right and left aft fuselage bleed air line attach brackets pulled from the aft fuselage bulkhead, resulting in cracks in the bulkheads at frame station 329.92. I recommend inspecting this area thoroughly at each inspection and contacting Hawker Beechcraft for repair options.

"This is the fourth aircraft in a row that this bulkhead *(P/N 45A34901-11)* has been found cracked. The crack has been found on both sides of the aircraft."

(Cycles indicated: 3,225. Reference your submission in last December's Alerts. The SDRS database only returns two entries for this bulkhead P/N, this one will make three. At least six entries are missing from the data base! I can't promise you nine would effect a change any faster than three, but it will provide increasing validity to the defect observation. If you have a log that will burn, don't waste it. Throw it on the fire—Ed.)

Part Total Time: 2,967.6 hours.

BOMBARDIER

Bombardier *(and other)*: CL-600-2B16; Water Heater Failure; ATA 3820

(The following article is a safety advisement from Transport Canada's Service Difficulty Alerts. It was duplicated from their web site and is republished here with permission from Civil Aviation Technical Inspector Steve Dudka. Source and contact information is found at the article's end.)

AL 2009-01
10 February 2009

Galley or Washroom Water Heater failure
Supplemental Type Certificate (STC) – SA696GL and STC SA4370SW

Transport Canada Civil Aviation (TCCA) has learned through the Service Difficulty Reporting (SDR) program that a Bombardier CL-600-2B16 (601-3R) Challenger's crew observed smoke coming out of the fuel control panel in the forward galley area. The aircraft declared an emergency and made a successful landing.

Investigation has revealed the water heater insulation blanket in the forward galley had evidence of heat damage. The heater (P/N 444-0007 or 500-0120-7-0) is part of a United States Supplemental Type Certificate (STC) – SA696GL and SA4370SW.

Further investigation revealed the thermostat on the heater had failed allowing the temperature to climb well above design limits causing the heater's insulation and the adjacent aircraft insulation to begin to overheat (smoke). There have been four (4) known previous events where the thermostat has failed with similar results.

The water heaters may have been installed on, but not limited to, Canadair Challenger, Gulfstream GII, GIII, GIV, Hawker 700/800 and in a wide variety of aircraft outside of the STC using a FAA Airworthiness Approval Tag 8130-3.

Transport Canada recommends that all operators and Approved Maintenance Organizations review aircraft records and verify if their aircraft has had interior modifications carried out at either Gulfstream's (formerly KC Aviation) Appleton or Dallas facilities. Also, TCCA highly recommends a visual inspection be carried out for this heater installation and evidence of water heater overheating at the earliest possible opportunity.

The Transportation Safety Board (TSB) and Transport Canada investigation for this more recent event will continue with the support of General Dynamics, the STC holder. In the interim, General Dynamics Aviation Services will produce an All Affected Operators Message for Gulfstream and Non-Gulfstream products, reference control # 2008-0014.

Any further defects or occurrences should be reported to Transport Canada, Continuing Airworthiness, Ottawa, via the Service Difficulty Reporting (SDR) program. For further information, contact a Transport Canada Centre, or Mr. Steve Dudka, Continuing Airworthiness, Ottawa, telephone 613 952-4361, facsimile 613 996-9178 or e-mail steve.dudka@tc.gc.ca.

http://www.tc.gc.ca/CivilAviation/certification/continuing/Alert/2009-01.htm

(The FAA's SDRS database doesn't return a record for P/N 444-007, but if the number is truncated by 2 digits and provided a wild card '%', P/N 444-007-103 returns on another CL600. P/N 5000-0120-7-0 returns one similar report. ANYTHING to do with fire is well worth a few moments of consideration and inspection. Thanks goes to Steve for sharing this information—Ed.)

Part Total Time: (n/a).

CESSNA

Cessna: 140; Failed Wing Fabric Patch; ATA 5730

An A&P mechanic states, "This wing was previously repaired by removing the upper top center fabric between stations 58 to 176. Ribs were repaired as per a 337 and the fabric was replaced using Superflight System II recovering process as outlined in their D-102A manual. This manual calls for a 2 inch minimum overlap of fabric. This repair was done with a 3 to 4 inch overlap on the previously finished old fabric. For further reference, AC 43-13 1B (Chapter 2; section 4; paragraph 2-45d) calls for a maximum of 4 inch overlaps on wing repairs on aircraft not exceeding Vne *(velocity never exceed)* of 150 MPH. The Superflight manual states repairs can be done without removing the old finish coat. Cessna fabric clips were used to attach the fabric to the ribs.

"During a flight...the fabric patch came off. The aircraft was landed with some difficulty, but without incident. It is speculated the air stream got under a loose tape and lifted the entire patch from the wing, including ripping the fabric clips out of the ribs. It is further speculated the pilot's preflight had failed to identify a potential problem arising from a loose tape.

"The Superflight recovering process has changed over the years. The new System VI differs from the older process in the type of base primer and finishing paint. Further investigation has determined Superflight changed their instructions for installing fabric tapes. Under the System II instruction manual D-102A, tapes were laid in a wet bed of thinned U500 adhesive and covered with an additional coat applied with sufficient pressure to squeeze out any air bubbles. The current System VI process and manual D-102B calls for brushing a coat of thinned U-500 adhesive where the tape will be laid. This is allowed to dry and is followed with an additional application which is also allowed to dry. The tape is then laid down and brushed with MEK, working the cement up into the weave of the tape and paying special attention to working the edges down well to secure.

"To prevent any future problems with this aircraft the repair to the wing will be made by applying new fabric to the entire upper surface of the wing and overlapping the fabric around the leading edge as outlined in the System VI manual for new installations. In addition, pinked edged tapes will be used in place of the straight edged tapes of the older repair and installation. This will allow for better adhesion due to the increased surface area. As the left wing was also repaired in a similar manner...the existing upper fabric will also be replaced. Inspection of the right wing has revealed no signs of a problem but it has been determined to proceed with this additional work in the interest of safety."

Part Total Time: (unknown).

Cessna: 177RG; Cracked Bulkhead Structure; ATA 5712

(The following combines two similar reports from the same repair station technician. The second report references a 177B.)

"During a routine inspection *(I)* found the bulkhead *(P/N 1221062-8)* cracked. I checked two additional Cardinals that happened to be in our shop and found one of them to have a similar crack. This section of the bulkhead is the attach structure for the lower attach angle for the inboard flap drive bell crank. It is curious that the factory installed some extra reinforcement structure (a bracket) in this position in the L/H wing. There are even some 'pilot drill holes' *(which were)* drilled at the factory in the rib, and a heavy attach angle on the effected R/H side. It would appear both L/H and R/H bell cranks would experience the same fore-aft forces by air loads on the flaps. *(Therefore...)*, why reinforce only one side? Is it possible the factory assembly line neglected to install an intended similar reinforcement on the R/H side?" *(Part total time for the second aircraft: 6,339.0 hours. SDRS returns two additional entries for this part number, three if you drop the last digit.)*

Part Total Time: 4,336.0 hours.

Cessna: 185A; Broken Alternator Bracket; ATA 2410

A mechanic says, "*(At an earlier date...)* I installed a Plane Power Alternator Conversion Kit (STC SA10682SC) on this aircraft. During an oil change I found the alternator bracket *(Plane Power P/N 10-9003)* cracked totally in half. This alternator had only been in use for three weeks at approximately 45 hours."

Part Total Time: 45.0 hour (approximately).

DASSAULT

Dassault: 2000; Failed Emergency Handle Solder Joints; ATA 5220

A repair station technician states, "The access cover for the emergency window handle does not have a *(support)* lanyard. When it is removed, the cover hangs by the wiring that illuminates *(the handle assembly)*, putting stress on the solder connections for the handle lighting. This causes the connections to break, creating either an inoperative emergency light or a short—*(resulting)* in more than one emergency light *(failing)* to illuminate. This cover is removed routinely for security pinning of the exit handle and for emergency window handle inspection. There should be a lanyard to provide stress relief for the associated wiring mounted on the cover and in the window assembly." *(No part number was provided with this report.)*

Part Total Time: (unknown).

DIAMOND

Diamond: DA40; Chafing Intake/Inlet Ring; ATA 7160

"While performing a 100 hour inspection," writes a mechanic, "fine metal particles were discovered covering the throat and valve of the fuel injection servo (P/N 2576568-1). The servo was sent to a repair facility to determine whether or not any of the metal particles entered the servo's blast tubes. It has been determined the metal originated from the chafing of the loose fitting inlet ring (item 220; P/N 7166-20-31) within the flange (item 20; P/N 7166-20-33). The loose fit is due to manufacturing. Diamond Aircraft has not come up with a fix as of this date. For now we are cementing the inlet ring to the flange while awaiting a permanent fix."

Engine Fuel and Control - Lycoming

Diamond AIRCRAFT

DA40 IPC

N1030V

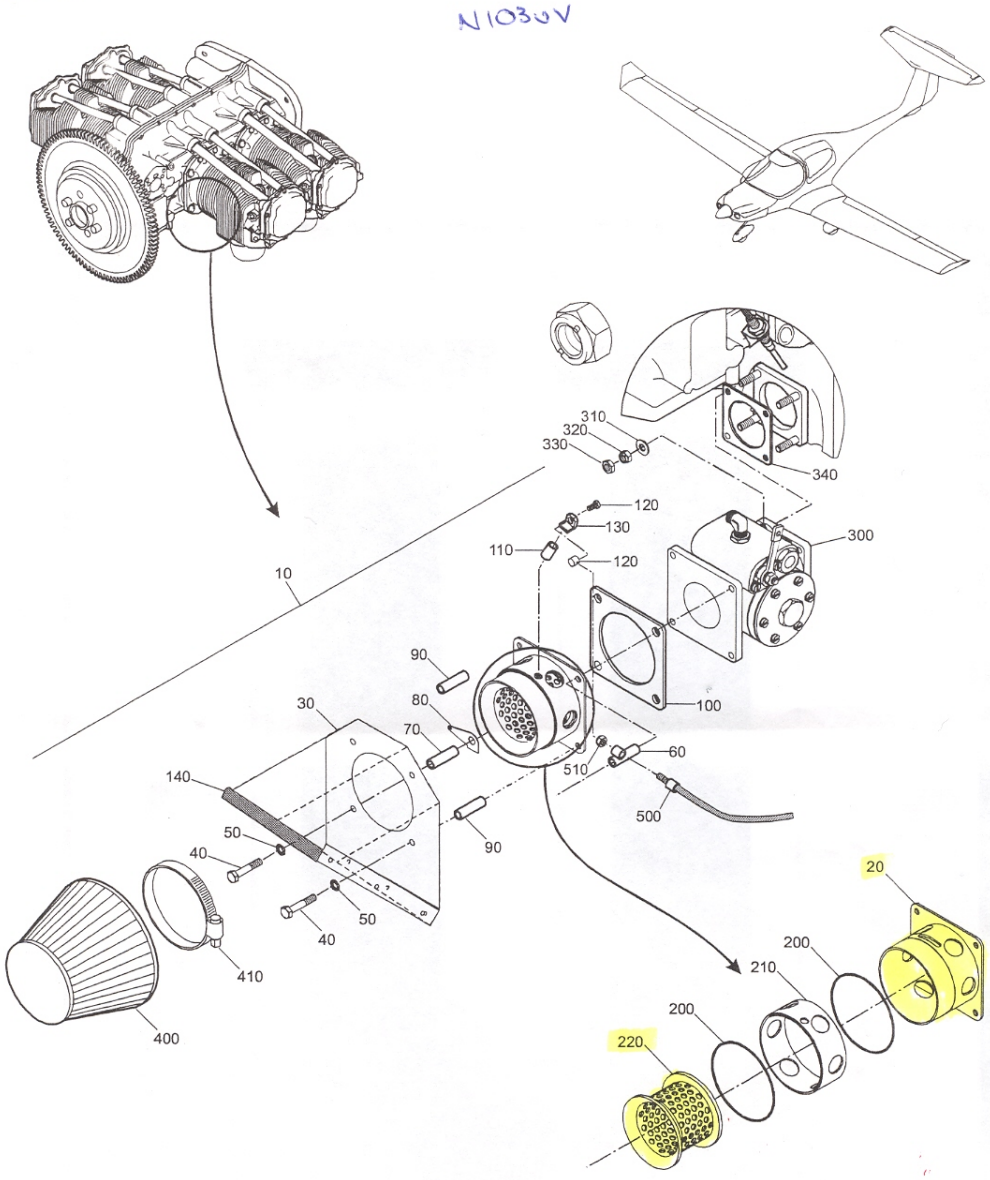

FIG. 01 ENGINE FUEL AND CONTROL - INJECTOR AND AIR FILTER

Doc # 6.03.01

Page: 02
19 Feb 01

73-00

Rev 0

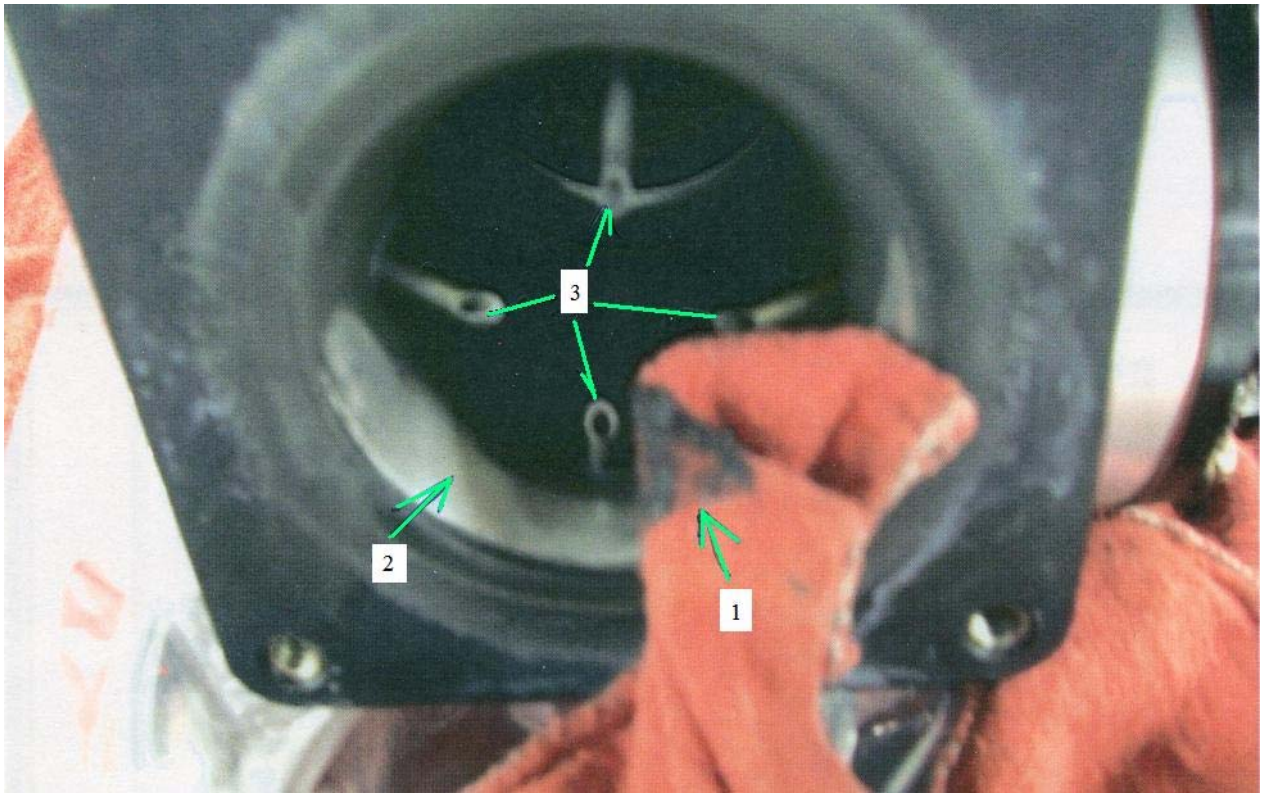

"Here you can see the metal adhering to the rag (1), and the resulting clean area at the inlet of the fuel injection servo (2). The particles coated the entire length of the throat and valve. We were concerned metal may have been ingested into the blast tubes (3). Upon inspection *(by an overhaul facility)*, it was found that no metal had entered the blast tubes."

Part Total Time: 686.5 hours.

PIPER

Piper: PA28-151; Corroded Wing Attach Fittings; ATA 5341

An unknown submitter writes, "This fuselage rear wing attach fitting *(P/N 62448-003)* was being replaced due to corrosion pits on the front surface. Upon removal some severe pitting was noted just inboard of the 5/16 inch wing attach bolt hole on the rear side of the fitting. This area is exposed to outside air and moisture and is located in a difficult area to inspect. This area is also more critical *(with respect to)* eventual part failure than the front surface *(which remains)* visible from the inside of the fuselage. I recommend cleaning dirt out of this area and inspecting with a good light."

Part Total Time: (unknown).

Piper: PA28-181; Cracked Rudder Support Assembly; ATA 2720

A technician at a repair station writes, "*(I)* found the aft 'Z' *(rudder pedal)* assembly cracked (P/N 62664-000). The 'Z' assembly is riveted to the top forward end of the tunnel plate (P/N 62601-003) and acts as an attachment point for the rudder bar support assembly (P/N 63451-000) using four standard AN3-4A bolts—which are secured through nut plates that are riveted on both fore and aft 'Z' assemblies.

"This cracking is possibly caused by looseness in the toe brake support brackets (P/N 63468-0000) on both pilot and co-pilot's side. The standard AN3-13A bolts used to attach these toe brake support brackets loosen over time and cause loss of support to the rudder pedal bar assembly (P/N 63420-000). This flexing transfers down to the 'Z' assemblies, causing metal fatigue and subsequent cracking. I recommend periodic re-torquing of the toe brake support bracket bolts." *(Provided fuselage station: 48.60.)*

Part Total Time: 5,820.4 hours.

AIR NOTES

INTERNET SERVICE DIFFICULTY REPORTING (iSDR) WEB SITE

The Federal Aviation Administration (FAA) Internet Service Difficulty Reporting (iSDR) web site is the front-end for the Service Difficulty Reporting System (SDRS) database that is maintained by the Aviation Data Systems Branch, AFS-620, in Oklahoma City, Oklahoma. The iSDR web site supports the Flight Standards Service (AFS), Service Difficulty Program by providing the aviation community with a voluntary and electronic means to conveniently submit in-service reports of failures, malfunctions, or defects on aeronautical products. The objective of the Service Difficulty Program is to achieve prompt correction of conditions adversely affecting continued airworthiness of aeronautical products. To accomplish this, Malfunction or Defect Reports (M or Ds) or Service Difficulty Reports (SDRs) as they are commonly called, are collected, converted into a common SDR format, stored, and made available to the appropriate segments of the FAA, the aviation community, and the general public for review and analysis. SDR data is accessible through the “Query SDR data” feature on the iSDR web site at: http://av-info.faa.gov/isdr/.

In the past, the last two pages of the Alerts contained a paper copy of FAA Form 8010-4, Malfunction or Defect Report. To meet the requirements of *Section 508, this form will no longer be published in the Alerts; however, the form is available on the Internet at: http://forms.faa.gov/forms/faa8010-4.pdf. You can still download and complete the form as you have in the past.

*Section 508 was enacted to eliminate barriers in information technology, to make available new opportunities for people with disabilities, and to encourage development of technologies that will help achieve these goals.

A report should be filed whenever a system, component, or part of an aircraft, powerplant, propeller, or appliance fails to function in a normal or usual manner. In addition, if a system, component, or part of an aircraft, powerplant, propeller, or appliance has a flaw or imperfection, which impairs or may impair its future function, it is considered defective and should be reported under the Service Difficulty Program.

The collection, collation, analysis of data, and the rapid dissemination of mechanical discrepancies, alerts, and trend information to the appropriate segments of the FAA and the aviation community provides an effective and economical method of ensuring future aviation safety.

The FAA analyzes SDR data for safety implications and reviews the data to identify possible trends that may not be apparent regionally or to individual operators. As a result, the FAA may disseminate safety information to a particular section of the aviation community. The FAA also may adopt new regulations or issue airworthiness directives (ADs) to address a specific problem.

The iSDR web site provides an electronic means for the general aviation community to voluntarily submit reports, and may serve as an alternative means for operators and air agencies to comply with the reporting requirements of 14 Title of the Code of Federal Regulations (CFR) Section 121.703, 125.409, 135.415, and 145.221, if accepted by their certificate-holding district office. FAA Aviation Safety Inspectors may also report service difficulty information when they conduct routine aircraft maintenance surveillance as well as accident and incident investigations.

The SDRS database contains records dating back to 1974. At the current time, we are receiving approximately 40,000 records per year. Reports may be submitted to the iSDR web site on active data entry form or submitted hardcopy to the address below.

The SDRS and iSDR web site point of contact is:

Pennie Thompson
Service Difficulty Reporting System, Program Manager
Aviation Data Systems Branch, AFS-620
P.O. Box 25082
Oklahoma City, OK 73125
Telephone: (405) 954-1150
SDRS Program Manager e-mail address: 9-AMC-SDR-ProgMgr@faa.gov

IF YOU WANT TO CONTACT US

We welcome your comments, suggestions, and questions. You may use any of the following means of communication to submit reports concerning aviation-related occurrences.

Editor: Daniel Roller (405) 954-3646
FAX: (405) 954-4570 or (405) 954-4655

E-mail address: Daniel.Roller@faa.gov

Mailing address: FAA, **ATTN: AFS-620 ALERTS**, P.O. Box 25082, Oklahoma City, OK 73125-5029

You can access current and back issues of this publication from the internet at: http://av-info.faa.gov/. Select the General Aviation Airworthiness Alerts heading.

AVIATION SERVICE DIFFICULTY REPORTS

The following are abbreviated reports processed for the previous month, which have been entered into the FAA Service Difficulty Reporting (SDR) System database. This is not an all-inclusive listing of Service Difficulty Reports. For more information, contact the FAA, Regulatory Support Division, Aviation Data Systems Branch, AFS-620, located in Oklahoma City, Oklahoma. The mailing address is:

FAA
Aviation Data Systems Branch, AFS-620
PO Box 25082
Oklahoma City, OK 73125

To retrieve the complete report, click on the Control Number located in each report. These reports contain raw data that has not been edited. Also, because these reports contain raw data, the pages containing the raw data are not numbered.

If you require further detail please contact AFS-620 at the address above.

Federal Aviation Administration

Service Difficulty Report Data

Sorted by aircraft make and model then engine make and model. This report derives from unverified information submitted by the aviation community without FAA review for accuracy.

Control Number	Aircraft Make	Engine Make	Component Make	Part Name	Part Condition
Difficulty Date	**Aircraft Model**	**Engine Model**	**Component Model**	**Part Number**	**Part Location**
CA081127010				SHAFT	CORRODED
6/11/2008				7635109028105	M/R GEARBOX

(CAN) EXCESSIVE CORROSION FOUND ON NEW QUILL SHAFT. MAIN GEARBOX O/H PN:76351-09500-044, SN:A081-00058 DURING CLEAN-UP AND INSP OF NEW QUILL SHAFT (PN, SN MENTIONED BELOW) MULTIPLE CORROSION PITTING CLUSTERS FOUND ON INTERNAL SPLINES AND ID OF PART. RETURN TO VENDOR FOR FULL WARRANTY UNSERVICEABLE QUILL SHAFT RETURN TO VENDOR AWAITING WARRANTY RMA NR COMPANY SQID NR 08-04306.

CA081201004				BOLT	MISSING
12/1/2008					STARTER

(CAN) STARTER CASE THROUGH BOLTS. BOLTS HAVE LOOSENED OFF TO THE POINT OF CAUSING ELECTRICAL SHORTING WITHIN THE STARTER DUE TO THE HALVES BEING LOOSE FROM EACH OTHER. ONE BOLT COMPLETELY MISSING. SPARKS AND ARCING VISUALLY OBSERVED AT BENDIX HSG DURING STARTER OPERATION.

CA081202001				TIRE	BULGED
12/1/2008				301003530	MLG

(CAN) A BULGE WAS NOTICED ON THE TIRE DURING A PRE-FLIGHT INSP. SUBSEQUENT INSP UPON REMOVAL REVEALED A RIP IN THE INNER TIRE CARCASS.

CA081203004				SPINDLE	UNSERVICEABLE
11/18/2008			S61TRH	S611033406101	TAIL ROTOR

(CAN) S61 TAIL ROTOR SPINDLE FAILED NITAL ETCH INSP IAW SB61B10-18J S/N`S K071-00144, K071-00132, K071-00137.

CA081203006				SPINDLE	UNSERVICEABLE
12/2/2008				S611033406	TAIL ROTOR

(CAN) S61 TAIL ROTOR SPINDLE FAILED INITIAL ETCH INSP IAW SB61B10-18J S/N`S K071-00394, K071-00392.

2008FA0000909		ALLSN		SEPARATOR	BROKEN
8/25/2008		T63A720		23038229	AIR/OIL

CUSTOMER HAD CHIP LIGHT INDICATING METAL GENERATION IN ENG. INVESTIGATION/ DISASSEMBLY REVEALED THE AIR OIL SEPARATOR GEAR WAS BROKEN AT GEARFACE TO SHAFT LOCATION (WHERE THE 16 DRILLED HOLES CONVERGE AT GEAR CTR). THIS IS THE 4TH OR 5TH AIR OIL SEPARATOR GEAR I`VE SEEN BROKEN LIKE THIS IN 7-8 YEARS. WHEN THE GEAR BREAKS, IT GENERATES METAL BUT DOESN`T FAIL IN OPERATION, BUT THEN THE GEARBOX IS OPENED THE GEAR COMES OUT IN TWO PIECES. (THE GEAR IS SUPPORTED BY A BEARING ON EITHER END AND IN OPERATION THE BROKEN GEAR IS HELD TOGETHER BY THE SANDWICH FIT CREATED BY THE GEARBOX IT OPERATES IN). THE PROBABLE CAUSE FOR THE REPEATED FAILURES IS POSSIBLY THE DESIGN. THE GEAR HAS 16 HOLES DRILLED INTO IT AND THEY CONVERGE AT THE CTR OF THE GEAR WHICH IS WHERE THE SHAFT FAILS. POSSIBLE FIX COULD BE TO REVIEW THE DWGS AND REDESIGN OR BEEF-UP THE WEAK POINT OF THE GEAR. (K)

CA081201005		GARRTT		GASKET	LEAKING

11/30/2008	TPE33110UA	31037505	ENGINE

(CAN) THIS ENG WAS NOTED TO HAVE A OIL LEAK COMING FROM THE BOTTOM OF THE DIAPHRAGM AT THE 2 BOTTOM BOLT HOLES CLOSEST TO THE CHIP DETECTOR. THE GASKET WAS NOTED TO BE STICKING OUT AND NOT SEALING PROPER. UPON FURTHER INVESTIGATION THE OLD STYLE GASKETS PN 3103750-1/-3/-4 WERE CHANGED UP TO A 3103750-5 TO PREVENT THIS ISSUE. REF: SB TPE331-72-2084 FOR THE UPGRADED GASKETS. THE 3103750-5 GASKET WAS INSTALLED ONLY 23.5 HRS PRIOR TO THIS OIL LEAK AT A REPAIR. THE CASE BOLTS WERE CHECKED AND WERE AT THERE PROPER TORQUE.

CA081202003	PWA	RETAINING RING	DAMAGED
11/6/2008	PT6A114A	311074102	TURBINE SECTION

(CAN) ENGINE WAS RECEIVED FOR INVESTIGATION/REPAIR DUE TO SHIFTING OF CT SHROUD SEGMENTS. THE CT SHROUD SEGMENT-RETAINING RING WAS OF POST SB 1627 CONFIGURATION AND THE CT SHROUD SEGMENTS (P/N 3035673CL12) POST SB 1628. DURING INVESTIGATION, HEAVY RUB SPOTS WERE NOTED ON QTY. 1-CT SHROUD SEGMENT AND ALL THE CT BLADES. THE CT SHROUD SEGMENTS RETAINING RING WAS FOUND DISENGAGED FROM THE RETAINING CAVITY OF CT SHROUD HSG, CAUSING LOOSENING AND DROOPING OF CT SHROUD SEGMENT. THIS RESULTED IN HEAVY RUB BETWEEN THE CT BLADES AND SHROUD SEGMENT. THE CT TIP CLEARANCES WERE INCREASED TO APPROX 0.048 INCH, WHICH ADVERSELY AFFECTED ENGINE PERFORMANCE. NO CURLING/BOWING OF CT SHROUD SEGMENTS WAS OBSERVED. NO OVER HEATING/BURNING OF HOT SECTION PARTS WERE NOTED. THE CMM INSPECTION OF THE CT SHROUD HOUSING WAS DONE AND ROUNDNESS OF ALL THE CRITICAL DIAMETERS WERE NOTED WITHIN O/H MANUAL LIMITS. THIS IS THE 1ST INCIDENCE THAT CAME TO ATTENTION WHERE A POST SB 1627 & 1628 HOT SECTION CONFIGURATION ENG HAS SUFFERED THE DISENGAGEMENT OF CT SHROUD SEGMENT RETAINING RING.

CA081125017	PWA	BLADES	FRACTURED
11/7/2008	PT6A28		COMPRESSOR

(CAN) DURING CRUISE AT FL170, THE LT ENG LOST POWER AND THE TEMP INCREASED TO 850 DEGREES C. (1) PASSENGER SAW FLAMES OUT THE EXHAUST. THE ENG WAS SHUTDOWN AND A SINGLE ENGINE LANDING FOLLOWED. POST FLIGHT INSP FOUND FRACTURED COMPRESSOR TURBINE BLADES. THE ENG WILL BE INVESTIGATED AT IN PRESENCE OF A MFG REP AND UPDATES WILL BE PROVIDED.

CA081125018	PWA	BLADES	FAILED
11/16/2008	PT6A6		POWER TURBINE

(CAN) ACFT TYPE ID PC-9. WHILE APPLYING POWER DURING A TOUCH AND GO, THE ENGINE STARTED VIBRATING. THE PILOT REDUCED THE POWER TO IDLE AND ABORTED T/O. AS THE A/C SLOWED DOWN ON THE RUNWAY, OIL BEGAN TO SPRAY OVER THE CANOPY. ONCE CLEARED OF THE RUNWAY, THE PROPELLER SLOWED DOWN RAPIDLY AND THE ENG WAS IMMEDIATELY SHUTDOWN. POST FLIGHT INSP FOUND FRACTURED PT BLADES, THE EXHAUST DUCT HAS A HOLE THROUGH THE INNER "SKI JUMP", THE EXHAUST STACK HAS MULTIPLE HOLES AND DENTS AND THE ENGINE COWLING IS DENTED. MFG IS REQUESTED THE ENG BE FWD TO PLT 5 FOR INVESTIGATION.

CA081203010	AEROSP	PWA	WIRE HARNESS	DAMAGED
10/27/2008	ATR42*	PW127		ENGINE

(CAN) THE ENG EXPERIENCED REPEATED EVENTS OF TORQUE FLUCTUATIONS BETWEEN THE 20TH AND 24TH OF OCTOBER FOR WHICH TROUBLESHOOTING HAD BEEN DONE. ON OCT. 27, THE PROBLEM RE-APPEARED AND WAS ACCOMPANIED BY NO RESPONSE TO THROTTLE MOVEMENTS. THE ENGINE WAS SHUTDOWN AND RE-STARTED IN MANUAL MODE WITH NO FURTHER PROBLEMS TILL THE FLIGHT ENDED. FURTHER TROUBLESHOOTING LED TO THE REPLACEMENT OF THE FUEL CONTROL AND ENGINE WIRING HARNESS, WHICH HAVE BEEN SENT FOR INVESTIGATION. MFG WILL CONTINUE INVESTIGATING THE EVENT AND ADVISE OF ROOT CAUSE ONCE ESTABLISHED.

CA081204003	AEROSP	PWA	SENSOR	UNSERVICEABLE
12/4/2008	ATR42300	PW120	04820203	LT AILERON

(CAN) FDR CORRELATION CHECK REVEALED LT AILERON ROLL SENSOR UNSERVICEABLE. SENSOR INSPECTED. OPERATING CABLE FRAYED AND BINDING. SENSOR REPLACED.

CA081204005	AEROSP	PWA	BLADE	CRACKED
12/4/2008	ATR42300	PW120	SFA13MIROASK112	PROPELLER

(CAN) LEADING EDGE NICKEL SHEATH VISUALLY INSPECTED AND A CRACK NOTED. IF PRESSURE APPLIED TO BLADED CRACK BECAME MORE NOTICEABLE. BLADE REMOVED FROM SERVICE.

CA081029006	AEROSP	PWA	TURBINE	SEIZED
10/16/2008	ATR72201	PW124B		LT ENGINE

(CAN) DURING TAKEOFF, THE PILOT REPORTED LT ENG TQ INCREASE TO 109 PERCENT. THE PLA WAS MOVED TO GI BUT THE ENG SHUTDOWN ITSELF. THE ACFT WAS DIVERTED TO THE GATE. DURING TROUBLESHOOTING, THE ENG PARAMETERS WERE DOWNLOADED AND ANALYZED. REVIEW SHOWED A DROP OF NH FROM 92 PERCENT TO 0, AND FUEL FLOW REDUCING FROM 550 TO 300, AND THEN TO ZERO. THE NL SENSOR AND THE TMM CHIP DETECTOR WERE INSPECTED AND FOUND CONTAMINATED. THE STARTER GEN WAS REMOVED IN ORDER TO ROTATE THE HP SHAFT BUT THE HP TURBINE WAS SEIZED. BORESCOPE INSP PERFORMED AND CONFIRMED THAT THE HP TURBINE WAS NOT ROTATING. SUSPECTING DISTRESS IN THE TOWERSHAFT AREA, THE COVER OF THE AGB DRIVE WAS REMOVED. INSP SHOWED A TOWERSHAFT WITH SIGNIFICANT RADIAL CLEARANCE AND DAMAGED GEAR TEETH . IT WAS DECIDED TO REMOVE THE ENGINE AND SEND IT FOR REPAIR. MFG WILL CONTINUE INVESTIGATING THE EVENT AND ADVISE OF ROOT CAUSE ONCE ESTABLISHED.

CA081125020	AGUSTA	PWC	ENGINE	MAKING METAL
11/21/2008	A109E	PW206C		NR 2

(CAN) PILOT REPORTED NR 2 ENG CHIP LIGHT ILLUMINATED AT TOP OF CLIMBOUT, IMMEDIATELY FOLLOWED BY A SURGE AND POWER LOSS. PILOT PREPARED FOR A RUN-ON LANDING. NR 2 ENG WAS SECURED, PASSENGERS WERE BRIEFED AND TRAFFIC AND DISPATCH WERE ALERTED. NR 1 ENG WENT TO 124 PERCENT TORQUE AFTER NR 2 ENG POWER LOSS. SUCCESSFUL RUN-ON LANDING WAS ACCOMPLISHED AND ACFT WAS GROUND-TAXIED TO PARKING AREA. MFG WILL CONTINUE INVESTIGATING THE EVENT AND ADVISE OF ROOT CAUSE ONCE ESTABLISHED.

CA081202002	AIRBUS	CFMINT	STEERING SYS	MALFUNCTIONED
11/29/2008	A319114	CFM565A1	C247360011	NLG

(CAN) NW STEERING SWING TO THE LT DURING TO ROLL AT APPROX 100 KTS. NEEDED FULL RUDDER AND RT BRAKE TO MAINTAIN CENTERLINE. STEERING CONTROL UNIT 6GC REPLACED IAW MM S/N H0714.

2009FA0000012	AIRBUS	CFMINT	ECU	FAULTY
12/30/2008	A320214	CFM565B4P	2123M55P04	NR 2 ENGINE

FLIGHT 515 LAX TO JFK. DURING CRUISE 3 ECAM WARNINGS, THRUST LEVER FAULT, CTL VALVE FAULT, AND ENG2 FADEC A FAULT. AN ASSOCIATED LAND ASAP AMBER ECAM ADVISORY MSG ALSO APPEARED. CREW ADVISED DISPATCH THAT THEY WERE DIVERTING TO LAS. MX FOLLOWED THE TSM FOR THE FAULTS AND FOUND ENGINE 2 CHANNEL A NOT REPORTING DURING ECU TEST. THE ECU WAS REPLACED AND OPS CHECKED OK PER AMM 73-21-60. IAW THE OPERATORS RECORDS, ALL AIRWORTHINESS DIRECTIVES, SERVICE BULLETINS, STC`S AND PMA`S ARE IN FULL COMPLIANCE WITH THE TYPE DESIGN CERTIFICATE AND ASSOCIATED REGULATORY REQUIREMENTS. THE ACFT WAS RELOCATED BACK TO SFO. N632VA DEPARTED LAS AT 0741Z AND ARRIVED SFO AT 0842Z. NO FAULTS NOTED.

2008FA0000904	AMD	GARRTT	TURBINE BLADES	DAMAGED
12/9/2008	FALCON50MYST	TFE73140	30606266	NR 2 ENGINE

THE THIRD STAGE LP TURBINE DISK ON NR 2 ENG HAD A BLADE (PN 30606901) BREAK IN FLIGHT DAMAGING THE EXHAUST NOZZLE AND THE AFTER BODY OF THE ENG. THE BLADES OF THE TURBINE DISK HAD A 2500 HOUR MPI REQUIRED EDDY CURRENT INSP COMPLETED AT 2458.6 TSN AND 1979 CSN. THE NEXT INSP APPEARS TO BE DUE IN 216.5 HRS. (K)

CA081203005	BEECH	PWA	TURBINE	DAMAGED
5/2/2008	1900C	PT6A65B		RT ENGINE

(CAN) ACFT CRASHED UNDER UNKNOWN CIRCUMSTANCES. DURING THE FLT, THE PILOT RADIOED THAT HE HAD A LOSS OF PWR FROM ONE ENG FOLLOWED BY A "MAYDAY" CALL, APPROX 14 MIN LATER, DURING WHICH HE

SAID THE SECOND ENGINE STOPPED OPERATING. THE ACFT WAS EQUIPPED WITH A FDR AND CVR. EXAMINATION OF ENGINES, REVEALED THE LT ENGINE DISPLAYED ROTATIONAL SIGNATURES CHARACTERISTIC OF THE ENGINE DEVELOPING POWER AT IMPACT. NO PRE-IMPACT ANOMALIES EVIDENT. THE RT ENGINE DISPLAYED EVIDENCE OF PRE-IMPACT DISTRESS CONSISTING OF THE FRACTURE AND RELEASE OF COMPRESSOR TURBINE (CT) BLADE MATERIAL DUE TO CONTACT WITH A PROTRUDING CT BLADE SHROUD SEGMENT. THE CT DISK, VANE AND SHROUD ASSY WAS REQUESTED TO BE RETURNED TO MFG FOR DETAILED EXAMINATION. MFG WILL CONTINUE INVESTIGATING THE EVENT AND ADVISE OF ROOT CAUSE ONCE ESTABLISHED.

CA081030001	BEECH	PWA	CONTROLLER	SMOKE
10/12/2008	200BEECH	PT6A41	HYLZ503361	A/C SYSTEM

(CAN) THE FLIGHT CREW REPORTED SMOKE IN THE CABIN, THE ACFT LANDED SAFELY. MX INSPECTED AND SMOKE WAS THOUGHT TO BE COMING FROM THE VENT BLOWER, THE BLOWER WAS REPLACED, GROUND RUN-UP CHECK WAS CARRIED OUT AND NO SMOKE WAS EVIDENT COMING FROM AIR CONDITIONING SYS. DURING TEST FLIGHT, THERE WAS NO HEATING CONTROL IN AUTO MODE. THE SYS WAS SWITCHED TO MANUAL AND HEAT CONTROLLING WAS POSSIBLE. WHEN THE SYS WAS SWITCHED BACK TO AUTO, A SLIGHT BURNING SMELL WAS NOTICED BUT THERE WAS NO SMOKE IN THE CABIN. THE SYS WAS TURNED OFF AND THE ACFT RETURNED TO BASE. THE CABIN TEMP CONTROLLER WAS REMOVED AND INSPECTED. THERE WAS EVIDENCE OF DAMAGE AND ARCING ON THE UNIT AND IT WAS REPLACED AND THE ACFT RETURNED TO SERVICE.

CA081203001	BEECH	PWA	PROBE	SEPARATED
11/20/2008	300BEECH	PT6A60A	100380006119	RT AUX TANK

(CAN) DURING A 3RD PHASE 600 HR INSP, A SNAG WAS CREATED TO FIX A DISCREPANCY IN THE RT FUEL QUANTITY INDICATING SYS. THE RT FUEL TANK READING WAS 300 LBS LOW. MAINT INSPECTED SYS AND ISOLATED THE PROBLEM TO THE RT AUX FUEL TANK PROBE. UPON A CLOSER INSP IT WAS DISCOVERED THAT THE PROBE HSG AT SEPARATED FROM THE SENDING UNIT. THE PLASTIC RIVETS HAD SHEARED. THE PARTS WERE RECOVERED FROM THE AUX TANK AND WERE ALL ACCOUNTED FOR. A NEW SERVICEABLE UNIT WAS INSTALLED AND THE SYS WAS TESTED SERVICEABLE.

2008FA0000907	BEECH	CONT	CYLINDER	CRACKED
12/8/2008	35C33	IO470K	539491	ENGINE

ANNUAL INSP REVEALED A LARGE QUANITY OF VERY BLACK OIL RUNNING DOWN THE ENGINE MOUNT LEG AND AIRFRAME STRUCTURE. FURTHER INVESTIGATION FOUND THE LEAK TO ORIGINATE AT THE HEAD TO BARREL CONNECTIONS OF CYLINDERS NR 1, AND NR 3. COMPRESSION CHECK USING AN INPUT PRESSURE OF 80 PSI AND LEAK DETECTING SOLUTION SHOWED AIR TO BE LEAKING FROM THE CYLINDER HEAD TO BARREL CONNECTION. CYLINDERS WERE REMOVED AND INSPECTED BUT IT COULD NOT BE CONFIRMED IF CRACK EXISTED OR IF LEAK WAS THROUGH THE THREADS. THE LOW TIME ON NEW MFG CYLINDERS INDICATES THAT THE PROBLEM COULD BE IN THE MFG PROCESS. NOTE: ENGINE WAS REBUILT / ZERO TIMED USING NEW CYLINCERS ON 5/20/2001. (K)

2009FA0000010	BEECH		SWITCH	INTERMITTENT
1/12/2009	400A		45AS6101513	TE FLAP

INVESTIGATED A CREW REPORT OF THE FLAPS INTERMITTENTLY NOT RETRACTING PAST THE 10 DEGREE SETTING. DURING TROUBLESHOOTING FOUND THE P/N 45AS61015-13 RT FLAP FOLLOW-UP SWITCH ASSY. ELECTRICAL READINGS TO BECOME INTERMITTENT WHEN EXPOSED TO LOW TEMPERATURES. REPLACED THE RT FLAP FOLLOW-UP SWITCH ASSY WITH A SUPERSEDING P/N 45AS61015-23 SWITCH ASSY. AND ADJUSTED THE LT FLAP FOLLOW-UP SWITCH AS REQUIRED. FLAP SYS TESTS NORMAL. RECOMMEND MFG ISSUE A MANDATORY OR RECOMMENDED SB TO ESTABLISH A RECOMMENDED COMPLIANCE TIME FOR REPLACING OLDER STYLE FLAP FOLLOW-UP SWITCH ASSY'S WITH NEWER P/N FOLLOW-UP SWITCH ASSY'S.

2009FA0000020	BEECH		UPLOCK HOOK	DISENGAGED
12/24/2008	400A		45A3951141	NLG

AFTER DEPARTING, FLIGHT CREW OBSERVED RED LANDING GEAR UNSAFE LIGHT IN LANDING GEAR CONTROL HANDLE ILLUMINATED AFTER LANDING GEAR RETRACTION. RETURNED TO DEPARTURE. FOUND NLG UPLOCK HOOK NOT ENGAGING NOSE GEAR STRUT ASSY AS REQUIRED IAW MM 32-30-00. LANDING GEAR RETRACT/ EXTENSION SYS FUNCTION CHECKS IAW MM 32-00-00 OK. SUSPECT ADJUSTMENT CHANGED SLIGHTLY FROM AS-BUILT RIGGING DUE TO COMPONENTS WEARING IN, HAVE NOTED SIMILAR CONDITION PREVIOUSLY ON OTHER

LOW-TIME ACFT. (K)

CA081127005	BEECH		HUB	WORN
11/12/2008	56TC		E6468	PROPELLER

(CAN) PROPELLER CAME IN FOR SHIFTED PRELOAD PLATES. HUB DID NOT SEEM TO SEAL (MATE) PROPERLY. THERE WERE HEAVY WEAR MARKS ON THE CENTER SECTION OF THE MATING SURFACES ONLY. TEFLON WAS WORN THROUGH ON ALL (4) BLADES. ONE OTBD BRG RACE WAS BADLY CHIPPED AND SHOWED SIGNS OF CRACKING.

2008FA0000925	BEECH		VENT LINE	LEAKING
12/15/2008	58		6017001079	RT WING

FOUND RT WING FUEL VENT CONSTANTLY LEAKING FUEL. OPENED RT WING TIP FILLER CAP AND BLEW AIR THROUGH THE VENT SYSTEM AND BUBBLES WERE SEEN IN THE LOWER END OF THE FUEL TANK WHERE THE VENT TUBE PASSES THROUGH THE FUEL TANK BULKHEAD. USED ACFT MM TO FABRICATE A HOLE IN FUEL CELL TO GAIN ACCESS TO THE LEAKING TUBE AND APPLIED PRO SEAL TO SEAL THE TUBE TO THE BUSHING WHERE THE LEAK WAS OBSERVED. (K)

2008FA0000905	BEECH	CONT	CYLINDER	SEPARATED
12/1/2008	58	IO550C	ECC712CN	ENGINE

NR 1 CYL FAILED, HEAD SEPARATED FROM BARREL. ALL CYL, WERE OVERHAULED, 5/12/2004, 817.5 HRS AGO. (K)

2009FA0000019	BEECH	CONT	TUBE	CHAFED
1/20/2009	58	IO550C	9696001115	FEATHERING SYS

A HOLE WAS CHAFED IN THE RT PROPELLER UNFEATHERING ACCUMULATOR TUBE BY THE NR6 CYLINDER HEAD TEMPERATURE WIRE. BOTH THE TUBE AND WIRE NEED TO BE SEPARATED AND SECURED TO PREVENT CONTACT.

2009FA0000007	BEECH		ACTUATOR	FAILED
12/15/2008	A35		35810080602	MLG

INTERNAL FAILURE WITHIN LANDING GEAR ACTUATOR GEARBOX. GEAR WOULD NOT CYCLE DOWN BY NORMAL OR EMERGENCY EXTENSION. EMERGENCY HANDLE WOULD NOT ENGAGE. COMPONENT WAS OVERHAULED IN 1983.

2009FA0000009	BEECH	CONT	FAIRING	CRACKED
1/15/2009	A36	IO550B	36555010115	ZONE 100

AIR CONDITIONER CONDENSER L/E FAIRING WAS CRACKED ALL THE WAY ACROSS. THE CRACK RAN THE ENTIRE WIDTH OF THE FAIRING THROUGH THE MOUNTING SCREW HOLES. THE ONLY THING HOLDING IT ON WAS THE CONDENSER ACTUATOR ROD.

CA080303006	BEECH	LYC	STATIC PORT	OBSTRUCTED
3/3/2008	B23	O360A2G		RT

(CAN) WHILE DOING A PRE-PURCHASE INSP, DISCOVERED A PIECE OF TAPE COVERING THE RT STATIC PORT.

2009F00002	BEECH		WINDSHIELD	CRACKED
12/21/2008	C90		10138402522	COCKPIT

ACFT LEVELED OFF AT 20,000 FT AFTER APPROX 45 MIN OF FLIGHT, THERE WAS A SUDDEN BANG, AND CO-PILOTS WINDSHIELD INNER PANE SPIDER WEB CRACKED. FLT CREW DIVERTED TO NEAREST AIRPORT AND LANDED WITHOUT FURTHER INCIDENT.

2009FA0000025	BEECH	CONT	METERING UNIT	MALFUNCTIONED
1/7/2009	F33A	IO520BB	631415A8	FUEL ENGINE

WHILE ON A TRAINING MISSION, THE PILOT NOTICED THE FUEL FLOW WAS 18 GPH DURING CLIMB, PILOT REPORTED FUEL FLOW WAS NORMAL ON TAKEOFF. ON TROUBLESHOOTING, THE MX FOUND THE ARM ON THE

MIXTURE SIDE WAS VERY ROUGH. FUEL METERING UNIT WAS REPLACED AND RUN-UP WAS PERFORMED, OPS CHECK GOOD. NO PROBABLE CAUSE OR RECOMMENDATIONS AT THIS TIME. (K)

2009FA0000026	BEECH	CONT	PUMP	LOW PRESSURE
12/24/2008	F33A	IO520BB	AA3216CW	

PILOT REPORTED INSTRUMENT AIR PRESSURE LOW AT IDLE ON RUN UP. ON TROUBLESHOOTING, THE MECHANIC DETERMINED THE AIR PUMP WAS NOT PRODUCING ENOUGH PRESSURE AT IDLE. NO PROBABLE CAUSE OR RECOMMENDATIONS AT THIS TIME. (K)

2008FA0000897	BELL	BELL	BOLT	DEBONDED
12/14/2008	206L3		206011135005	MAIN ROTOR

MAIN ROTOR BLADE BOLT LWR PLUG, PN 206-011-137-001, FELL OUT ON ENG SHUTDOWN WHEN ROTOR RPM DROPPED BELOW 40 PERCENT. THIS ALLOWED LEAD BALANCE WEIGHTS TO ALSO FALL OUT OF BOLT. THIS PLUG IS BONDED INTO THE BOLT AT MFG AND APPEARS TO NOT HAVE HAD ADEQUATE ADHESIVE APPLIED.

CA081120005	BOEING	RROYCE	BLEED VALVE	BROKEN
11/6/2008	717200	BR700715A130	BRH10211	ENGINE

(CAN) IT HAS BEEN REPORTED BY OPERATOR THAT BVV LEVER WAS NOT OPERATING PROPERLY. ENG WAS REMOVED IN UNSERVICEABLE CONDITION DUE TO BOOSTER BLEED VALVE MECHANISM MALFUNCTION. ENG IN RRC FOR REPAIR. DURING INITIAL INSP, IT WAS CONFIRMED THAT BOOSTER BLEED VALVE RING ASSY (ATA 72-38-19 01-400) WAS NOT OPERATING PROPERLY. STRIP WAS CARRIED OUT TO EXPOSE THE BOOSTER BLEED VALVE MECHANISM AND IT WAS NOTED THAT ONE PIN (ATA 72-38-19 01-408) AND ONE RETAINING RING (ATA 72-38-19 01-409) WERE MISSING. THIS PIN IS AT THE CONNECTION BETWEEN THE BELL CRANK LEVER ASSY (ATA 72-38-19 01-100) AND THE BOOSTER BLEED VALVE RING ASSY (ATA 72-38-19 01-409) AT TOP DEAD CENTER POSITION (ACTUATING ROD POSITION). (6) REMAINING PINS WERE CORRECTLY INSTALLED WITH RETAINING RING PROPERLY SECURED. IN (2) RETAINING RINGS (ATA 72-38-19 01-381) AT SPRING SUPPORT ASSEMBLIES WERE ALSO FOUND MISSING AT POSITION 5 AND 6. SEVERE WEAR WAS NOTED AT PIN LOCATION OF BOTH AFFECTED SPRING SUPPORT ASSEMBLIES (ATA 72-38-19 01-370). BOTH FOLLOWER PINS (ATA 72-38-19 01-383) WERE STILL IN PLACE AT BOTH AFFECTED LOCATIONS.

2009FA0000003	BOEING	BRAKE ASSY	DAMAGED
1/5/2009	727*	211473	ZONE 700

BRAKE, WHEEL, AND TIRE CAME INTO THE SHOP WITH SEVERE DAMAGE THAT OCCURRED WHILE INSTALLED ON THE ACFT. ACCORDING TO THE PRELIMINARY INSP PERFORMED IN THE SHOP, THE BRAKE'S, NR5 ROTOR LINK BROKE, CAUSING THE ROTOR TO SPREAD AND CAUSE DAMAGE NOT ONLY TO THE BRAKE, BUT TO THE WHEEL. ACCORDING TO EXPERIENCED SHOP INSPECTORS, THIS IS NOT AN UNCOMMON OCCURRENCE WITH THIS PN BRAKE. THE WHEEL IS LIKELY TO BE SCRAPPED.

R5KB20081220001	BOEING	WEB	CORRODED
12/20/2008	727212		BS 1213

WEB CORRODED AT BS 1213 WL 177 RBL 5.

CA081201012	BOEING	PWA	ACTUATOR	WORN
11/29/2008	727225	JT8D9A	651781412	STEERING UNIT

(CAN) A "CLUNK" IN THE NOSE WHEEL STEERING TILLER WAS REPORTED. BOTH STEERING ACTUATOR ROD ENDS WERE FOUND PULLING OUT OF THE PISTONS. BOTH STEERING ACTUATORS WERE REPLACED. A/C RETURNED TO SERVICE.

DU4R2008277	BOEING	SKIN	DENTED
12/16/2008	75723APF		BS 1125

DURING SCHEDULED INSPECTION, FOUND DENT IN EXT. FUSELAGE SKIN BS 1125, S-10L LAP SEAM.

DU4R2008281	BOEING	SKIN	CORRODED
12/16/2008	75723APF		BS 1932-1936

DURING SCHEDULED INSPECTION, FOUND CORROSION ON EXT SKIN AROUND APU OIL FUEL DRAIN MAST RT APD ACCESS DOOR.

DU4R2008283	BOEING	STRAP	CORRODED
12/10/2008	75723APF	148N31388000	ZONE 300

DURING SCHEDULED INSPECTION, FOUND HEAVY CORROSION ON 2 EA. SUPPORT STRAPS REMOVED FROM BS 1825, B/O 0, RT SIDE TO HORIZ STAB.

DU4R2008276	BOEING	SKIN	DENTED
12/16/2008	75723APF		BS 600-612

DURING SCHEDULED INSPECTION, FOUND 3 EA. DENTS IN LOWER FWD FUSELAGE BELOW MLG DOOR SCUFF PLATE BS 600-612.

DU4R2008275	BOEING	SKIN	CORRODED
12/16/2008	75723APF		LT WING

DURING SCHEDULED INSPECTION, FOUND LT WING HAD CORROSION IN UPPER SKIN AT ALL VORTEX GENERATORS

DU4R2008284	BOEING	SPAR	CORRODED
12/17/2008	75723APF	112N100217	ZONE 500

DURING SCHEDULED INSPECTION, FOUND CORROSION ON WEB, LT WING REAR SPAR, ABOVE LT AFT BOOST PUMP WS 188

DU4R2008278	BOEING	SKIN	DAMAGED
12/16/2008	75723APF		BS 1364-1410

DURING SCHEDULED INSPECTION, FOUND NUMEROUS CREASES IN EXT. FUSELAGE SKIN BS 1364 - 1410, S-26L TO S-26R

DU4R2008282	BOEING	SUPPORT	CORRODED
12/17/2008	75723APF		BS 1098

DURING SCHEDULED INSPECTION, FOUND CORROSION ON WING TO BODY FAIRING SUPPORT ABOVE RT WING AT BS 1098.

DU4R2008279	BOEING	SPAR	CORRODED
12/17/2008	75723APF		LT WING

DURING SCHEDULED INSPECTION, FOUND CORROSION ON LT WING REAR SPAR BELOW LEFT AFT BOOST PUMP RSS 185.

DU4R2008280	BOEING	KEELBEAM	CORRODED
12/17/2008	75723APF		BS 996

DURING SCHEDULED INSPECTION, FOUND CORROSION ON KEELBEAM LOWER SURFACE CROSS BRACE AT BS 996.

DU4R2008273	BOEING	KEELBEAM	CORRODED
12/13/2008	75723APF		BS 956

DURING SCHEDULED INSPECTION AT TIMCO-LCQ, LAKE CITY, FL FOUND KEEL BEAM LOWER SURFACE CORSS BRACE HAS CORROSION AT BS 956 S/O 318002 N/R #35360

DU4R2008274	BOEING	KEELBEAM	CORRODED
12/13/2008	75723APF		BS 1040

DURING SCHEDULED INSPECTION, FOUND KEELBEAM LOWER SURFACE CROSS BRACE HAS CORROSION AT BS 1040.

DU4R2008285	BOEING		SKIN	CORRODED
12/28/2008	75723APF			ZONE 900

DURING SCHEDULED INSPECTION, FOUND CORROSION IN SEVERAL AREAS OF UPPER SURFACE SKINS ON LT HORIZONTAL STABILIZER.

7A7B20091192	BOEING	PWA	SLIDE	UNWANTED DEPLOY
1/18/2009	767238	JT9D7R4D	101630305	LT OVERWING

UNCOMANDED DEPLOYMENT OF OFF WING EVACUATION SLIDE.

2008F00026	BOLKMS		FRAME	CRACKED
12/16/2008	BK117B1		117223121151	ZONE 200

DURING INSP FOUND SPIDER CRACKS AROUND 1 RIVET ON THE DECK UNDER THE TANDEM HYD PACK. FURTHER INSP FOUND 2 FRAMES CRACKED UNDER THE HYD DECK.

CA081203003	BOMBDR	PWC	ENGINE	MALFUNCTIONED
11/25/2008	DHC8400	PW150A		

(CAN) SHORTLY AFTER TAKE OFF OIL MIST IN CABIN WAS DETECTED. THE ACFT IMMEDIATELY TURNED BACK, DECLARED AN EMERGENCY, AND LANDED. THE LOCAL AIRWORTHINESS AUTHORITIES ARE INVESTIGATING THE EVENT. POST FLIGHT INSP REVEALED OIL IN THE VICINITY OF THE P2.2 BLEED VALVE. INSP AND BORESCOPE SHOWS LP COMPRESSOR AND BLEED VALVES WET. NO EVIDENCE OF DISTRESSED COMPONENTS. EMU DATA REQUESTED. ENGINE BEING REMOVED FOR INVESTIGATION AT MFG. UPDATES WILL BE PROVIDED.

CA081126002	BOMBDR	PWC	DOOR	NOT CLOSED
11/16/2008	DHC8400	PW150A		CARGO

(CAN) AIR TURNBACK: AFTER T/O FUSELAGE DOOR WARNING LIGHT CAME ON. AFT CARGO DOOR INDICATION. ON INSP AFTER LANDING IT WAS NOTICED THE THE AFT CARGO DOOR HANDLE WAS POPPED OUT. THE DOOR WAS CLOSED BUT NOT LOCKED. AFT CARGO DOOR WAS FUNCTIONED AND CLOSED AND LOCKED. SUSPECT THAT THE GROUND CREW DID NOT FULLY PUSH THE HANDLE INTO THE CORRECT POSITION.

CA081126003	BOMBDR	PWC	SENSOR	OUT OF RIG
11/24/2008	DHC8400	PW150A		DOOR LOCK

(CAN) AIR TURNBACK: FUSELAGE DOOR WARNING LIGHT IN FLIGHT. RIGGED EMERGENCY EXIT DOOR PROXIMITY SENSOR EDRCLLK IAW AMM 52-71-01. INDUCTANCE 8.600MH.

CA081126001	BOMBDR	PWC	CONTROL UNIT	FAILED
11/20/2008	DHC8402	PW150A	3985001007	RUDDER

(CAN) WHILE PERFORMING TASK 27-21-28-710-801 OPS TEST OF THE RUDDER SHUT-OFF VALVES, NR1 RUDDER SHUT-OFF VALVE FAILED TO CLOSE WHEN SELECTED OFF. THE FLIGHT CONTROL ELECTRONIC CONTROL UNIT (FCECU) WAS REPLACED. THE TASK WAS PERFORMED AND PASSED THE TEST. THE FCECU WAS TESTED IAW AMM 27-00-01.

2008F00027	BRAERO		CONNECTOR	DEFECTIVE
12/15/2008	HS125700A		MS3126F1415S	N1 INDICATOR

ON NOVEMBER 23, 2008, THE NR 2 ENGINE N1 GAUGE DIGITAL PORTION FAILED. THE MALFUNCTION WAS TRACED TO A DEFECTIVE CONNECTOR AT THE GAUGE.

2008FA0000923	BRAERO		AXLE	WORN
12/12/2008	HS125700A		25UN561	NLG

CONTINUOUS NOSE GEAR VIBRATIONS UPON LANDING. TEARDOWN AND INSPECTION OF NOSE GEAR AXLE BARREL ASSY REVEALED THE NOSE AXLE TO BE WORN BEYOND LIMITATIONS. (2) .005" GROOVES WORN INTO AXLE. (1) ON EACH SIDE WHERE THE AXLE BARREL COVER PLATE SEALS ARE LOCATED. NO WEAR IS PERMITTED AS PER THE OVERHAUL MANUAL. (K)

2008FA0000899	CESSNA	LYC	CRANKSHAFT	BROKEN
10/16/2008	152	O235L2C	13B21431	ENGINE

THE ENGINE WAS REMOVED DUE TO ABNORMAL NOISE AND ROUGHNESS, UPON TEARDOWN INSP, FOUND THE CRANKSHAFT BROKEN IN TWO AT THE CENTER MAIN BEARING AREA. THE CTR MAIN BRG SHOWED DISTRESS, BUT DID NOT INDICATE ANY LACK OF LUBRICATION. THE CRANKCASE HAD SLIGHT DAMAGE IN THE BEARING RETAINING AREA. THIS ENGINE HAD BEEN FACTORY OVERHAULED ON 7/14/06, AND PRESENTLY HAS 961.3 HOURS SINCE OVERHAUL. THE LOG BOOK DID NOT INDICATE ANY PROP STRIKE OR PROPELLER CHANGE. (K)

CA081201007	CESSNA	LYC	RUDDER BAR	CHAFED
11/28/2008	152	O235L2C	04115264	RT RUDDER

(CAN) SCREWS ATTACHING CENTER CONTROL CONSOLE COVER PN 0413463-5 WERE TOO LONG AND CHAFING IN TO THE RT SIDE OF THE RUDDER PEDAL TORQUE TUBE.

CA081201002	CESSNA	LYC	SWITCH	OVERHEATED
12/1/2008	172K	O320E2D	0713035	LANDING LIGHT

(CAN) LANDING LIGHT SWITCH MAY BE ORIGINAL (8865 HRS) DETENTS BECAME "STICKY" AND NOT AS POSITIVE AS NORMAL. SWITCH FUNCTION DID NOT FAIL. INSP REVEALED PWR SUPPLY WIRE END AND LUG ON SWITCH OVERHEATED. DISASSY SHOWED LUG CONTACT RIVET DETERIORATED AS WELL AS MYCARTA TYPE BOARD MATERIAL DISINTEGRATING DUE TO HEAT DAMAGE AROUND THE RIVET. MFG REQUIRES NEWER STYLE (1970 AND NEWER) LANDING LIGHT SWITCHES TO BE REPLACED EVERY 5 YEARS THIS OLDER STYLE SWITCH THOUGH LIKELY ABLE TO CARRY MORE CURRENT SHOULD BE INSPECTED VISUALLY ANNUALLY TO DETERMINE IF OVERHEATING IS AN ISSUE.

2008FA0000884	CESSNA	LYC	DISCHARGE TUBE	LOOSE
12/10/2008	172P	O320*	229164	FUEL PUMP

DURING 100 HR INSP, FOUND THE PUMP DISCHARGE TUBE ON A MA-4SPA LOOSE. THIS IS THE THIRD SUCH FIND. OTHER ACFT HAVE HAD THE PUMP DISCHARGE TUBE MISSING AND FOUND AT THE BOTTOM OF THE CARB AIRBOX.

2008FA0000920	CESSNA		ACTUATOR	CRACKED
12/16/2008	172RG		12810016	RT MLG

ON 7/08/2008, RT MLG NOT FULLY RETRACTED REPORTED BY ATC. THE PILOTS NOTICED THE RT MLG WAS NOT FULLY RETRACTED. THE LANDING GEAR WAS THEN EXTENDED, A DOWN AND LOCKED IND FOR GEAR WAS REPORTED. THE RT MLG ACTUATOR BODY (DATE STAMP OF AUG 21, 2001.) WAS FOUND CRACKED AT THE FWD BOLT HOLE ATTACH POINT. THE CRACK ALLOWED THE ACTUATOR SECTOR GEAR AND PISTON TO BECOME MISALIGNED. ACTUATOR SECTOR GEAR PN 988200202 AND PISTON ASSY PN 98820041 WERE FOUND TO BE DAMAGED. THIS ACTUATOR BODY WAS REPLACED WITH A NEW PART IAW SEB 01-2 R1 ON 10-11-2001 AT AN TT OF 5180.2. IT WOULD BE POSSIBLE FOR THIS DAMAGE TO PREVENT THE GEAR FROM TRAVELING TO THE FULL DOWN AND LOCKED POSITION RESULTING IN LOSS OF ACFT CONTROL DURING THE LANDING ROLL OUT. (K)

2008FA0000912	CESSNA	CONT	IGNITION SYS	DEFECTIVE
12/1/2008	182C	O470L		EGNINE

ENG RUNS ROUGH. ENG MISFIRES. HISTORY: 2/25/2004; TACH 487.1 - REPLACED LT AND RT MAGNETOS. ACFT RUN UP CHECKED OUT OK. 4/26/2004 TACH 508 - CHECKED TIMING. 05/11/2005 (NO TACH) - TROUBLESHOOTING ROUGH ENGINE. REMOVED INTAKE MANIFOLD AND FLAT SAND FLANGES AND REMOVE DENTS. REPLACE ALL INTAKE FLANGE GASKETS AND HOSES. PRESSURE TEST INTAKE MANIFOLD. REMOVE AND REPAIR MA4-5 CARB. RUNUP OK. 8/16/2007 TACH 542.7 - CHECK MAG TO ENG TIMING. RUN-UP AND LEAK CHECK OK. SOLUTION; TACH 573.8 USED DAIL INDICATOR AND FOUND THAT UTILIZING TIMING MARKS RESULTS IN 20+ DEGREE RETARDED IGNITION. USED DIAL INDICATOR TO SET PROPER TIMING AND ENGINES PERFORMS AS IT SHOULD. (K)

2009FA0000024	CESSNA	LYC	SERVO	LEAKING
12/4/2008	206H	IO540AC1A5	25765463	ENGINE

FUEL SERVO LEAKED WHILE ACFT WAS PARKED OVERNIGHT. THE MIXTURE WAS IN CUT OFF POSITION. FLIGHT MANUAL, SEC 4, NORMAL PROCEDURES PAGE 4-23 SECURING ACFT NR 10 STATES: FUEL SELECTOR VALVE RT

OR LT TO PREVENT CROSS FEEDING. IF THE FUEL SELECTOR VALVE WAS TURNED TO OFF, THIS WOULD HAVE PREVENTED. THERE IS A POTENTIAL FOR FUEL TO ENTER ENGINE CYLINDERS AND OIL SUMP IF THE FUEL SERVO MIXTURE CUT OFF LEAKS USING FLIGHT MANUAL PROCEDURES. NEED TO ADDRESS: FLIGHT MANUAL PROCEDURES TO FUEL SELECTOR VALVE OFF. (K)

2008FA0000928	CESSNA	LYC	MAGNETO	DAMAGED
12/30/2008	206H	TIO540AJ1A	66LC35SDNP	RIGHT

RT MAGNETO INTERMITTENT, MAGNETO STAYED HOT AND SOME TIMES IT WILL NOT HAVE ANY CURRENT GOING THROUGH. IF PROPELLER WAS MOVE IT WILL FIRE RT UP, AFTER REMOVED RT MAGNETO AND OPENED FOUND THAT THAT COIL HAS MELTED MOST OF THE GEARS AND CASING.

2008FA0000903	CESSNA	PWA	TUBE	LEAKING
12/8/2008	208B	PT6A114A	850108PR	TIRE

THE PILOT REPORTED A FLAT TIRE. MAINT FOUND AN INNER-TUBE LEAKING WITH NO APPARENT DAMAGE TO THE TIRE. THE TUBE WAS REPLACED WITH A NEW TUBE. SIX DAYS LATER THE SAME PILOT IN CHARGE OF THE SAME ACFT REPORTED THE SAME TIRE FLAT. MX AGAIN FOUND THE INNER TUBE FLAT WITH NO APPARENT SIGNS OF DAMAGE TO THE TIRE. A THROUGH INSP OF THE INNER-TUBE SHOWED PIECES OF WHAT APPEAR TO BE PAPER TOWEL EMBEDDED INTO THE RUBBER. THE FIRST TUBE WAS THEN INSPECTED WHICH SHOWED THE SAME MATERIAL EMBEDDED INTO IT. AN INSPECTION OF NEW STOCK SPARE INNER TUBES OF THIS TYPE THAT HAD NEVER BEEN ISSUED OUT, FOUND THE SAME MATERIAL EMBEDDED IN THEM ALONG WITH, IN SOME CASES, PIECES OF HARD MATERIAL. (K)

CA080225013	CESSNA	PWA	SPRING	WORN
2/20/2008	208B	PT6A114A	26410148	MLG

(CAN) ON JACKING THE ACFT, THE RT MAIN SPRING WAS FOUND TO BE LOOSE IN THE CTR SPRING TO SUCH AN EXTENT THAT MAINWHEEL COULD BE MOVED BACK AND FORTH .1250 ON AN INCH BEFORE THE REMOVAL BEGAN. UPON DISASSEMBLY THE MAIN SPRING WAS REMOVED BY HAND FROM THE CTR SPRING WITHOUT ANY PULLERS BEING USED. AMOUNT OF PLAY WHILE THE MAIN SPRING WAS STILL ASSEMBLED TO THE CTR SPRING SEEMED TO BE EXCESSIVE AND WAS NOT SOMETHING THAT WE HAD EXPERIENCED IN THE PAST. AFTER REMOVAL OF THE MAIN SPRING THE CTR SPRING WAS FOUND TO BE WITHIN LIMITS ON THE LT SIDE BUT OUT OF LIMITS ON THE RT SIDE. MAXIMUM DIAMETER MEASURED AT THE RT CENTER SPRING WAS 2.807 INCH, THE LIMIT IN THE MM IS 2.794 INCH. DURING A SEARCH OF THE ACFT RECORDS NO INCIDENTS OR REPAIRS WERE FOUND TO ACCOUNT FOR THE WEAR REPORTED.

2008FA0000911	CESSNA	CONT	ROD END	CRACKED
12/1/2008	310R	IO520M	HMX5FG	LT MLG

PILOT REPORTED NO LT GEAR DOWN LIGHT AND ALSO HEARD A LOUD BANG WHEN GEAR WAS RETRACTED. PILOT DID SEVERAL FLYBYS FOR MECHANICS ON GROUND, GEAR APPEARED TO BE DOWN. PILOT LANDED WITHOUT INCIDENT AND STOPPED ON RUNWAY. GEAR WAS NOT COMPLETELY LOCKED. GEAR WAS SECURED AND ACFT WAS TAXIED TO MAINT. WHEN PLACED ON JACKS, THE ROD END (HEIM END) ON THE IB LT MAIN GEAR PUSH PULL TUBE WAS FOUND TO HAVE THE BALL PULLED OUT OF THE ROD END. ROD END APPEARED TO HAVE A SMALL CRACKED WHERE IT FAILED. NOTE: ACFT HAD BEEN LANDED GEAR UP JAN O2. (K)

CA080305006	CESSNA	CONT	RESISTOR	OVERHEATED
11/30/2007	340A	TSIO520NB	OR551	HEATER BLOWER

(CAN) RESISTOR LOCATED UNDER CO-PILOT SEAT(CONTROLS HIGH LOW OPERATION OF HEATER BLOWER MOTOR. THERE ARE 3 RESISTORS OF THE SAME TYPE IN THIS LOCATION, IN THIS CASE HEATER RESISTOR-OR55-1 OVERHEATED CAUSING THE TY-RAP LOCATED ON THE UPPER PORTION OF RESISTOR TO MELT AND CATCH FIRE, THERE IS A SMALL SHIELD OF FLAME RESISTANCE MATERIAL ON THIS TERMIAL WHICH THE TY-RAP KEEPS IN PLACE. RECOMMEND THIS AREA BE CHECK TO THE HEAT BUILD UP OF THIS RESISTOR AS THIS WILL INDIACATE THE NEED TO BE CHANGED. RESISTOR WAS CHANGED AND THE NEW RESISTOR HL55-08-Z-1-OHM WAS FOUND AFTER A 30 MINUTE RUN THE TEMP WAS 123 FDEGREES AND THE OLD RESISTOR WAS 187F DEGRESS IN FREE AIR WITH THE SAME LOAD FACTOR,IN THE ENCLOSED SPACE I ASSUME THE TEMP WOULD RISE MORE THAN THAT,MUST ALSO BE NOTED A COMPLETE HAD BEEN INSTALLED ABOUT 77HRS PIOR TO THIS.

2008FA0000921	CESSNA	CONT	SPAR	CRACKED

12/10/2008	402B	TSIO520EB	522210003	LT WING

DURING ROUTINE INSP, CRACKS WERE OBSERVED IN THE LT AUXILARY SPAR. THE MAIN GEAR IS ATTACHED AT THE OTBD END. THE CRACKS WERE AT THE 11, 2, 5 AND 7 O`CLOCK POSITIONS OF THE HOLE WHICH THE WIRE BUNDLE PASSES THROUGH, AND WERE OF VARYING LENGTH. CRACKS WERE ALSO AT THE 7 AND 5 O`CLOCK POSITIONS OF THE LARGE ACCESS HOLE TO WHICH A COVER PLATE IS ATTACHED WITH A RING AND NUT PLATES OF THE OPPOSITE SIDE. THESE CRACKS WENT THROUGH THE SCREW HOLES AND EXTENDED UP TO 1.5 INCH. THE CRACKS WERE OBSERVED 1600 HOURS AFTER THE MAIN SPAR CAP MODIFICATIONS. SIMILAR CRACKS OF VARYING DEGREE HAVE BEEN OBSERVED IN 5 OF 8 ACFT. ALL HAVE THE MOD. IT IS NOT KNOWN IF THERE IS ANY CORROLATION. (K)

2008FA0000919	CESSNA	CONT	SPAR	CRACKED
12/10/2008	402B	TSIO520EB	52221003	LT WING

DURING ROUTINE INSP, CRACKS WERE OBSERVED IN THE LT AUXILARY SPAR. THE MAIN GEAR IS ATTACHED AT THE OTBD END. THE CRACKS WERE AT THE 11, 2, 5 AND 7 O`CLOCK POSITIONS OF THE HOLE WHICH THE WIRE BUNDLE PASSES THROUGH, AND WERE OF VARYING LENGTH WITH THE 2 LOWER HOLES CONTINUING INTO THE ACCESS HOLE. CRACKS WERE ALSO AT THE 7 AND 5 O, CLOCK POSITIONS OF THE LARGE ACCESS HOLE TO WHICH A COVER PLATE IS ATTACHED WITH A RIGN AND NUT PLATES ON THE OPPOSITE SIDE. THESE CRACKS WENT THROUGH THE SCREW HOLES AND EXTENDED UP T 2+ INCHES. THE CRACKS WERE OBSERVED 2671 HOURS AFTER THE MAIN SPAR CAP MODIFICATION. SIMILAR CRACKS OF VARYING DEGREE HAVE BEEN OBSERVED IN 5 OF 8 ACFT. ALL HAVE THE MOD. IT IS NOT KNOWN IF THERE IS ANY CORROLATION. (K)

2008FA0000922	CESSNA	CONT	SPAR	CRACKED
12/10/2008	402B	TSIO520NB	52221003	LT WING

DURING ROUTINE INSP, CRACKS WERE OBSERVED IN THE LT AUXILARY SPAR. THE MAIN GEAR IS ATTACHED AT THE OTBD END. THE CRACKS WERE AT THE 11,2,5 AND 7 O`CLOCK POSITIONS OF THE HOLE WHICH THE WIRE BUNDLE PASSES THROUGH, AND WERE OF VARYING LENGTH. CRACKS WERE ALSO AT THE 7 O`CLOCK POSITIONS OF THE LARGE ACCESS HOLE TO WHICH A COVER PLATE IS ATTACHED WITH A RING AND NUT PLATES ON THE OPPOSITE SIDE. THIS CRACK WENT THROUGH THE SCREW HOLE AND EXTENDED 1 INCH. THE CRACKS WERE OBSERVED 930 HOURS AFTER THE MAIN SPAR CAP MODIFICATION. SIMILAR CRACKS OF VARYING DEGREE HAVE BEEN OBSERVED IN 5 OF 8 ACFT. ALL HAVE THE MOD. IT IS NOT KNOW IF THERE IS ANY CORROLATION. (K)

2009FA0000014	CESSNA		ARM	BROKEN
12/10/2008	414			DOWNLOCK

ON LANDING, THE PILOT SELECTED THE GEAR DOWN AND NEVER GOT A GREEN DOWN AND LOCK LIGHT IN THE CABIN FOR THE RT MAIN GEAR. THE GEAR DOWNLOCK MICRO-SWITCH ACTUATOR ARM WAS BROKEN AND WOULD NOT ACTUATE THE MICRO-SWITCH. THESE ACTUATOR ARMS SEEM TO GET WEAK OVER TIME. THERE WAS NO OTHER REASON FOR THE ARM TO FAIL. (K)

2009FA0000016	CESSNA	CONT	PAN	CRACKED
12/17/2008	414A	TSIO550A	652969	ENGINE

OIL LEAK CAME FROM CRACK IN OIL PAN. CAUSE UNKNOWN. ENG TSMOH 95 HRS. CRACK/ FITTING WITH HOSE ATTACHED FOR REMOTE OIL DRAIN. (K)

2008FA0000924	CESSNA		CONTROL CABLE	FRAYED
12/1/2008	421B		500000066	LT AILERON CABLE

TT ON CABLES UNKNOWN SUSPECT ORIGINAL. FOUND LT AFT AILERON CABLE FRAYED AT WING STATION 58.94 THE PULLEY WAS FROZEN. INSPECTED REST OF SYSTEM NO DEFECTS FOUND. ON REPLACEMENT OF CABLE FOUND WAS ALSO FRAYED AT WING STA 87.29. THE PULLEYS AT THIS STATION WERE TURNING FREELY. WHEN INSTALLING NEW CABLE NOTICED THE FWD AILERON CABLE WITH BROKEN STRANDS ALSO AT WING STATION 87.29, ALSO REQUIRING CABLE REPLACEMENT. SUGGEST THAT EVERYONE BE REMINDED OF THIS LOCATION AND OF WING STATION 106.79 AS THESE ACCESS PANELS ARE IN WHEEL WELL WITH THE PULLEYS OFF TO THE SIDE AND DOWN THEY ARE A HARD AREA TO INSPECT, AND THE AILEREONS HAD TO BE MOVED TO THE TRAVEL LIMITS TO BE COMPLETELY INSPECTED, AS THE CABLES WERE BROKEN IN SMALL LOCALIZED SPOTS. (K)

2008FA0000926	CESSNA		CONTROL CABLE	FRAYED
12/1/2008	421B		500000067	LT AILERON

TT ON CABLES UNKNOWN SUSPECT ORIGINAL. FOUND LT AFT AILERON CABLE FRAYED AT WING STA 59 THE PULLEY WAS FROZEN. INSPECTED REST OF SYSTEM NO DEFECTS FOUND. ON REPLACEMENT OF CABLE FOUND WAS ALSO FRAYED AT WING STA 87.29. THE PULLEYS AT THIS STATION WERE TURNING FREELY. WHEN INSTALLING NEW CABLE NOTICED THE FWD AILERON CABLE WITH BROKEN STRANDS ALSOAT WING STATION 87.29, ALSO REQUIRING CABLE REPLACEMENT. SUGGEST THAT EVERYONE BE REMINDED OF THIS LOCATION AND OF WING STA 106.79 AS THESE ACCESS PANELS ARE IN WHEEL WELL WITH THE PULLEYS OFF TO THE SIDE AND DOWN THEY ARE A HARD AREA TO INSPECT, AND THE AILERONS HAD TO BE MOVED TO THE TRAVEL LIMITS TO BE COMPLETELY INSPECTED, AS THE CABLES WERE BROKEN IN SMALL LOCALIZED SPOTS. (K)

CA080226002	CESSNA	PWA	TUBE	DESTROYED
2/19/2008	425	PT6A112	0923150	NLG TIRE

(CAN) NOSE WHEEL BLEW OUT ON LANDING. TIRE AND RIM WERE INSPECTED FOR ANOMALIES WHICH WOULD CAUSE A BLOW OUT. NONE FOUND. THE TUBE IS SUSPECTED TO BE THE CAUSE OF CONCERN. ALSO UPON LANDING WITH A FLAT THE FENDER WAS DESTROYED AND THE TAXI LIGHT NEEDED TO BE REPLACED.

2009FA0000015	CESSNA		TUBE	BROKEN
12/30/2008	525		632750012	BRAKE SYS

DURING AN INSP, DOC 10, LANDING GEAR PNEUMATIC BRAKE SYS FUNCTIONAL CHECK ONE OF THE LINES IN THE RT LANDING GEAR WELL BLEW. FURTHER INVESTIGATION FOUND THAT THE 6327500-12 TUBE ASSY BROKE OFF AT THE FLARE ON THE INBD END OF THE TUBE ASSY. INSP OF THE SAME LINE ON THE LT SIDE FOUND NO DEFECTS. (K)

2008FA0000910	CESSNA		BOLT	INCORRECT
12/26/2008	550		AN721	ENGINE MOUNT

DURING UNSCHEDULED MAINT THE ENG WAS REMOVED FROM THE MOUNTS, (1) ENG MOUNT HAD THE HELICOIL PULL OUT OF THE CASTING NECESSITATING REPLACEMENT OF THE MOUNT. IT WAS ALSO DISCOVERED THAT ALL OF THE ENGINE MOUNT BOLTS WERE OF THE INCORRECT PN. ALL OF THE BOLTS INSTALLED (AN7-21) WERE DRILLED FOR COTTER PINS RATHER THAN THE BOLTS (AN7-21A) NOT DRILLED FOR A COTTER PIN THAT ARE CALLED OUT IN THE PARTS BOOK. THERE WERE NO LOG ENTRIES FOUND INDICATING THAT THE ENG HAD BEEN REMOVED SINCE INSTALLATION AT THE FACTORY.

2008FA0000900	CESSNA	PWA	ACTUATOR	BYPASSING
10/9/2008	560CESSNA	JT15D5	99121204	NOSE GEAR

HYD LOW LEVEL LIGHT CAME ON AFTER TAKEOFF AND REMAINED ON UNTIL FLAPS AND GEAR WERE SELECTED UP AND LOCKED. REPLACED NOSE GEAR ACTUATOR DUE TO INTERNALLY BYPASSING INTO THE EMERGENCY SIDE FOR GEAR EXTENSION. SENT NOSE GEAR ACTUATOR OUT FOR OVERHAUL AND INSTALLED AN OVERHAULED ACTUATOR. (K)

2008FA0000885	CESSNA		JAM-NUT	LOOSE
12/11/2008	560XL		66426438	STEERING BUNGEE

DURING ALL FLIGHT REGIMES (CLIMB/CRUISE/DESCENT) CREW FELT RESISTANCE WHEN LT RUDDER PEDAL WAS DEPRESSED. NO CHANGE IN FEEL WITH LANDING GEAR POSITION (UP OR DOWN). ON GROUND RESISTANCE COULD NOT BE FELT, HOWEVER ACFT WOULD PULL LT WHILE TAXIING. INITIAL FINDINGS REVEALED THE JAM NUT ON THE NOSE STEERING BUNGEE ASSY HAD BACKED OFF AND THE CLEVIS END OF THE BUNGEE HAD TURNED INTERNALLY CAUSING THE OVERALL LENGTH TO INCREASE. NOT KNOWING WHAT IF ANY INTERNAL DAMAGE WAS DONE TO THE SPRING, THE DECISION WAS MADE TO REPLACE THE NOSE STEERING BUNGEE WITH A NEW UNIT. THE BUNGEE WAS INSTALLED AND THE AND THE STEERING SYS WAS RIGGED IAW AMM. ACFT WAS RELEASED FOR TEST FLIGHT, NO RESISTANCE WAS FELT IN THE RUDDER, AND DURING GROUND OPERATIONS THE ACFT TRACKED TRUE AND STRAIGHT. ACFT WAS RETURNED TO SERVICE NO FURTHER OCCURRENCES. SUGGEST TO MFG TO ADD SOME TYPE OF SAFETYING DEICE TO THE JAMNUT ON THE BUNGEE CLEVIS.

2009FA0000000	CESSNA		BUNGEE CYLINDER	MALFUNCTIONED

12/8/2008	560XL		66429438	MLG

DURING TAXI, ACFT PULLS TO LT UNCOMMANDED. ALSO INFLIGHT CREW HEARD A RUBBING NOISE FROM THE LT RUDDER PEDAL. CREW ALSO MENTIONED IN FLIGHT THE RUDDER PEDALS FEEL LIKE THERE IS SOMETHING RUBBING. FOUND JAM NUT ON STEERING BUNGEE HAD LOOSENED, ALLOWING THE ROD END TO EXTEND ON THE PUSH ROD. REPLACED STEERING BUNGEE WITH NEW UNIT AND RE-RIGGED THE NOSE STEERING. IN THE MAINT PROCEDURE 32-50-00 THERE IS NO MENTION OF SECURING THIS ADJUSTMENT (ROD END BEARING, JAM NUT, PUSH ROD) SUCH AS LOCK TITE 732, OR POSSIBLY EVEN BETTER A WAY TO SAFETY THE JAM NUT. REPLACEMENT OF BUNGEE AND RIGGING THE NOSE STEERING FIXED THE PROBLEM. WORK WAS ACCOMPLISHED AT THE MFG SERVICE CENTER.

2008FA0000896	CESSNA		TUBE	MISMANUFACTURED
12/1/2008	750		671440211	ANTI-ICE SYSTEM

LT WING INBD HEATED LEADING EDGE AIR DISTRIBUTION TUBE PN 6714402-11 HAS AN INCOMPLETE WELD ON THE PERIPHERY OF THE FITTING. HAD ANIT-ICE TUBE PN 671440211 WELDED IAW DWG 6714402 DWG 001. REINSTALLED L/E AND SEALED SEAMS. (K)

CA081126005	CESSNA	ALLSN	ANTENNA	MALFUNCTIONED
11/4/2008	750	AE3007C	S67157520	NR 2 GPS

(CAN) FLIGHT CREW REPORTED NR 2 FMS DRIFTED 8NM AT END OF THE LEG. NR 2 GPS ANTENNA REPLACED AND TESTED SERVICEABLE IAW 34-54-01.

CA081126007	CESSNA	ALLSN	DISPLAY	FAILED
10/21/2008	750	AE3007C	7014300901	NR 4

(CAN) RE-OCCURRING DEFECT 2008/10/21 -FLIGHT CREW REPORTED NR 4 DISPLAY UNIT FLICKED ON START-UP. FAULT COULD NOT BE DUPLICATED AND WAS SWAPPED TO NR4 POSITION FOR TROUBLESHOOTING PURPOSES. 2008/10/22 -FLIGHT CREW REPORTED NR3 DISPLAY UNIT FAILED AT THE TOP OF DESCENT. NR 3 DISPLAY UNIT DEFERRED IAW MEL. 2008/10/24 -NR 3 DISPLAY UNIT REPLACED WITH REPAIRED UNIT FROM MFG AND CHECKED SERVICEABLE IAW AMM 34. 2008/10/30 -MX REPORTED NR 3 DISPLAY UNIT STARTING FLASHING INTERMITTENT WHITE DIAMONDS AND BLACK SCREEN DURING EXTENDED OPERATION. NR 3 DISPLAY UNIT DEFERRED IAW MEL. RE-OCCURRING DEFECT FORM GENERATED. TEAR DOWN REPORT OF THIS UNIT IDENTIFIED THIS AS BEING THE REASON FOR REMOVAL FROM PREVIOUS AIRCRAFT. 2008/11/04 -NR 3 DISPLAY UNIT REPLACED WITH REPAIRED UNIT FROM MFG AND CHECKED SERVICEABLE IAW AMM 34.

CA081201006	CESSNA	ALLSN	DOME NUT	CORRODED
12/1/2008	750	AE3007C	NAS1473A3K	WINDSHIELD POST

(CAN) DURING THE REPLACEMENT OF THE RT WINDSHIELD, DUE TO A BROKEN OUTER PANE, HEAVY CORROSION WAS NOTED COMING OUT OF THE DOME NUTS. THE WINDSHIELD IS INSTALLED FROM THE OUTSIDE AND THE SCREWS ARE HELD IN PLACE BY THESE DOME NUTS THAT RIVETED IN PLACE AROUND THE PERIMETER OF THE FRAME. EACH DOME NUT WAS BOROSCOPED AND FOUND THAT A MAJORITY WERE SPLIT OR CRUMBLED DUE TO CORROSION. ALL DOME NUTS WERE REPLACED AND THE WINDSHIELD RE-INSTALLED.

2008FA0000927	CESSNA	CONT	HOSE	CONTAMINATED
12/1/2008	A150K	O200*	S1053E16T	AIR INTAKE

BEGAN NORMAL LANDING CHECK LIST INCLUDING CHECKING CARB HEAT. AFTER PULLING CARB HEAT ON, ENGINE DIED. TURNED OFF CARB HEAT & ENGINE RESTARTED ON ITS OWN WITHOUT PILOT INPUTS. CONTINUED PATTERN & GRADUALLY REAPPLIED CARB HEAT ON BASE AND FINAL. ON SHORT FINAL ENGINE DIED & PILOT GLIDED TO A SAFE TOUCHDOWN. ABLE TO RESTART ENGINE & TAXI BACK TO PARKING WITHOUT INCIDENT. FOUND THE SCAT HOSE COMING FROM FRONT BAFFLE DOWN TO FRONT OF EXHAUST SHROUD HAD FILLED WITH WATER.

2009FA0000004	CESSNA	CONT	BOLT	FAILED
12/10/2008	T210L	TSIO520H		ENGINE

DURING CLIMB TO CRUISE ENGINE MADE A LOUD NOISE AND QUIT RUNNING, ENGINE REMAINED WINDMILLING TO LANDING. VISUAL INSP REVEALED NR 3 CYLINDER ROD BOLT MISSING, ROD CAP EXITED ENG THRU UPPER CASE,

NO EVIDENCE OF OIL STARVATION.

2009FA0000005	CESSNA	CONT	HOSE	BURST
12/23/2008	T210M	TSIO520*	S217840095A	HYD SYSTEM

RT NLG DOOR ACTUATOR HOSE FAILED CAUSING COMPLETE HYD FLUID LOSS . RESULTING IN LT MAIN GEAR NOT ABLE TO BE FULLY EXTENDED TO DOWN AND LOCKED POSITION. ACFT MADE EMERGENCY LANDING WITH LT MAIN GEAR PARTIALLY EXTENDED. MINOR DAMAGE. FAILED HOSE APPEARS TO BE ORIGINAL INSTALLED NEW IN 1977.

2008FA0000894	CESSNA	CONT	PUMP	SHEARED
12/15/2008	T210N	TSIO520*	6467683A1	ENGINE

ON SECOND TEST FLIGHT AFTER FACTORY REBUILT ENG INSTALLATION, ENG QUIT DURING TAKEOFF, JUST AFTER LIFTOFF, ALTITUDE LESS THAN 5 FT AGL. PILOT LANDED ACFT AND ROLLED OUT WITHOUT FURTHER INCIDENT. DURING THIS EVENT, PILOT REPORTED THAT AT TAKEOFF INITIATION, POWER SETTINGS WERE " NORMAL, SMOOTH, AND HEALTHY." AT ACFT ROTATION (65-70 KNOTS), PILOT REPORTED MANIFOLD PRESSURE AND FUEL FLOW DECREASED STEADILY AS ENGINE FALTERED, THEN QUIT COMPLETELY. TOWED ACFT TO MAINT AREA. ENG PROMPTLY RESTARTED BUT QUICKLY FALTERED. WITH PROMPT USE OF AUXILIARY FUEL PUMP ENGINE WAS ABLE TO KEEP RUNNING. INSPECTED ENG AND FOUND ENG DRIVEN FUEL PUMP DRIVE SHAFT SHEARED. CURRENTLY IN CONTACT WITH MFG ABOUT THE INCIDENT.

2009FA0000031	CESSNA	CONT	SPARK PLUG	CRACKED
1/21/2009	TU206F	TSIO520M	URHB32E	ENGINE

SPARK PLUG INSULATORS CRACKED AND FALLING APART. MULTIPLE PLUGS SHOW SIGNS OF SHORTING IN THE LEAD INSULATOR WELLS, FAILED SPARK PLUG PRESSURE CHECKS. SPARK PLUGS WERE REPLACED 12 MONTHS AGO AND HAVE TOTAL HOURS 380.

2008FA0000880	CIRRUS	CONT	SENSOR	DEFECTIVE
11/22/2008	SR20	IO360*	12635002	OIL SYSTEM

SENSOR PRODUCED A FALSE HIGH OIL PRESSURE INDICATION DURING ACFT APPROACH TO AIRPORT. PROBABLE CAUSE WAS INTERNAL FAILURE, RECOMMENDATIONS TO PREVENT RECURRENCE ARE UNAVAILABLE, AS THE FREQUENCY OF THIS TYPE OF OCCURRENCE HAS BEEN VERY LOW.

2009FA0000027	CIRRUS		WIRE HARNESS	CHAFED
12/19/2008	SR22		14251001	ENG COMPARTMENT

FOUND THE BLACK PLASTIC WIRE LOOM THAT HOUSES THE MAP WIRING HARNESS FWD OF THE BAFFLE TO HAVE CHAFED THROUGH THE WIRE INSULATION OF THE WIRES IN SEVERAL LOCATIONS. THIS IS CAUSED BY THE WIRE HARNESS BEING ABLE TO MOVE INSIDE THE LOOM AND THE LOOM BEING MADE FROM A HARDER MATERIAL THAN THE WIRE INSULATION. INSTALL NEW WIRE HARNESS AND REMOVE THE PLASTIC LOOM. SECURE WIRES AS NEEDED. (K)

CA081204001	CNDAIR	GE	PIPE	CHAFED
12/2/2008	CL600*	CF348C5	CN6273003001	FUEL FLOW

(CAN) MX FOUND NR1 ENGINE MOTIVE FLOW PIPE CHAFED LEAKING FUEL. PIPE WAS REPLACED, ENGINE RUNS AND LEAK CHECKS COMPLETED SATISFACTORY. CAUSE OF CHAFING COULD NOT BE CONFIRMED. IT WAS REPORTED THAT THE NEAREST DRAIN LINE WAS AT LEAST .5 INCH AWAY AND ALL SEEMED PROPERLY SECURED.

CA081128005	CNDAIR	GE	FDAS	ODOR
11/27/2008	CL6002B19	CF343A1	285T08551	COCKPIT

(CAN) ON CRUISE THE F/A REPORTED A STRONG ODOR IN THE CABIN, PILOT CONFIRMED THE STRONG SMELL AND DIVERTED FLIGHT TO BASE AND DECLARE AN EMERGENCY LANDING. AFTER MX INVESTIGATION, FOUND THE FDAS "FLIGHT DECK ACCESS SYS" AT FAULT. ELECTRICAL ODOR COMING FROM THIS COMPONENT.

CA081029004	CNDAIR	GE	CONTROL UNIT	UNSERVICEABLE

10/26/2008	CL6002B19	CF343B1	8004301	TE FLAPS

(CAN) ON DECENT CREW SELECTED FLAPS DOWN AND FLAPS STOPPED AT 3 DEGREES. CREW ELECTED TO DO A GO AROUND AND PERFORMED THEIR CHECKLIST. ADVISED TOWER THEY WOULD LIKE TRUCKS ON STANDBY BUT DID NOT DECLARE AN EMERGENCY. CREW BRIEFED F/A AND MADE ANNOUNCEMENT TO PASSENGERS THEY WOULD BE LANDING A LITTLE FASTER THAN USUAL. FLIGHT LANDED WITHOUT INCIDENT. RESET OF FLAP SYS AND MEL 27-02 APPLIED. NEXT FLIGHT HAD FLAP SNAG INTO. ACFT THEN FLOWN WHERE THE FLAP SKEW DETECT CONTROL UNIT REPLACED AND SYS CHECKED SERVICABLE.

CA081129001	CNDAIR	GE	WINDOW	FAILED
11/25/2008	CL6002B19	CF343B1	NP1393229	COCKPIT

(CAN) IN FLIGHT LT SIDE WINDOW SHATTERED. FLIGHT DIVERTED MX REPLACED SIDE WINDOW.

CA081129003	CNDAIR	GE	WARNING LIGHT	ILLUMINATED
11/22/2008	CL6002B19	CF343B1		MLG

(CAN) AFTER TAKEOFF, LANDING GEAR DID NOT RETRACT WHEN SELECTED UP. LANDING GEAR LIGHT REMAINED GREEN. FLT CREW ALSO REPORTED INBD ANTI-SKID (C) AND PARK BRAKE SOV (C) MSG. ALL MSGS CLEARED WHEN GEAR SELECTED DOWN. ACFT RETURNED TO DEPARTURE AIRPORT AND LANDED WITHOUT FURTHER INCIDENT.

CA081129005	CNDAIR	GE	ACM	SEIZED
11/16/2008	CL6002C10	CF348C5B1	GG670950093	LEFT

(CAN) AFTER LANDING AND TAXI TO GATE, FLT CREW REPORTED SMOKE STARTED COMING FROM VENTS IN COCKPIT. CREW ELECTED TO STOP SHORT OF THE GATE AND EVACUATE THE ACFT. ACFT WAS EVACUATED WITHOUT INCIDENT. MX INSPECTED ACFT AND FOUND THAT THE LT ACM HAD SEIZED. NO OTHER DEFECTS WERE NOTED. LT PACK WAS DEFERRED IAW THE MEL AND ACFT RETURNED TO SERVICE. 17 NOV 08: MX REMOVED AND REPLACED THE LT ACM AND OPS CHECKED. NO FURTHER DEFECTS NOTED. LT PACK REMOVED FROM DEFERRAL AND ACFT RETURNED TO SERVICE.

CA081029001	CNDAIR		TUBE	DAMAGED
10/27/2008	CL604			FUEL SYS

(CAN) WHILE TROUBLESHOOTING A FUEL TRANSFER PROBLEM ON THE CHALLENGER 604, SERIAL NR 5320, WE FOUND 3 DAMAGED FUEL TUBES IN THE CENTER FUEL TANKS, 2 IN THE RT SIDE AND 1 IN THE LT SIDE. ALL 3 FUEL TUBES WERE REPLACED.

CA081203012	CVAC		VALVE	FAILED
11/26/2008	580		6506196	PROP PITCH LOCK

(CAN) IN FLIGHT, CREW EXPERIENCED A FAILURE OF THE NR 2 ENG PITCH LOCK VALVE. ENGINE WAS E-HANDLED AND AC LANDED WITHOUT INCIDENT. MAINT REPLACED THE NR 2 PITCH LOCK VALVE AND ACFT RETURNED TO SERVICE.

CA081028007	DHAV	PWA	BRACKET	CRACKED
10/20/2008	DHC2MKI	R985AN14B	C2CE329A	FIREWALL

(CAN) DURING A 100 HOUR INSP, AN AME FOUND A CRACK IN RADIUS OF MIXTURE CONTROL BRACKET ATTACHED TO FIREWALL, BRACKET WAS REMOVED, REPAIRED AND REINSTALLED.

CA081125014	DHAV	PWA	PUMP	DAMAGED
10/11/2008	DHC6100	PT6A34	RR12830	FUEL BOOST

(CAN) OVERHAULED FUEL BOOST PUMP MAKING GRINDING NOSE WHEN TURNED ON. PUMP REMOVED AND REPLACED WITH OVERHAULED BOOST PUMP. FAILED PUMP HAD ONLY 6.1 HOURS TIME IN SERVICE SINCE OVERHAUL AND 5 FLIGHT CYCLES. FAILED PUMP RETURNED TO INSTALLER.

CA081203009	DHAV	PWA	EEC	MALFUNCTIONED
11/25/2008	DHC8*	PW120A	7898422009L6	ENGINE

(CAN) PILOT REPORTED SHUTTING ENGINE DOWN IN FLIGHT DUE TO EXCESSIVE TORQUE FLUCTUATIONS. EEC WAS REPLACED AND DEFECT RECTIFIED. THE SUSPECT EEC HAS BEEN SENT FOR INVESTIGATION. MFG WILL CONTINUE INVESTIGATING THE EVENT AND ADVISE OF ROOT CAUSE ONCE ESTABLISHED.

CA081128001	DHAV	PWA	TURBINE	FAILED
11/25/2008	DHC8101	PW120A	PW120A	NR 2 ENGINE

(CAN) PRIOR TO TAKEOFF, THE CREW FELT A THUD AND GRINDING NOISE FROM THE NR 2 ENGINE AT 70 PERCENT TORQUE. THE ENGINE WAS IMMEDIATELY SHUTDOWN, BUT BY THE TIME THE TORQUE REDUCED TO ZERO PSI AND THE ITT OF THE ENG REACHED UP TO 1200 DEGREE CELSIUS. ENG WAS IMMEDIATELY SHUTDOWN AND TAKEOFF WAS ABANDONED. ON RETURN AT THE RAMP, BROKEN PIECES OF BLADES OF PWR TURBINE WERE FOUND IN THE TAIL EXHAUST PIPE. ALL PARAMETERS OF BOTH ENGINES WERE WITHIN LIMIT. AS SOON AS THE TAKEOFF ROLL INITIATED AND PWR WAS ADVANCED THROUGH 70 PERCENT TORQUE, A THUD AND GRINDING NOISE WAS HEARD FROM RT SIDE (NR 2 ENG) AND ACFT STARTED SWINGING TO THE RT. IMMEDIATELY, THE TAKEOFF WAS REJECTED AND WHILE LOWERING THE POWER LEVERS THE TORQUE DROPPED TO ZERO (0 PERCENT) AND AT THE SAME TIME ITT OF THE AFFECTED (NR 2 ENG) STARTED RISING VERY SHARPLY UP TO 1200 DEGREE C. MEMORY ITEMS OF THE ENGINE SHUTDOWN WERE CARRIED OUT. THE CONDITION LEVER WAS IMMEDIATELY PUT TO "FUEL OFF" AND THE RT T-HANDLE WAS PULLED. ITT STARTED DROPPING WITH NO FIRE INDICATION. CHECK IAW THE QUICK REFERENCE HANDBOOK (QRH) WAS COMPLETED IAW CHECK LIST. ONCE EVERYTHING CAME UNDER CONTROL, THE ACFT WAS TAXIED BACK TO BASE.

CA081203002	DHAV	PWA	ENGINE	MALFUNCTIONED
11/25/2008	DHC8102	PW120A		RIGHT

(CAN) ON TAKEOFF ROLL WITH PASSENGERS ON BOARD POWER WAS ADVANCED THROUGH 70 PERCENT TORQUE. A THUD AND GRINDING NOISE WAS HEARD FROM THE RT SIDE. TAKEOFF WAS ABORTED AND AC RETURNED TO THE GATE. ENG TO BE REMOVED AND SENT FOR INVESTIGATION. MFG WILL CONTINUE INVESTIGATING THE EVENT AND ADVISE OF ROOT CAUSE ONCE ESTABLISHED.

CA081126006	DHAV	PWA	LINE	CRACKED
10/10/2008	DHC8103	PW121	82920010263	HYDRAULIC SYS

(CAN) DURING CRUISE FLIGHT SEVERAL DROPS OF HYD FLUID WERE DISCOVERED COMING FROM THE RT OVERHEAD CEILING. SOME FLUID FELL ON THE PASSENGERS IN THE AREA. NO INJURIES REPORTED. NO EMERGENCY ACTION/PROCEDURES CONDUCTED. AFTER AN UNEVENTFUL LANDING MX DETERMINED THE LEAK TO BE FROM A HYD TUBE FITTING. THE TUBE WAS REPAIRED AND THE ACFT RETURNED TO SERVICE.

CA081204002	DHAV	PWA	WIRE	DAMAGED
11/8/2008	DHC8201	PW120A		ALTERNATOR

(CAN) NR1 AND NR2 AC GEN ANNUNCIATIONS ILLUMINATED DURING TAXI. UPON FURTHER INVESTIGATION IT WAS FOUND THAT THE FOLLOWING DISCREPANCY HAD OCCURED. FOUND WIRE 2421-10002FILB-1 AND WIRE 2421-2000IGI2A-1 WORN THROUGH AND SHORTED AT STA YH59:00 ON LT WING REAR SPAR.

CA081204006	DHAV	PWA	WIRE	SHORTED
12/3/2008	DHC8301	PW123		CABIN LIGHT

(CAN) SPARKS/SMOKE FROM SIDEWALL LIGHT 1C, BALLAST CONFIRMED THE SOURCE. CREW DROPPED PSU PANEL TO FUND THE SOURCE AND CONFIRM SHORTING OF THE FORE/AFT WIRES TO THE AFT JUNCTION BOX. WIRING REPAIRED.

CA081203011	DHAV	PWA	BRACKET	CRACKED
12/2/2008	DHC8301	PW123	85711569001	AILERON CONTROL

(CAN) LT AILERON INPUT BRACKET FOUND CRACKED. LT AILERON QUADRANT BRACKET REMOVED P/N 85711569-001. POST S/B 8-57-27 QUADRANT BRACKET TO BE INSTALLED. NEW BRACKET IS IN SHEET METAL SHOP. REMOVED AND REPLACED NEW LT AILERON QUADRANT BRACKET IAW SB 8-57-27. LT WING AILERON TERMINAL QUADRANT, PREVIOUSLY REMOVED FOR SHEET METAL ACCESS, INSTALLATION COMPLETED AS IAW AMM 27-12-31 TOTHE END OF STEP 12. INDEPENDENT INSP CARRIED OUT ON DEFECT 814228. M7109 FUNCTION TEST 1.C. COMPLETED FOR THOSE PORTIONS OF THE SYS THAT HAVE BEEN DISTURBED AND FOUND TO WORK NORMALLY M7128.

CA081029003	DHAV	PWA	SIGNAL COND UNIT	INOPERATIVE
10/24/2008	DHC8301	PW123	30005000024	PROPELLER

(CAN) JUST AFTER TAKEOFF, NR 2 ENGINE WENT TO FEATHER. AUTO FEATHER WAS ARMED/CREW HAD NOT COMMANDED AN ENG FEATHER. CREW COMPLETED SHUT DOWN OF NR2 ENG, DECLARED AN EMERGENCY AND RETURNED TO ORIGINATING AIRPORT. NO OTHER INCIDENTS DURING LANDING. MAINT INTERROGATION OF FDR RECORD SHOWS ELECTRONIC FEATHER SIGNAL WAS GENERATED BY THE TSCU AND SYSTEMS RESPONDED TO THIS SIGNAL AND COMMENCED FEATHERING OF THE NR 2 ENGINE. ENG MFG EXAMINATION OF FDR DATA SHOWS ENGINE AND PROP OVER TORQUE DURING ENGINE FEATHER. DILASTIC TEST OF ENG HARNESS AND TSCU SHOWED NO CONFIRMED FAULTS. ENG HARNESS AND TSCU (TSCU SUSPECTED) REPLACED FOR TROUBLESHOOTING. ENGINE OVER TORQUE INSPECTIONS COMPLETED AND ALLOWED TO CONTINUE IN SERVICE. PROP REPLACED DUE TO OVER TORQUE CONDITION.

2008FA0000881	DIAMON	CONT	MAGNETO	FAILED
12/9/2008	DA20C1	IO240B	4310	LEFT

MAGNETO, PN 4310, SN 08063188. DELIVERED NEW WITH APPLICABLE SB, SB3-08A. AFTER 21.6 HOURS COMPLIANCE WITH SB3-08A FOUND PART FAILED.

CMRR200901001	DORNER		BOLT	WRONG PART
1/15/2009	DO328300		D23	WING TO BODY

WING/FUSELAGE REAR SPAR CONNECTION HAS IMPROPER BOLTS INSTALLED FROM THE MFG. NOTICED FUEL LEAK FROM AROUND BOLTS AND CONFIRMED FROM THE MFG THAT IMPROPER BOLTS WHERE INSTALLED IAW THE DESIGN DRAWINGS. THE BOLTS INSTALLED WHERE A D23 AND SHOULD HAVE BEEN A D21. AS A RESULT OF THE 3.2MM LONGER BOLTS, THEY WHERE UNABLE TO BE TORQUED DOWN PROPERLY ALLOWING MOVEMENT OF THE BOLTS, BELIEVE THIS TO BE THE CAUSE OF THE FUEL LEAKING AROUND THE BOLTS.

CA081201008	DOUG	ALLSN	CHIP DETECTOR	CRACKED
9/19/2008	600N	250C47M	B7936S	TRANSMISSION

(CAN) BOTH TEDESCO B7936S CHIP DETECTOR BASES FOUND CRACKED AT BASE OF O-RING FLANGE. CAUSED BY OVERTORQUE DURING AN EARLIER INSTALLATION. CRACKS NOT VISIBLE UNTIL CHIP DETECTORS WERE REMOVED TO DRAIN TRANSMISSION OIL.

CA081201009	DOUG	ALLSN	ANGLE	CRACKED
11/28/2008	600N	250C47M	500N34247	TAILBOOM

(CAN) FUSELAGE ANGLE FOUND CRACKED DURING A TAILBOOM INSPECTION. PART IS NOT READILY VISIBLE OR A PLACE OF INTEREST DURING INSPECTIONS AND MAY HAVE GONE SOME TIME AS CRACKED. PART IS TO BE REPLACED BEFORE FURTHER FLIGHT.

2008FA0000893	DOUG	PWA	PUMP	LEAKING
12/17/2008	C47	R183092	2PR600CWT	LT ENGINE FUEL

LT ENG FUEL PUMP DEVELOPED LEAK THROUGH THE BLEED HOLE IN A PLUG INSTALLED ON THE PRESSURE ADJUSTMENT PORTION OF THE PUMP. SYS WAS PRESSURIZED BY THE ELECTRIC FUEL PRESSURE BOOST PUMP AND A LEAK WAS DETERMINED TO BE APPROX (1) DROP PER SECOND AT A PRESSURE OF 18 PSI.

2009FA0000002	ECLIPS		ACTUATOR	FAULTY
12/18/2008	ECLIPSEEA500		EM411514	RT MLG

DURING CLIMB THE RT MLG FAILED TO FULLY RETRACT. GEAR INTRANSIT INDICATED. ON SELECTION OF LANDING GEAR DOWN, RT MLG FAILED TO EXTEND. ALTERNATE GEAR EXTENSION USED AND GEAR EXTENDED FULLY AND "DOWN AND LOCKED" INDICATED. NORMAL LANDING ACCOMPLISHED. ON JACKS THE RT MLG WOULD ONLY RETRACT ABOUT 45 DEGREES AND WOULD NOT EXTEND FULLY WHEN SELECTED. RT MLG ACTUATOR REPLACED AND SYSTEM FUNCTION TESTED NORMAL.

CA081203007	EMB	PWA	ENGINE	MAKING METAL
11/26/2008	EMB120	PW118		

(CAN) DURING CLIMB AT FL60, THE CREW NOTICED A LOW ENGINE OIL PRESSURE LIGHT, FOLLOWED BY A POPPING NOISE. THE ENG WAS SHUTDOWN AND THE ACFT WAS DIVERTED BACK TO BASE. GROUND INSP FOUND THE TURBOMACHINE CHIP DETECTOR COVERED WITH METAL SHAVINGS AND THE LP AND HP ROTORS INCAPABLE OF ROTATION. THE ENG HAD RECENTLY UNDERGONE A HOT SECTION INSP. MFG WILL CONTINUE INVESTIGATING THE EVENT AND ADVISE OF ROOT CAUSE ONCE ESTABLISHED.

CA081201001	EMB	GE	SEAT BACK	LOOSE
11/28/2008	ERJ190100IGW	CF3410E5A1	412310416	COCKPIT

(CAN) THE ATTACH SCREWS HOLDING SEAT BACK BRACKET TO SEAT ARM ARE LOOSE, THE BRACKET ATTACHES THE SEAT BACK TO THE ARM. THE SCREWS ARE 0.5 INCHES IN LENGTH, THE SWIVEL BRACKET ATTACH POINT WAS ALSO LOOSE. REF: 4/MM 41402003, IPL 25-22-90 PAGE 10044 FIGURE 7 ITEMS 5 & 10. CHAIR PN ARE414140003-105, 41414003-111,41414003-113,41404003-103 & 41404003-105.

CA081203008	FOKKER	PWA	GASKET	TORN
11/28/2008	F27MK50	PW125B		OVRSPD GOVERNOR

(CAN) AT TOP OF CLIMB, OIL PRESSURE FLUCTUATION WAS REPORTED FOLLOWED BY LOW OIL PRESSURE INDICATION. THE ENGINE WAS SHUTDOWN BY THE PILOT. ON RETURN TO GATE, THE ENG COWL WAS FOUND COVERED WITH OIL. OVERSPEED GOVERNOR GASKET FOUND DETERIORATED. GASKET WAS REPLACED.

2008FA0000882	GULSTM	BELLCRANK	MISREPAIRED
12/9/2008	112A	473501	ZONE 500

EXCESSIVE AILERONS T/E FREE PLAY. SUSPECTED AIL SYS CUMULATIVE WEAR. UPON FURTHER CLOSE VISUAL INSP, FOUND AILERONS BELLCRANK ASSY, PIVOT BRG HSG SECURED TO BELLCRANK PLATE WITH (3 EACH) BLIND FASTENERS. PROTRUDING HEAD FASTENERS WERE FOUND LOOSE AND EXHIBITING BLACK POWDERY RESIDUE AT FASTENER'S PROTRUDING HEAD PERIMETER, SUGGESTING BRINELLING IS OCCURRING ABOUT UPSET FASTENER HOLLOW SHANK OD AND BELLCRANK PLATE FASTENER HOLE SURFACE. ALL SUBJECT FASTENER'S DRIVE STEEL PINS WERE FOUND NOT TO HAVE LIBERATED FROM FASTENER HOLLOW SHANK ID. REPLACED PIVOT BEARING HOUSING ASSY P/N MS20218-1 DUE WORN AND REINSTALLED/SECURED SAME WITH SOLID AD RIVETS. COMMANDER IPC PAGE 2-195 ITEMS 25, 27 BELLCRANK ASSY PIVOT BEARING PLATE AND ITS ASSOCIATED FASTENERS ARE MOSTLY LOADED IN SHEAR.

2009FA0000008	GULSTM	MOUNT	CORRODED
1/15/2009	GIV	1159P4123001	ZONE 400

DURING SCHEDULED INSP, ENGINE MOUNT CORROSION WAS DISCOVERED.

2009FA0000021	GULSTM	BEARING	LOOSE
10/22/2008	GIV	SE0521903XXX	NLG

WHILE TAXIING ACFT, CREW REPORTED POPPING SOUND COMING FROM NOSE WHEEL WELL AND DURING RT TURNS. FOUND NLG DRAG BRACE UPPER ATTACH VERTICAL BEARING AT FS 119, FINGER TIGHT. INSPECTED OTHER ACFT AND FOUND SAME OCCURRENCE. SB 157 HAS BEEN COMPLIED WITH ON 3/09/2004.

2008FA0000902	HUGHES	ALLSN	TUBE	UNSERVICEABLE
12/8/2008	369D	250C20B	369H8407	BLEED AIR

THIS DEFECT WAS DETECTED DURING TROUBLESHOOTING FOR AN ENGINE PWR PROBLEM. THIS FLEX TYPE TUBE ASSY WAS INSTALLED IN CONJUCTION WITH AN STC FROM ENG PWR PROBLEM. THIS FLEX TYPE TUBE ASSY WAS INSTALLED IN CONJUNCTION WITH AN STC, PC SAFETY VALVE KIT SE5511NM. AFTER THE DEFECT WAS DETECTED, THE KIT FOR SAFETY VALVES WAS REMOVED AND THE ORIGINAL HARD LINE WAS RE-INSTALLED. THE STC KIT WILL NOT FIT IN THE ENGINE COMPARTMENT WITHOUT THE USE OF THE FLEX BLEED AIR TUBE. THESE TUBE ASSY ARE VERY SENSITIVE TO BREAKAGE AFTER THEY HAVE TAKEN A SET. (K)

2009FA0000022	HUGHES	ALLSN	NUT	BACKED OUT
10/27/2008	369FF	250C30	MS210435	COOLER BLOWER

OIL COOLER BLOWER DRIVEN PULLEY RETAINING NUT IS BACKING OFF OF SHAFT DURING NORMAL USE. NUT IS A STAINLESS STEEL, SILVER PLATED, ALL METAL SELF LOCKING TYPE NUT. THIS WAS THE 3RD OCCURRENCE OF

THIS TYPE FOR OUR UNIT AND WE ARE ALSO AWARE OF ONE OTHER INCIDENT TO ANOTHER COMPANY. WHEN THE NUT BACKS OFF IT CAUSES THE SHAFT BEARING TO GO BAD WHICH DESTROYS THE OIL COOLER BELT. THIS LEADS TO EXTREME ENGINE OIL AND MAIN TRANSMISSION OIL TEMPERATURES. AFTER INVESTIGATING PN, WE FOUND THAT MFG HAS BEEN USING THIS TYPE NUT FOR A LONG TIMEAND WERE UNSURE IF THE NUT CURRENTLY BEING PRODUCED ARE SUBSTANDARD. UNIT WAS O/H. THE O/H FACILITY HAS BEEN INFORMED OF THESE INCIDENTS AND THEY ARE CURRENTLY INVESTIGATING THE MATTER. (K)

2008FA0000898	LEAR	GARRTT	FRAME	CORRODED
12/22/2008	35A	TFE731*		FUSELAGE

WHILE INSPECTING THE LT AFT FUEL TANK STRUCTURE, DUE TO LIGHTENING DAMAGE EVENT, FOUND THE FOAM INSULATION WATER SOAKED, AND CAUSING SERIOUS CORROSION IN OUTER FLANGE OF AFT PRESSURE BULKHEAD AND SURROUNDING STRUCTURE. THE HOLE IN THE LT OUTER PRESSURE BULKHEAD FLANGE, WHERE HOT AIR PIPE PENETRATES FLANGE HAD SEVERE INTERGRANULAR CORROSION OCCURRING , AND AREA WAS VERY WET.

2009FA0000030	LEAR		CIRCUIT BREAKER	MALFUNCTIONED
12/28/2008	55LEAR			MAIN BUSS

ACFT DEPARTED, ENROUTE WITH 2 PASSENGERS, 2 HOURS INTO FLIGHT, JUST PRIOR TO INITIAL DESCENT, ACFT EXPERIENCED A COMPLETE ELECTRICAL FAILURE AND LOSS OF PRESSURIZATION AT FL430. FLIGHT CREW REGAINED CONTROL OF PRESSURIZATION AROUND FL330 AND RESTORED PWR TO NR 1 COMM RADIO. ACFT DIVERTED AND MADE A VISUAL NO-FLAP APPROACH & LANDING. ACFT OVERRAN RUNWAY APPROX 50 FT INTO MUD. NO PASSENGERS OR CREW WERE INJURED AND ACFT HAD MINOR DAMAGE. AFTER INITAL INSP, SUSPECT LT MAIN BUSS C/B ISSUE BUT UNABLE TO CONFIRM THIS TO BE THE PROBLEM AT THIS TIME. ADDITIONAL INSP AND MAINT NEEDED TO CONFIRM C/B OVERLOAD. (K)

CA081125016	LEAR	PWA	ENGINE	SHUTDOWN
11/17/2008	60LEAR	PW305A		

(CAN) DURING CRUISE AT FL190, THE ENGINE SPOOLED DOWN UNCOMMANDED. EMERGENCY WAS DECLARED AND THE FLIGHT DIVERTED AND A SINGLE ENGINE LANDING WAS ACCOMPLISHED. MFG WILL CONTINUE INVESTIGATING THE EVENT AND ADVISE OF ROOT CAUSE ONCE ESTABLISHED.

CA081125019	LEAR	PWA	OIL SYSTEM	LEAKING
11/19/2008	60LEAR	PW305A		RT ENGINE

(CAN) APPROX 20 MILES SOUTH OF AIRPORT, THE PILOT REPORTED SMOKE IN CABIN. HE DECLARED AN EMERGENCY AND THEY WERE GIVEN PRIORITY TO LAND. MX PERFORMED GROUND RUNS AND FOUND THE RT ENG OIL LEAKING INTO THE BYPASS AIR AND REACHING CABIN BLEED AIR DUCTS. THE ENG IS BEING REMOVED.

2008FA0000879	MOONEY		LEG ASSY	BROKEN
11/27/2008	M20F		540004501	NLG

PILOT STATED THAT HE HEARD A LOUD NOISE DURING TAKE-OFF AND THAT THE AIRCRAFT BEGAN TO "HANDLE DIFFERENTLY." HE CONTINUED TO ACCELERATE BRIEFLY, LIFTED OFF AND THEN DECIDED TO ABORT THE TAKEOFF. THE ACFT CAME TO REST ON ITS NOSE WITH THE NOSE L/G FOLDED BACK BENEATH THE ACFT. INSP OF THE NOSE GEAR REVEALED THAT THE NLG LEG TUBING HAD BROKEN AT THE WELD POINTS ON THE UPPER ENDS OF THE TUBING. CLOSER INVESTIGATION SHOWED POSSIBLE FATIGUE CRACKS AT THE FWD PORTION OF THE WELDED JOINTS.

2008FA0000918	MOONEY	LYC	MAGNETO	MALFUNCTIONED
12/15/2008	M20J	IO360A3B6D	103827991	ENGINE

STARTED THE ACFT NORMALLY, TAXIED FROM HANGAR TO THE SELF-SERVE FUEL PUMP AND SHUTDOWN. FUELED ACFT. ATTEMPTED TO START THE ACFT AFTER FUELING. THE ENG TURNED OVER NORMALLY, BUT DID NOT FIRE. TROUBLESHOOTING REVEALED NO SPARK OUTPUT FROM THE MAGNETO. SENT MAGNETO OUT FOR REPAIR MAGNETO SHOP DETERMINED THE MAGNET HAD SLIPPED ON THE SHAFT. A NEW MAGNETO WAS INSTALLED IN THE ACFT. ENGINE TT: 5345.1; TSO 132.6. THIS MAGNETO WAS INSTALLED AT THE ENGINE OVERHAUL AS AN OVERHAULED EXCHANGE UNIT. PROBABLE CAUSE/ RECOMMENDATIONS TO PREVENT RECURRENCE; NO ADDITIONAL INSP REQUIREMENTS ARE RECOMMENDED. A FAILURE SO SOON AFTER

OVERHAUL SUGGESTS A DEFECT IN THE PARTS OR A FAILURE IN THE OVERHAUL PROCESS. THE LARGEST CONCERN IS THAT THIS TYPE OF FAILURE IN A DUAL MAGNETO INSTALLATION STOPS THE ENG. (K)

2008FA0000908	PIPER	CONT	CONNECTING ROD	FAILED
8/10/2008	J3C65	C908F	510384	ENGINE

NR 1 CONNECTING ROD FAILED IN FLT, OFF-AIRPORT LANDING AND SUBSTANTIAL DAMAGE. CONNECTING ROD FAILED SLIGHTLY ABOVE CRANKSHAFT; ROD CAP STILL BOLTED & SAFETIED TO DAMAGED & SEPARATED LOWER PORTION OF CONNECTING ROD. DAMAGE TO CRANKCASE, CRANKSHAFT, & ADDITIONAL INTERNAL ENGINE COMPONENTS SUGGEST A FAILED/ SPUN NR 1 ROD BEARING, RESULTING IN A LOSS OF LUBRICATION TO NR 1 CONNECTING ROD. EXCESSIVE HEAT BUILDUP, AND SUBSEQUENT SEIZURE TO THE CRANKSHAFT JOURNAL AND ROD FAILURE. THE OIL SCREEN MINIMAL CONTAMINATION, INDICATING A SHORT OPERATING TIME BETWEEN PART FAILURE AND ENGINE SHUTDOWN. ENG EXHAUST WAS CLEAN AND THERE WAS NO EVIDENCE OF EXTERNAL OIL LEAKAGE ON THE ENG; REGARDLESS, OIL QUANTITY IN THE ACFT SUMP WAS BELOW (2) QTS. THE LOW OIL QUANTITY, COUPLED WITH THE POWER REQUIRED FOR FLOAT - PLANE OPERATIONS, CONTRIBUTED TO COMPONENT OVERHEAT AND FAILURE.

2009FA0000006	PIPER	LYC	TUBE	DAMAGED
1/9/2009	PA28181	O360*	0975000	TIRE

UPON REMOVAL OF TUBE FROM TIRE. TUBE WAS FOUND TO HAVE A HOLES FROM AN UNKNOWN ORIGIN CAUSING AIR DEFLATION OF TIRE.

2009FA0000028	PIPER	LYC	CRANKCASE	CRACKED
12/5/2008	PA28181	O360A4M	11B200611SH	ENGINE

FOUND LT FRONT CRANKCASE CRACKED DURING ROUTINE MX. (K)

2009FA0000029	PIPER	LYC	CRANKCASE	CRACKED
12/6/2008	PA28181	O360A4M	11B200615H1	ENGINE

FOUND LT FRONT CRANKCASE CRACKED DURING ROUTINE MX. (K)

CA081029002	PIPER	LYC	PROBE	MALFUNCTIONED
10/27/2008	PA31	TIO540A2C	1020007	CYLINDER HEAD

(CAN) PILOT OBSERVED LT ENG CYLINDER HEAD TEMP OVER RED-LINE. OTHER ENG PERIMETERS WERE NORMAL. PILOT CHOSE TO SHUTDOWN THE ENG AND FEATHER THE PROPELLER. LANDED WITHOUT INCIDENT. MAINT TROUBLESHOT AND FOUND LT ENGINE CHT READ 150 DEGREES WHEN ENGINE WAS COLD. CHANGED THE PROBE TO P/N AN5546-1 IAW IPC. THE PROBE REMOVED IS AN FAA/PMA ALTERNATE TO THE REQUIRED P/N IN THE IPC.

CA081128006	PIPER	LYC	VALVE SEAT	WORN
11/26/2008	PA31	TIO540A2C		ENGINE

(CAN) INTAKE VALVE STAYING OPEN, INTAKE VALVE AND SEAT WORN.

2008FA0000886	PIPER	LYC	CYLINDER	SEPARATED
11/11/2008	PA31310	TIO540J2B		ENGINE

PILOT NOTED REDUCTION OF PWR, THEN VIBRATION IN CRUISE FLIGHT. VISUAL INSP REVEALED NR1 CYL INTAKE TUBE SEPARATED FROM SUMP INLET AND WEDGED APPROX 1 INCH AFT OF INLET. FUEL INJECTOR LINE BROKE AT INJECTOR. BOTTOM (2) CYL HOLD DOWN STUDS BROKE AND (1) BOTTOM, (1) TOP HOLD DOWN NUTS BACKED OFF. SUSPECT CYL HEAD SEPARATION.

2009FA0000011	PIPER	LYC	BOLT	BROKEN
1/14/2009	PA44180	O360A1H6	502341AN17522A	NLG DOWNLOCK

UPON GEAR EXTENSION CREW DID NOT RECEIVE A NOSE GEAR DOWN AND LOCKED INDICATION. NO NOSE GEAR WAS OBSERVED IN WITNESS MIRROR OR BY GROUND PERSONNEL DURING LOW PASS. ACFT LANDED WITH NOSE GEAR IN WHEEL WELL. UPON INSP BY MX IT WAS OBSERVED THAT THE NOSE LANDING GEAR DOWN LOCK PIVOT HAD DISLODGED AT PIVOT POINT AND JAMMED AGAINST THE DRAG LINK MOUNT RESTRICTING

MOVEMENT OF NOSE GEAR ACTUATOR. CAUSE OF DISLODGEMENT WAS A BROKEN PIVOT BOLT.

2009FA0000001	QUARTZ		ROD END	LACK OF LUBE
1/5/2009	11E			AILERONS

ACFT HAD AN ISSUE WITH THE AILERON CONTROL ON A FLT IN THE PATTERN. THE AILERON CONTROL BECAME VERY STIFF DURING FLT ALTHOUGH ALL APPEARED NORMAL ON THE PREFLIGHT AND RUNUP . INSPECTED ACFT, FOUND THAT IT WAS VERY STIFF. FOUND THE ISSUE TO BE THE LT AILERON PUSH ROD FWD ROD END AT THE BELLCRANK TO BE DRY DUE TO LACK OF LUBRICATION THIS HAPPENED AT ABOUT 50 HOURS TOTAL TIME.

2008FA0000901	RAYTHN		DAMPER	WRONG PART
12/2/2008	390		390814101007	BUMPER MISSING

INVESTIGATED PILOT REPORT OF MLG DOORS NOT CLOSING INDICATION FOLLOWING GEAR RETRACTION. FOUND RUBBER BUMPER MISSING FROM LT MAIN GEAR UPLOCK DAMPER ASSY, LT MAIN GEAR UPLOCK DAMPER ASSY CAUSING LT MN GEAR UPLOCK HOOK NOT TO RESET AND ENGAGE ROLLER FOLLOWING GEAR RETRACTION DUE TO EXCESSIVE UP-TRAVEL OF LT MAIN GEAR. REPLACED LT MAIN GEAR UPLOCK DAMPER WITH SERVICEABLE, SUPERSEDING PN 3908141010013 DAMPER ASSY. LANDING GEAR RETRACTION/ EXTENSION OPERATIONS NORMAL.

2008FA0000895	ROBSIN	LYC	ROBSIN	BELT	DEFECTIVE
12/12/2008	R22BETA	O360J2A		A1902	CLUTCH ASSY

THE PILOT REPORTED A CLUTCH LIGHT COMING ON FOR MORE THAN 5 SECONDS, FOLLOWED THE PROCEDURES IN THE POH AND MADE A PRECAUTIONARY LANDING. UPON VISUAL INSP IT WAS DEFECTED THAT ONE OF THE DRIVE BELTS IN THE CLUTCH SYS HAD FAILED AND CAUSED THE CLUTCH ACTUATOR TO ENGAGE CAUSING THE CLUTCH LIGHT TO ILLUMINATE. THERE WERE NO DAMAGES TO THE ROTORCRAFT OR ANY INJURIES TO THE PILOTS. DRIVE BELTS WHERE REPLACED AND THE ROTORCRAFT WAS RETURNED TO SERVICED.

CA081028006	ROBSIN	LYC	BAR	CRACKED
10/24/2008	R44	O540F1B5	C0183	SPRAG CLUTCH

(CAN) DURING AN AES MIDLIFE INSP FOUND: SPRAG CAGE CRACKED (2) CROSSBARS SHAFT WORN UNDERSIZE HOUSING WORN OVERSIZE.

2009FA0000017	ROBSIN		MUFFLER	FAILED
12/23/2008	R44RAVENII		C16932	EXHAUST SYSTEM

MUFFLER CAN BLOW OUT AT TAIL PIPE CONNECTION AND COLLECTOR FAILURES, BULGES AND BLOW OUTS. WEAK MATERIAL, USE THICKER AND BETTER MATERIAL. PEOPLE ARE GETTING SICK AND/OR BAD HEADACHES. CO DETECTORS ARE SOUNDING OFF IF YOU HAVE ONE. (K)

2009FA0000018	ROBSIN	LYC	COLLECTOR	DAMAGED
12/23/2008	R44RAVENII	IO540AE1A5	C1695	IB AREA 3 TO 1

EXHAUST COLLECTORS 3 TO 1 TYPE. BULGES AND BLOW OUTS.

CA081126008	ROBSIN	LYC	CASE	CRACKED
11/21/2008	R44RAVENII	IO540AE1A5	14924HTH	STARTER GEN

(CAN) STARTER CASING CRACKED.

CA081127002	SKRSKY	BEARING	FAILED
11/3/2008	S61A		MAST

(CAN) S61MGB S/N: A14-J-10-79-1119 SUPPLIED, HAD A INDICATION ON THE MGB BEING CONTAMINATED WITH METAL. REMOVED THE MGB FROM THE ACFT, AND RETURNED IT TO HELI-ONE TSN: 15634:00 TSO: 772:29 HELI-ONE DISASSEMBLED THE MGB TO FIND THAT THE MAST DUPLEX BRG P/N:SB1357-103 ,S/N: J0359 WAS THE CAUSE OF THE CONTAMINATION. REPLACEMENT OF BRG REQUIRED. MAST DUPLEX BRG P/N:SB1357-103 ,S/N: J0359 COMPANY SQID NR08-07990.

CA081128002	SKRSKY	BEVEL GEAR	UNSERVICEABLE

11/3/2008	S61A	S613723053102	M/R GEARBOX

(CAN) BROKEN GEAR TOOTH FOUND IN FILTER REPAIR-BROKEN GEAR TOOTH FOUND IN FILTER OF S61 MGB SN: A14-215. MGB WAS REMOVED FROM ACFT HS-HTA AND REURNED TO HELI-ONE TO BE REPAIRED TSN: 31804:41 TSO: 769:56 DISASSY DONE AT HELI-ONE TO FIND THAT THE INPUT BEVEL GEAR PN: S6137-23053-102 SN: E128-00271WAS THE DAMAGED PART. INPUT BEVEL GEAR PN: S6137-23053-102 SN: E128-00271. COMPANY SQID NR 08-08045.

CA081127001	SKRSKY	HOUSING	CRACKED
11/3/2008	S61N	S613520670043	M/R GEARBOX

(CAN) CRACK FOUND ON THE FRONT/RT SIDE OF LWR HSG REPAIR TO LWR HSG CARRIED OUT IAW RDC NO: P-RH07-038 H1E-02. THIS AREA OF THE HSG IS ALWAYS HIGHLY SCRUTANIZED DURING NDT.

CA081127007	SKRSKY	SHAFT	CORRODED
7/8/2008	S76	7635109626	M/R GEARBOX

(CAN) MGB PN:76351-09600-044 SN:A231-00044 IN FOR OVERHAUL. FOLLOWING CLEANING AND INSP OF NEW SPLINE SHAFT, CORROSION WAS FOUND AT INNER AND OUTER SPLINES. ALL REMAINING SPLINES SHAFTS (QTY:6) PULLED FROM STOCK AND INSPECTED, NO EVIDENCE OF CORROSION FOUND. CORROSION PITTING FOUND ON NEW SPLINE SHAFT PULLED FROM STOCK. RETURN TO VENDOR FOR FULL WARRANTY COMPANY SQID NR 08-05027.

CA081128003	SKRSKY	GEARBOX	FAILED
11/27/2008	S76		MAIN ROTOR

(CAN) MGB CHIP LIGHT INDICATION MGB PN:76351-09600-044,SN:A231-00107 REC`D AT HELI-ONE FOR REPAIR. TSN:8638:39 TSO:2516:54 FOLLOWING DISASSEMBLY AND INSPECTION OF MGB, RT OUTPUT ALIGNMENT BRG WAS IDENTIFIED AS THE CAUSE FOR METAL GENERATION WITH HEAVY SPALLING EVIDENT AT ROLLER PATHWAY OF OUTER RACE. FLUSH MGB AND REPLACE DISCREPANT BEARING. COMPANY SQID NR 08-8606.

CA081128004	SKRSKY	BEARING	DAMAGED
11/27/2008	S76	SB2151107	M/R GEARBOX

(CAN) MGB CHIP LIGHT INDICATIONS MGB P/N:76351-09600-044 S/N:A231-00299 REC`D AT HELI-ONE FOR REPAIR. TSN:2037:48 HRS. FOLLOWING DISASSY AND INSP OF MGB THE RT OUTPUT ALIGNMENT BRG WAS FOUND TO BE THE CAUSE FOR THE METAL GENERATION WITH HEAVY SPALLING AT ROLLER PATHWAY OF BRG OUTER RACE. ADDITIONAL BRS INDICATE INITIAL STAGES OF SPALLING. REPLACE WITH SERVICEABLE BRS. COMPANY SQID NR 08-08605.

CA081127004	SKRSKY	CONE	DAMAGED
9/11/2008	S76	SB3354102	M/R GEARBOX BRG

(CAN) INSPECTION OF CAGE SHAKE ON TAPERED ROLLER BRGS PN: SB3354-102 WAS DIMENSIONALLY INSPECTED IAW (SA4047-76-7-8 CHANGE 9, 31/MARCH/2006 IAW PARA. 2-52A) AND DETERMINED TO EXCEED AVERAGE MAXIMUM ALLOWABLE CAGE SHAKE LIMITS (.017 INCH) PRIOR TO INSTALLATION ON MGB PN: 76351-09600-044 SN:A231-00184. RETURN TO VENDOR FOR WARRANTY. UNSERVICEABLE BRG CONE RETURNED TO VENDOR AWAITING WARRANTY RMA NR. (COMPANY SQID NR 08-06654)

CA081127008	SKRSKY	PINION GEAR	CORRODED
6/20/2008	S76	7635109058102	M/R GEARBOX

(CAN) CORROSION PITTING FOUND ON BORE ID OF (2) HELICAL PINIONS HSI (P.A.P) MGB PN:76351-09500-044 SN:A081-00196 REC`D FOR O/H. PRIOR TO ASSY INSP OF NEW CUSTOMER SUPPLIED HELICAL PINIONS (X2), REVEALED CORROSION PITTING IN BORE ID OF BOTH PINIONS AT AREA OF FWD ROLLER PATHWAY. COMPANY SQID NR08-04520.

CA081127009	SKRSKY	SHAFT	CORRODED
6/11/2008	S76	7635109028105	M/R GEARBOX

(CAN) CORROSION FOUND ON NEW QUILL SHAFT MAIN GEARBOX O/H PN:76351-09500-044, SN:A081-00110 FOLLOWING CLEANING AND INSPECTION OF NEW QUILL SHAFT (P/N,S/N LISTED BELOW), MULTIPLE CORROSION

PITTING CLUSTERS FOUND ON INTERNAL SPLINES AND ID OF PART.

CA081127011	SKRSKY	BEARING	FAILED
6/6/2008	S76A	SB3202A2	M/R GEARBOX

(CAN) PERFORMED CAGE SHAKE ON NEW BRGS IAW MFG ACFT ENGINEERING INSTRUCTION EI NR E76-702-35-1601. RESULTS FAILED INSP RETURN TO VENDOR FOR WARRANTY. UNSERVICEABLE BRG RETURN TO VENDOR AWAITING WARRANTY RMA NR COMPANY SQID NR 08-04194.

CA081127012	SKRSKY	HOUSING	CORRODED
4/17/2008	S76A	7635109008056	M/R GEARBOX

(CAN) GEARBOX REMOVED FOR EXCESSIVE CORROSION AROUND OIL FILTER HSG FITTING. MAIN GEARBOX RECEIVED AT HELI-ONE FOR REPAIR AT TT:10961:18 HRS. TSO:2969:48 HRS. FLUID ADAPTER (FITTING) REMOVED FROM LWR HSG OIL FILTER AREA AND CORROSION WAS CLEANED/REMOVED TO ALLOW FOR INSPECTION. EXTENSIVE CORROSION WAS FOUND AT FLUID ADAPTER PORT AND LOCK RING AREA BEYOND MAXIMUM REPAIRABLE LIMITS IAW REF:SA4047- 76-7-8,CHG.9-31MAR2006. REPLACE UNSERVICEABLE LOWER HOUSING P/N:76351-09008-056 S/N:C065-00098 (T.T: UNK) WITH NEW/OVERHAULED EQUIPPED WITH NEW VERSION FLUID ADAPTER P/N:RFSK9812-13. MOST LIKELY INSUFFICIENT SURFACE PROTECTION AT DAMAGED AREA.

CA081127013	SKRSKY	BEARING	UNSERVICEABLE
3/20/2008	S76A	SB2151107	

(CAN) GEARBOX MAKING METAL TSN:2969:43 HRS. GEARBOX RECIEVED FOR PREMATURE OVERHAUL DUE TO METAL CONTAMINATION. DURING INSP PROCESS , RT SPUR PINION ALIGNMENT ROLLER BRG SB2151-107 S/N:2659 (LOCATED AT UPPER HSG COUNTERBORE) WAS FOUND TO BE BREAKING UP AT OUTER RACE ROLLER PATHWAY. FOLLOWING COMPLETION OF GB INSP THIS BRG WAS CONSIDERED AS THE SOURCE FOR THE METAL CONTAMINATION. REPLACE BRG DURING OVERHAUL.

CA081127003	SKRSKY	GUIDE	MISMANUFACTURED
10/30/2008	S76A		SWASHPLATE

(CAN) MGB PN: 76351-09600-043 S/N:A231-00085 FOLLOWING INSP OF SWASHPLATE GUIDE PN:76351-09029-101,SN:A028-00343 FROM ABOVE MENTIONED MGB,THE MEASUREMENT TAKEN AT RADIUS (J) (REF:SA4047-76-7-8,CHG.9) INDICATES BELOW MINIMUM REQ`D RADIUS OF.040 INCH. IAW O/H MANUAL REF, SWASHPLATE GUIDES ARE AMONG THE LIST OF ITEMS CLASSIFIED AS FLIGHT SAFETY PARTS. PART HAS BEEN TAGGED REJECTED AS THIS MINIMUM .040 INCH RADIUS IS CONSIDERED A CRITICAL CHARACTERISITIC. RETURN TO VENDOR FOR WARRANTY (THIS PART HAS A TIME LIFE OF 20,000 HRS AND HAS ONLY BEEN IN SERVICE FOR ONE MGB O/H OF 3242.7 HRS, SEE MGB LOG CARDS) MOST LIKELY MACHINED INCORRECTLY DURING MFG PROCESS. SQID NR 08-07896.

MV1R200808429	SKRSKY	BLADE	DELAMINATED
12/17/2008	S76A	7615009100053	MAIN ROTOR

DURING 3 YEAR MAIN ROTOR BLADE INSP FOUND DELAMINATION IN BLACK MAIN ROTOR BLADE ROOT END. DATA SENT TO MFG FOR EVALUATION. TOTAL DELAMINATED AREA IS 1.472 SQUARE INCHES.

2008FA0000906	SOCATA	LYC	GARRTT	SEAL	FAILED
11/22/2008	TB21	TIO540AB1A			TURBOCHARGER

PILOT REPORTED THAT ENGINE LOST OIL PRESSURE AT AN ALTITUDE OF 8000 FT ABOUT 14 MILES WEST OF MUNICIPAL AIRPORT. HE WAS ABLE TO MAKE AIRPORT AND SHUTDOWN THE ENGINE AFTER COMING TO A STOP ON THE RUNWAY. REPORTED THAT WHEN THE ACFT LEFT, THE OIL WAS CHECKED AND WAS INDICATING 10 QTS. ON THE DIPSTICK. THE ENGINE WAS EXAMINED WITH A REP FROM FAA PRESENT. IT WAS DETERMINED AFTER EXAMINING THE TURBOCHARGER AREA THAT THE INTERNAL SEALS TO TURBO MUST HAVE FAILED, CAUSING OIL TO ENTER BOTH INTAKE SYS AND HOT SIDE OF TURBO. SCAVENGE PORT OF TURBO WAS INSPECTED AND FOUND TO BE UNOBSTRUCTED. OIL WAS DRAINED FROM SUMP, YIELD WAS 1.5 QTS. (K)

2009FA0000013	STBROS	CONTROL CABLE	BROKEN
12/17/2008	SD360		RT PROPELLER

THE ACFT RT PROP CABLE BROKE. ACFT RETURNED TO HONOLULU STATION FOR INSPECTION AND REPAIR.

CA081029005	STBROS	PWA	OIL SYSTEM	LEAKING
9/15/2008	SD360	PT6A65AR		ENGINE

(CAN) DURING CRUISE, THE PILOTS OBSERVED ENG TEMPERATURE RISING THRU 800°C AND PEAKING OVER 1000°C. FLAMES WERE NOTICED FROM THE EXHAUST. THE ENG WAS SHUTDOWN AND FIRE BOTTLES DISCHARGED. A SINGLE ENG LANDING FOLLOWED. POST FLIGHT INSPECTION REVEALED OIL LEAKING FROM GAS GENERATOR CASE AND EXHAUST AREA. THE ENG WAS REMOVED AND SENT FOR INVESTIGATION WHERE TEARDOWN REVEALED A NR 1 BEARING DISTRESS. MFG WILL CONTINUE INVESTIGATING THE EVENT AND ADVISE OF ROOT CAUSE ONCE ESTABLISHED.

CA080725003	UROCOP	TMECA	HYDRAULIC SYSTEM	MALFUNCTIONED
7/20/2008	EC120B	ARRIU2F		

(CAN) AT GROUND IDLE, THE NORMAL PROCEDURE IS TO TEST ACCUMULATORS BY PUSHING THE ACCUMULATORS BUTTON ON, AND THE HYD LIGHT ILLUMINATES , AND PROCEED TO TEST THE ACTUATORS BY MOVING THE CYCLIC FWD AND AFT, ABOUT 4-5 INCHES TRAVEL, EIGHT TIMES, THEN RT AND LT, THE SAME. NORMAL (NORMALLY, DO NOT TOTALLY DEPLETE THE ACCUMULATOR'S PRESSURE). THIS WAS NORMAL, NO PROBLEM ANY OF THE TEST OF THIS SYS AT ANY TIME. PUSH THE SWITCH AGAIN, AND THE ACCUMULATORS BACK ON, HYD LIGHT OUT. THE HYD CUT OFF TEST. STILL OPERATING AT GROUND IDLE. COLLECTIVE LOCKED DOWN, SWITCHING OFF THE HYD SWITCH ON COLLECTIVE, HYD LIGHT ILLUMINATES, AND WHAT THE CYCLIC IS SUPPOSED TO DO IS PULL IT SELF TO THE CENTER NEUTRAL POSITION, WITH RESISTANCE IF MOVED OUT OF THIS POSITION OF MORE THEN 1 INCH (EASY TO MAKE A 2 INCH CIRCLE). THIS TIME, WHAT HAPPENED WHEN THE HYD SWITCH WAS SWITCHED, FOUND THAT THERE WAS NO RESISTANCE TO THE FWD LT AND IT ALMOST PULLS THE CYCLIC IN THAT DIRECTION. AND THE 2 INCH CIRCLE OF RESISTANCE INCREASED TO ABOUT A 4 TO 6 INCH CIRCLE AND NOT A VERY STRONGER RESISTANCE. (NORMALLY, RESISTANCE WOULD BE 5 TO 10 POUNDS OF FORCE, BUT FOUND LESS THEN 5 POUNDS FORCE TO MAKE THIS 4 TO 6 INCH PLUS CIRCLE). AFTER MOVING THE CYCLIC AROUND IN THIS CIRCLE, IT SEEMED TO SNAP OUT IF IT AND WAS BACK TO THE NORMAL OPERATION. TRIED TO REPEAT THIS FAILURE BUT BY TURNING THE HYD SWITCH OFF AND THEN BACK ON, BUT NO FAILURE. THIS ONLY HAPPENS ONE IN ABOUT (6) STARTS IN THAT DAY. ON JULY 19, LAST START OF THE DAY OF (4) STARTS THE ACCUMULATOR TEST WAS GOOD, BUT THE HYD CUT OFF FAILED. ALL THE SAME AS ABOVE, BUT THIS TIME, THE CYCLIC HAD NO RESISTANCE TO THE AFT RT WITH THE SAME 4 INCH CIRCLE WITH A LESS PRONOUNCED FORCE. AFTER A COUPLE MORE ROTATION OF THE CYCLIC, AGAIN, IT SNAPPED OUT OF IT AND BECAME NORMAL OPERATION.

2008FA0000917	UROCOP	TMECA	BEARING	UNSERVICEABLE
12/17/2008	EC120B	ARRIU2F		STARTER GEN

PILOT COMPLAINED OF A SEVERE ENGINE VIBRATION AND HOWLING NOISE EMANATING FROM THE ENGINE AREA, DURING ALL PHASES OF ENGINE OPERATION. THE STARTER WAS REPLACED AND THE VIBRATION CEASED. (K)

CA081125015	UROCOP	PWA	ENGINE	MAKING METAL
11/15/2008	EC135P1	PW206B		NR 1

(CAN) DURING CRUISE FLIGHT, THE NR 1 ENG CHIP DETECTOR LIGHT ILLUMINATED. THE PILOT "BURNED" THE CHIP DETECTOR AND THE LIGHT WENT OUT. SHORTLY AFTER THE LIGHT CAME ON AGAIN AND THE PILOT BURNED AGAIN AND THE LIGHT WENT OUT. HE DECIDED TO ABORT THE MISSION AND RETURN TO BASE DURING WHICH TIME HE HEARD A LOUD NOISE FROM THE ENGINE WITH PARAMETER DECAYING. THE ENG WAS SECURED AND AN UNEVENTFUL SINGLE ENGINE LANDING FOLLOWED. GROUND INSP FOUND HEAVY METAL CONTAMINATION AND FRACTURED POWER TURBINE BLADES. MFG WILL CONTINUE INVESTIGATING THE EVENT AND ADVISE OF ROOT CAUSE ONCE ESTABLISHED.