U.S. Department of Transportation
Federal Aviation Administration

AFS-600
Regulatory Support Division

ADVISORY CIRCULAR

43-16A

AVIATION MAINTENANCE ALERTS

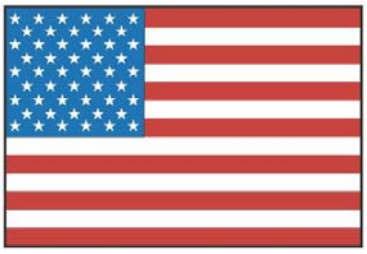

ALERT NUMBER 366

JANUARY 2009

CONTENTS

AIRPLANES

BEECHCRAFT.....1
BOEING 3
CESSNA 5
CIRRUS 15
LEARJET.....15
PIPER.....18

POWERPLANTS

CONTINENTAL 18

AIR NOTES

INTERNET SERVICE DIFFICULTY REPORTING (iSDR) WEB SITE.....19
IF YOU WANT TO CONTACT US 20
AVIATION SERVICE DIFFICULTY REPORTS 21

U.S. DEPARTMENT OF TRANSPORTATION
FEDERAL AVIATION ADMINISTRATION
WASHINGTON, DC 20590

AVIATION MAINTENANCE ALERTS

The Aviation Maintenance Alerts provides a common communication channel through which the aviation community can economically interchange service experience, cooperating in the improvement of aeronautical product durability, reliability, and safety. This publication is prepared from information submitted by those who operate and maintain civil aeronautical products. The contents include items that have been reported as significant, but have not been evaluated fully by the time the material went to press. As additional facts such as cause and corrective action are identified, the data will be published in subsequent issues of the Alerts. This procedure gives Alerts' readers prompt notice of conditions reported via a Malfunction or Defect Report (M or D) or a Service Difficulty Report (SDR). Your comments and suggestions for improvement are always welcome. Send to: FAA; ATTN: Aviation Data Systems Branch (AFS-620); P.O. Box 25082; Oklahoma City, OK 73125-5029.

(Editor's notes are provided for editorial clarification and enhancement within an article. They will always be recognized as italicized words bordered by parentheses.)

AIRPLANES

BEECHCRAFT

Beechcraft: E90; Cracked Wing Spar Caps; ATA 5711

An unknown submitter says, "The forward outboard, lower wing spar caps are cracked. *(These cracks—on both L and R assemblies...)* radiate out from the fourth Huck rivet forward, *(passing)* through the wing attach hinge.

"This aircraft was inspected 15 months ago (404.2 hours) by eddy current. No cracks were found at that time." *(Wing lower spar cap part numbers: L/H: 000-110012-1; R/H: 000-110012-2.*

Part Total Time: 8,875.6 hours.

Beechjet: 400A; Pitch-Trim Electrical Failure; ATA 2797

A repair station technician says, "The pitch-trim *(was found to be)* inoperative. *(I)* removed the right forward galley and the right forward partition. A wire bundle was found chafed behind the partition. I repaired three wires that were chafed *(completely)* through to the conductors. Clearance was provided between the wire bundle and the partition, and anti-chafe material was installed. At the time of the repair no other components had malfunctioned from the other two chafed wires." *(Primary wire P/N: C352B20.)*

This is where one power wire chaffed against the fwd partition.

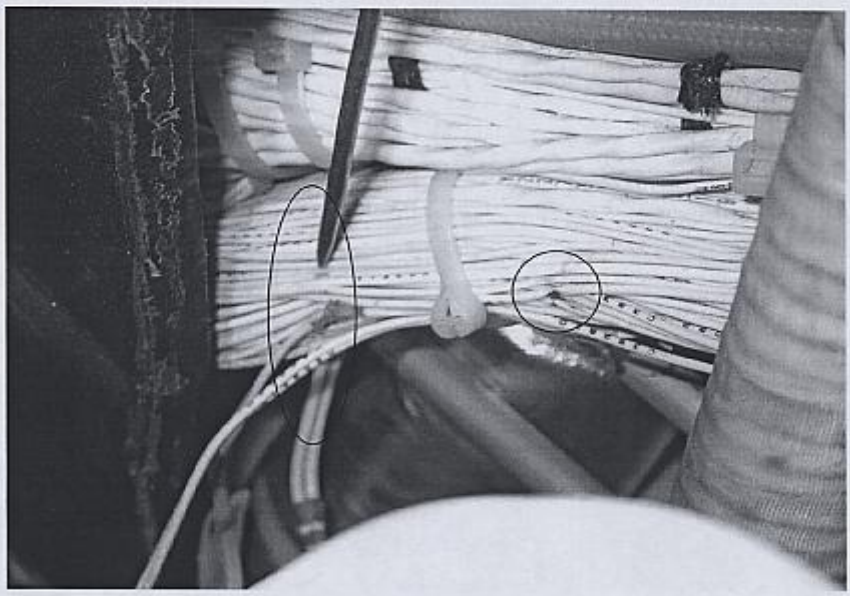

Circled areas where the chaffing is.

Part Total Time: 3,287.1 hours.

BOEING

Boeing 700 Series: *(see listing);* Over-heating Static Inverter; ATA 2422

(The following safety article is provided by Aviation Safety Inspector Mona Tindall from the Aircraft Maintenance Division in Washington D.C. The affected Boeing models include series 737-300, -400, -500, -600, -700C, -800, -900; model/series 747-400; and models 757, 767, and 777 aircraft. This writing is published as received. Contact information is found at the discussion's end.)

The Federal Aviation Administration (FAA) received reports that the static inverter installed on many Boeing airplanes can become overheated, resulting in smoke in the flight deck and cabin, and loss of the electrical standby power system. In one incident it was reported that a Boeing 757 airplane experienced smoke in the cockpit and cabin after engine start. The flight attendants and passengers were evacuated. The source of the smoke was found to be from the static inverter. Maintenance replaced the static inverter and the mounting tray which were both severely damaged by high heat. The remaining fleet was checked and several static inverters exhibited overheating indications. Units in ready stock were returned to the vendor.

Boeing has issued service bulletins for accomplishing the specified static inverter modification. The service bulletins refer to Avionic Instruments, Inc. Service Bulletin 1-002-0102-1000-24-28, Revision A, dated June 22, 2005; and Revision B, dated July 24, 2006, as additional sources of service information for accomplishing the modification. Boeing's service information may be obtained from Boeing Commercial Airplane Group, P.O. Box 3707, Seattle, Washington 98124-2207.

On January 12, 2009, the Federal Register published a revised supplemental notice of proposed rulemaking (SNPRM), docket number 2002-NM-12-AD. This action is intended to address the identified unsafe condition. Any person may examine this docket on Internet at http://www.regulations.gov

(For further information, contact Aviation Safety Inspector Mona Tindall, Aircraft Maintenance Division, 950 L'Enfant Plaza, S.W. 5th Floor, Washington D.C., 20024; phone 202-385-6438; mail monalisa.tindall@faa.gov)

Part Total Time: (n/a).

CESSNA

Cessna: 172R; Tire Tube Failure; ATA 3245

The Director of Maintenance for a repair station writes, "...this aircraft has experienced three landing gear tire tube failures. These failures all occurred in the sidewall of the tubes. There was no evidence of the tubes having been pinched or otherwise damaged during installation. Damage ranged from small, 1/8 inch splits to a large ½ inch split. Examination of the tube sidewalls evidenced what appears to be some form of 'weather checking' that normally appears on old rubber components. All *(of these)* tubes were of recent manufacture.

"One failure occurred on a G15/6.00/6 tube (P/N 302-246-401) with a total time in service of 123.0 hours. Two failures occurred on 5.00x5 tubes (P/N 302-013-400) at 125.0 hours and 112.0 hours, respectively. All were *(sent)* to the Goodyear Technical Center in Akron, Ohio for evaluation. This evaluation is currently in progress. Note: at each tube failure new tires were installed. The removed tires showed no evidence of defects which may have caused this problem. Attached are photos of the most recent failure."

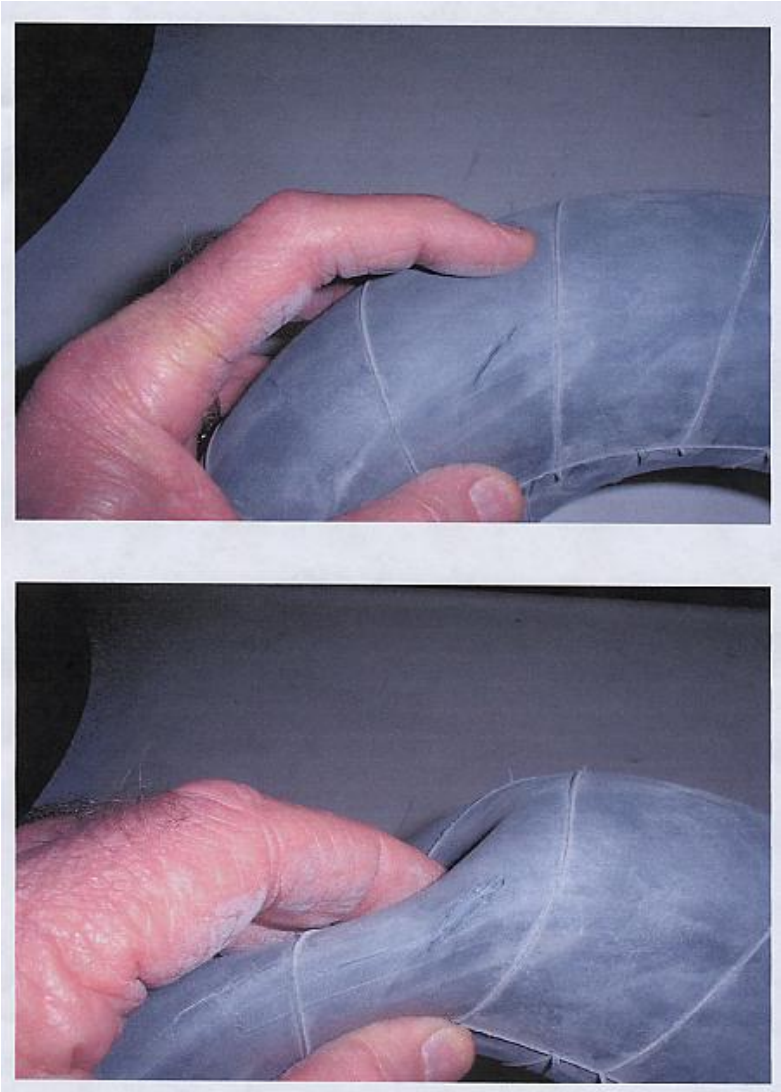

Parts Total Time: 120.0 hours (avg.).

Cessna: *(Multiple Models);* Exhaust System; ATA 7810

(The following report is provided by Aerospace Engineer Jeff Janusz from the Wichita Aircraft Certification Office. Affected Cessna models are the 310, 320, 321, 335, 340, 401, 402, 404, 411, 414, and 421 Series aircraft. This counsel is published as received, along with contact information at the article's end.)

This article provides needed attention to the severe consequences of failing to properly maintain exhaust systems on Cessna twin engine airplanes. All owners, maintenance technicians, and inspectors are encouraged to reacquaint themselves with the requirements of Airworthiness Directive (AD) 2000-01-16.

The twin engine, Cessna design is unique—having its turbocharger hard-mounted to the airframe. Consequently, the exhaust system must accommodate the movement of the engine on its shock mounts by a system of ball and slip joints. If those joints stiffen up in service (as they do), significant stress may be transferred to exhaust components aft of the slip joints (specifically elbows—and the *Wye* duct header bolted under the turbocharger). This can result in fatigue failure, particularly at the flanges where the components are joined by V-band clamps. The twin Cessna's exhaust is also unique in that the exhaust plumbing passes through tunnels in the canted airframe bulkhead (via elbows), and through the engine nacelles (via tailpipes). They are quite difficult to inspect visually. This is why the *pressure test and tailpipe removal* mandated by AD 2000-01-16 is so critical. Additionally, unlike other manufacturers' aircraft, the twin Cessna models mount their engines on aluminum box beams passing through the firewall and tying into the wing structure. The exhaust plumbing passes very close to these aluminum engine mount beams. An exhaust failure in this area can burn a hole in this part, allowing hot exhaust gas to flow through the beam—routing behind the firewall in proximity to the aluminum cross-feed fuel lines. This scenario can lead to overheating and rupture of the fuel-cross feed line and result in an uncontrolled, fuel-fed fire. This failure has led to a number of fatal accidents. Additionally, 300 series and early 400 series Cessna twins are not equipped with cross-feed shutoff valves, so in the event of an in-flight fire it is impossible to shut off the fuel supply to these cross-feed lines.

The Cessna twin exhaust systems have been the subject of numerous FAA AD's and NTSB Safety Recommendations since the 1970's. AD 2000-01-16 was developed through an FAA/Industry effort in the late 1990's to address numerous exhaust system failures and fatal accidents (30 fatal in 30 months). With the development of the AD, the FAA elected to manage an unsafe condition on these products by means of mandatory repetitive inspection requirements as defined in the directive. It is critical that it be understood—these exhaust system failures can result in an undetected and uncontrolled fuel-fed fire, resulting in engine beam, canted bulkhead and/or firewall damage, and potentially catastrophic wing failure.

Nine years after the implementation of AD 2000-01-16, there is evidence the AD required inspections are not being conducted properly—or not at all. "Pencil-whipped" is the ubiquitous term often suggested as cause for this problem. It means, of course, "...failure to perform." There may also be a lack of understanding of the AD requirements, experience with the AD, or the criticality to safety these required exhaust system inspections pose.

There is safety data indicating the AD has been effective, but only when accomplished properly. The AD is lengthy, detailed, and has repetitive inspection requirements that cover many aspects of the exhaust system. The AD requires diligence to accomplish properly and offers few opportunities for carelessness without serious consequence. The criticality of this safety issue warrants direct, careful adherence to the AD, without short cuts or deviations which may lead to exhaust system failure.

New evidence indicates exhaust system parts have failed after satisfactorily passing numerous inspections and being *signed off* with no discrepancies noted. The failures appear to be due to improper assembly of the exhaust system after engine or exhaust system inspection, repairs or overhaul. The improper installation resulted in the parts being preloaded (pre-stressed), eventually leading to fatigue failure. These failures had also gone undetected through multiple inspection cycles.

Presented below is a single incident based on an airplane that went through the multiple AD required inspection cycles satisfactorily with no discrepancies. The story is presented in photographs (1 thru 6) of the exhaust *Wye* from the incident airplane. Unexplained loss of manifold pressure at high altitude prompted an owner's demand for a reexamination of the turbocharger and exhaust systems per the AD. The exhaust system *Wye* (on which the turbocharger is mounted) was found to have potentially catastrophic fatigue and burn through failures. This airplane had also satisfactorily completed two annual inspections. The *Wye* had 40 hours time since its last inspection. It was made of stainless steel and had no record of any weld repairs.

The owner, operator and maintenance community must be aware of the extreme importance of conducting detailed inspections per the AD, and taking the necessary corrective action. For example, when conducting the AD required pressure test, be sure all nacelle/cowling pieces, heat shields, inspection access panels (and the like) are removed. There should be a complete and unimpeded view of all joints and components being inspected or pressure tested. When conducting the required pressure test, be certain there leak-check fluid is being used. Be careful to not mask or miss serious problems by using a noisy, unregulated source of air in an attempt to listen for “hissing” from an exhaust joint.

It is extremely important all exhaust system components removed or replaced for any reason be installed carefully and without preload, using approved, accepted methods and techniques. Cessna has available service manual information and numerous service publications which address exhaust systems. These exhaust systems have a very good safety record if regularly and properly inspected, but the importance of these inspections to safety-of-flight cannot be overstated.

FAA would like to thank Byron Allen (340A owner/operator), Mike Busch (Savvy Aircraft Maintenance Management/Savvy Aviator, Inc.), John Frank and the Cessna Pilots Association for their assistance in bringing this significant and potentially catastrophic safety issue to the forefront again.

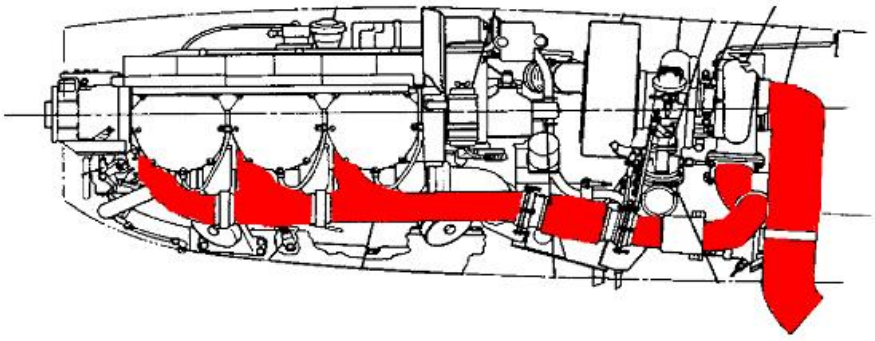

Typical Cessna twin exhaust installation shown in red above and below.

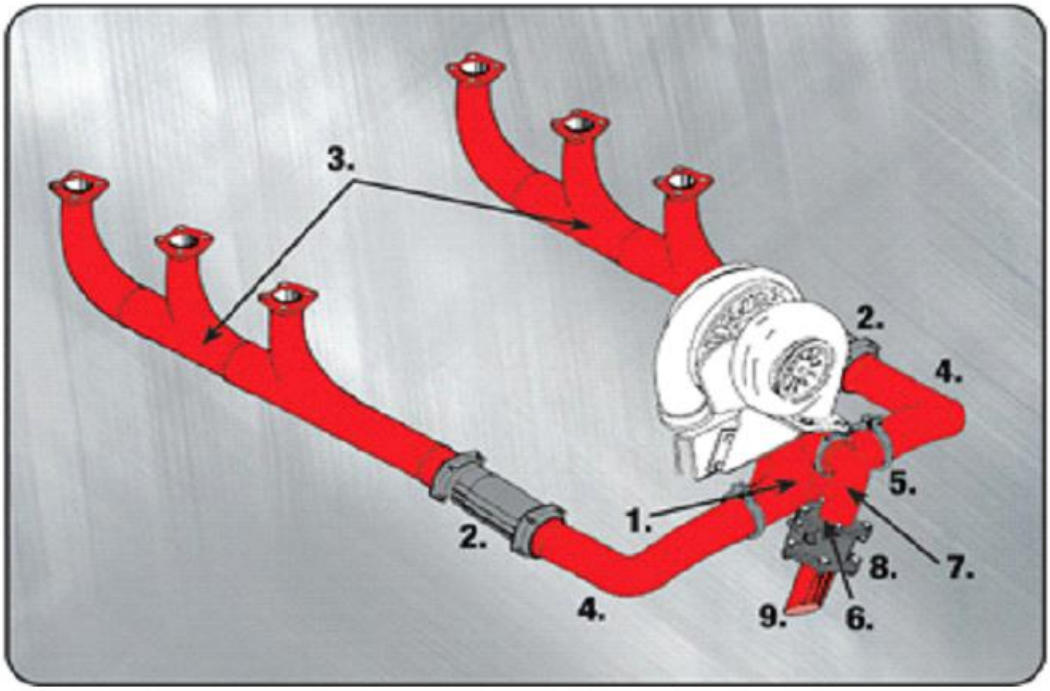

KEY

1. Wye duct, header assembly
2. Slip joint, ball joint
3. Riser
4. Elbow, manifold
5. Clamp
6. Waste-gate inlet
7. Wye to waste-gate elbow
8. Waste-gate valve
9. Waste-gate discharge

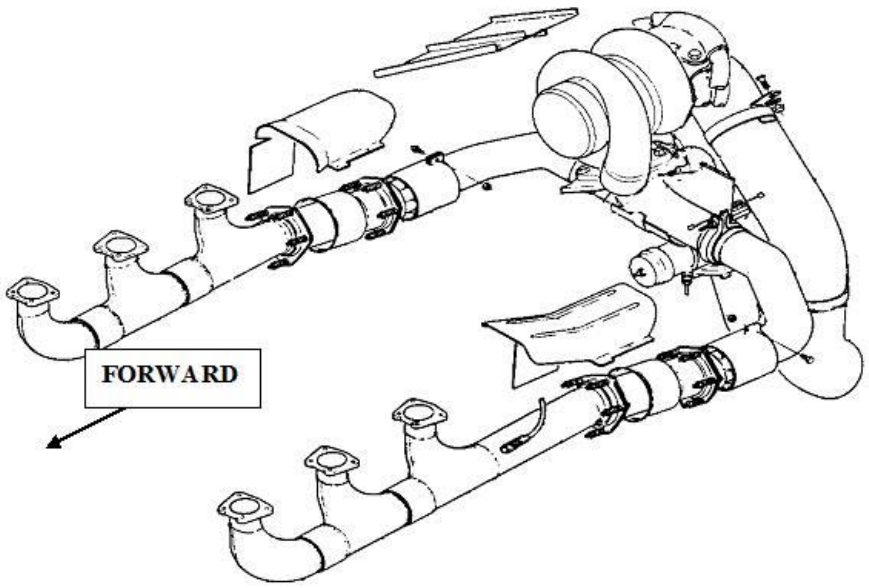

Typical Cessna twin exhaust system components with turbocharger installed above and without the turbocharger installed, below.
Refer to the applicable model Service Manual and Illustrated Parts Catalog for specific components.

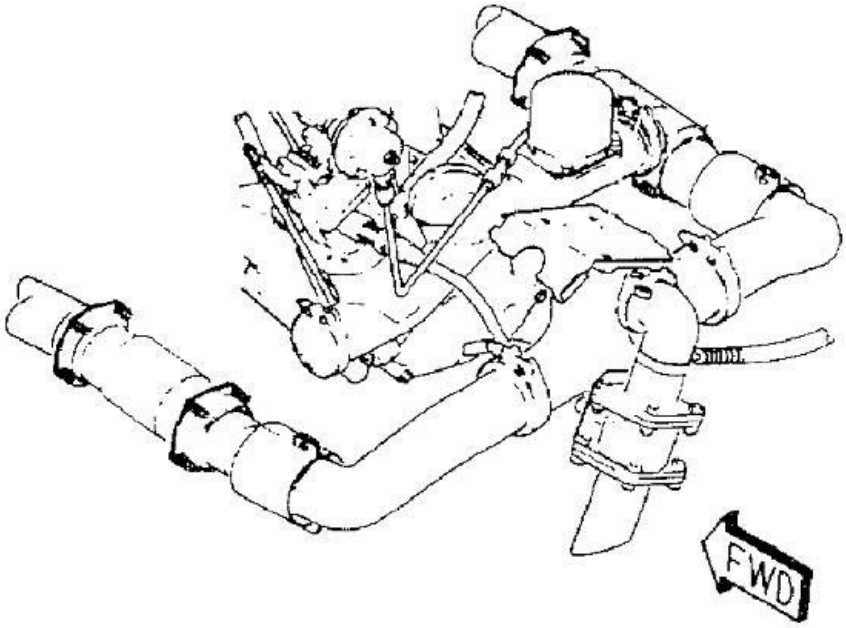

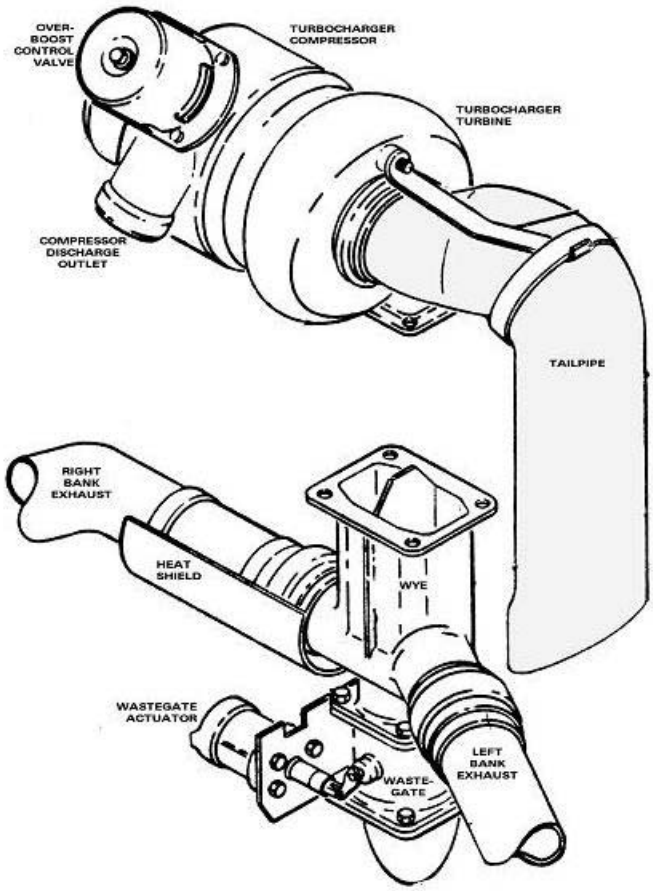

Typical Cessna twin exhaust system components aft of the slip joints.

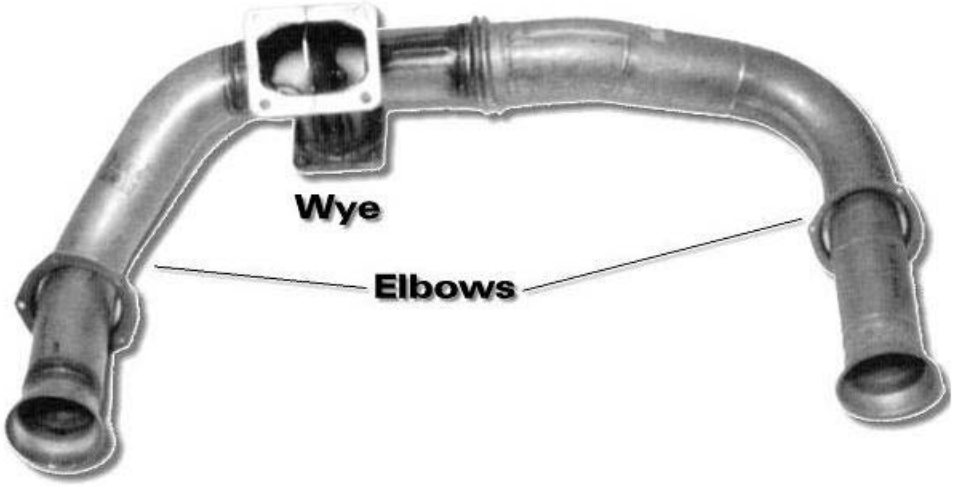

Typical Cessna twin exhaust system aft of the slip joint

New wye duct (header assembly); viewed as installed, looking forward.

Photo 1: Wye, with failed internal baffle.

Photo 2: Wye waste-gate elbow attach flange fatigue failure.

Photo 3:

Photo 4:

Photo 5: 3° deflection of the wye waste-gate attach flange due to preloaded installation and subsequent fatigue failure.

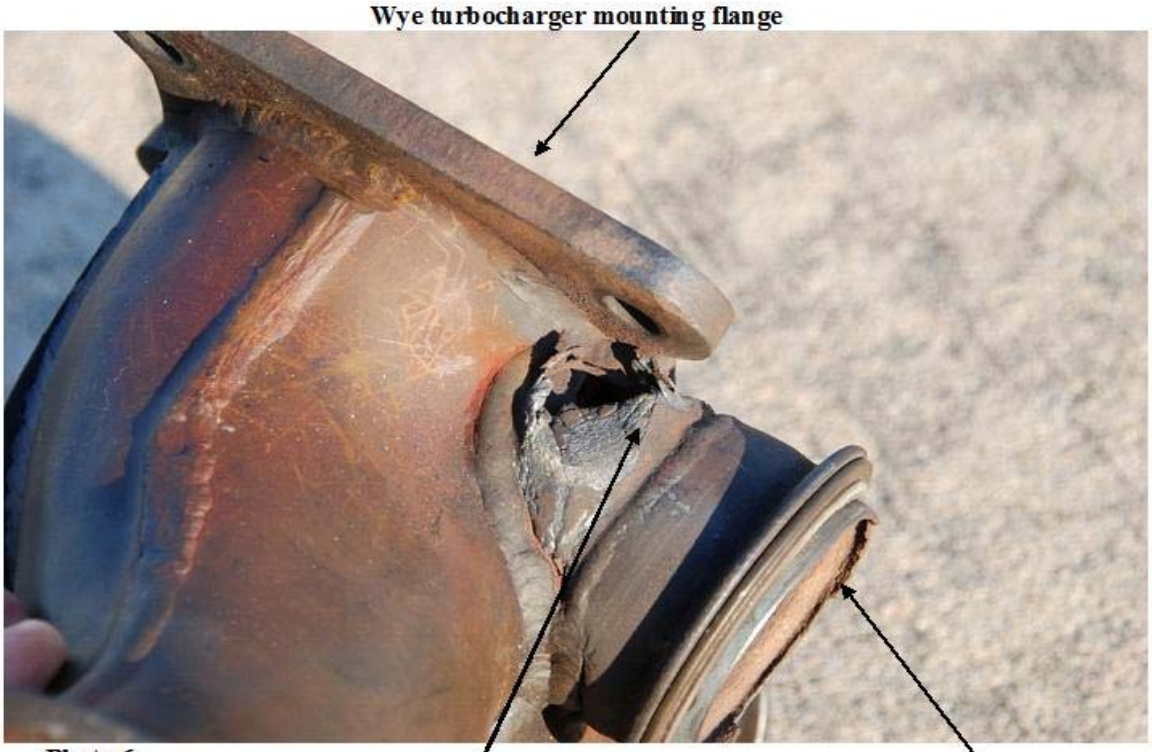

Photo 6:

Another typical wye which appears normal until thorough inspection reveals a burn through hole on the aft side (arrow)

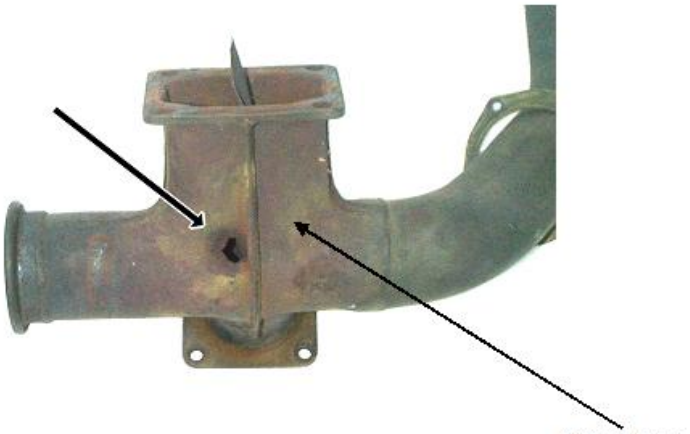

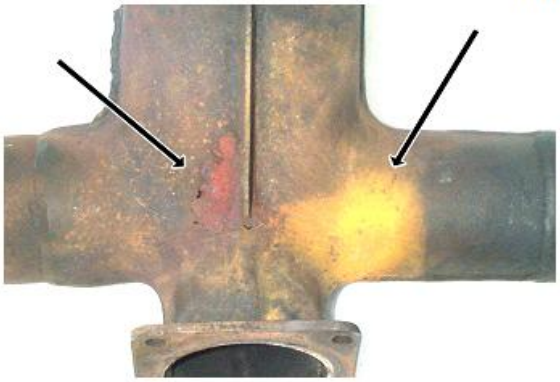

Another example of wye forward surface with pin holes through (left arrow) and staining (right arrow).

A tailpipe; with arrow pointing to crack through forward surface.

Crack through forward side of tailpipe.

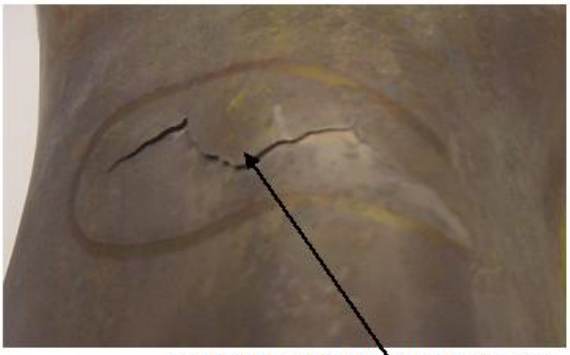

Crack through aft side of tailpipe

(Readers may acquire additional information by contacting the writer: Aerospace Engineer Jeff Janusz, Wichita Aircraft Certification Office, 1801 Airport Road, Room 100, Wichita, KS, 67209. Phone: 316-946-4148; mail: jeff.janusz@faa.gov)

Part Total Time: (n/a).

CIRRUS

Cirrus: SR22; Loose Turbocharger Oil Lines: ATA 8120

(A Continental IO-550-N is "connected" to this defect report.)

"While performing a 100 hour inspection on the engine," says the submitter, "the oil lines for the Tornado Alley Inc. turbo normalized system were being checked for security. The mechanic took the oil line that connects between the manifold pressure controller and the master waste gate in his hand and applied very little pressure to check for security. The oil line 'B-nut' broke loose from its torque with very little applied pressure. *(He)* inspected this 'B-nut' and the reducer fitting for abnormalities—none were found. *(This 'B-nut' fitting)* was torqued to the appropriate specifications per the original equipment manufacturer's instructions. Again the mechanic applied pressure to the line, again the 'B-nut' broke loose from its torque. These oil line 'B-nuts' do not come with measures for installation of safety wire.

"The safety concern is if other maintenance is being performed in the vicinity of these oil lines, a mechanic might inadvertently cause one of these 'B-nuts' to break loose from its torque."

(Oil line P/N: AE6682E0200-000-4; Reducer Fitting P/N: AN919-2. Not provided is the 'B-nut' reference--most likely an AN818 'Tube Nut.' Good catch—Ed.)

Part Total Time: 796.2 hours.

LEARJET

Learjet: 45; Failed Hydraulic Pressure Switch; ATA 2915

A mechanic describes the sequence of defect events which might have had an alternate ending. The story begins with the aircraft in final cruise condition. "Approximately 40 minutes into the flight at flight level 410...a white CAS *(caution annunciator)* advisory message appeared, indicating 'MAIN HYDRAULIC QUANTITY LOW.' The flight crew opened the appropriate crew checklist and flight manual, referencing the checklist *(heading)* 'Main Hydraulic Quantity Low.' *(Apparently...)* no action was required *(as none was provided for this entry.)* The pilot directed the copilot to refer to any abnormal procedures, or any emergency checklist procedures as a precaution for the loss of hydraulic quantity or pressure. The crew reviewed these procedures and continued in cruise. Approximately 15 minutes later (during descent) a white 'LEFT HYDRIAULIC PUMP LO' message began to appear intermittently, and hydraulic pressure fluctuations were noted on the pressure indication. Approximately 10 minutes later a drop in main hydraulic pressure to 70 psi *(and concurrent)* illumination of the 'MAIN HYDRAULIC PRESSURE' and 'SPOILER FAIL' messages were noted. The crew diverted to the designated alternate airport, completed abnormal checklist procedures, declared an emergency, and executed a safe landing. Inspection of the aircraft revealed the left main hydraulic pressure switch S9 *(P/N 7629001004-001)* had failed, allowing the hydraulic fluid to escape under pump pressure—until sufficient quantity was lost that cavitation resulted in both left and right hydraulic pumps. This cavitation apparently caused pressure spikes of sufficient force that both pump pressure output flexible hoses were ruptured. This caused the failure of both pumps and is suspected to have caused the landing gear control valve to also fail. This *(control)* valve was found inoperative during post-repair functional checks. The landing gear failed to retract when selected *(to the)* 'UP' position while the aircraft was on jacks and under pressure from a hydraulic power unit. Based on the damage

found on the S9 pressure switch, I believe the probable cause of the switch failure stems from pressure spikes within the hydraulic system, or an inadequate design of the switch assembly. Bombardier technical services was notified of the issue...they *(indicated an awareness)* of other switch failures. I would recommend a review of the hydraulic system be conducted to determine if pressure spikes are evident, especially during high flow/high pressure situations. I would also strongly urge Bombardier install hydraulic fuses in the supply lines to the 2 pressure switches (S8 and S9). I believe if a fuse had been installed this switch failure would have resulted in only a very small loss of hydraulic fluid, and the crew would have managed the indicated CAS message as a possible switch failure (given pressure indications from a separate transducer would have indicated normal pump output). This failure resulted in a repair exceeding $36,000.00 and 5 days out of service. If a hydraulic fuse had been installed (and functioning correctly) the repair costs would have been approximately $2,000.00 with 1 or 2 days out of service. Photos of the S9 pressure switch and ruptured hydraulic hoses are attached."

(Thank-you for your detailed effort, analysis, and photos—Ed.)

Part Total Time: (unknown).

PIPER

Piper: PA22-150; Corroded Nose Gear Mount; ATA 3221

A mechanic states, "*(I)* found the nose gear mount (P/N 13034-00) corroded, *(and quite...)* thin in spots on the lower tubes *(referenced from the inside)*. The wall thickness originally was 0.049 inches, and in the thin spots the wall thickness was less than 0.020 inches. The mount had been repaired by welding—one *(particular)* weld was a cold weld that cracked, allowing moisture into the inside of the tubing. The aircraft had an annual inspection 35 hours before failure. It failed on a soft-field landing *(after an engine malfunction)* and caused substantial damage. In my opinion, the thin wall from the corrosion is why the mount failed.

"My recommendation to prevent such recurrences is to inspect all welds for cracks, especially any field repairs. These welds should be examined for the quality of the weld (like cracks and pin holes) during the annual or 100 hour inspections—the punch test *(can be utilized at this time)*. Any welds or repairs in question should be *(performed again as necessary)*. The punch test information in Piper Service Bulletin 528D and AD 99-01-05 (latest revision) on the wing strut can be used (and adapted) to determine if the nose gear mount needs replacement or repair due to internal corrosion...."

Part Total Time: (unknown).

Piper: PA44-180; Cracked Nose Cone Spar; ATA 5343

An unknown technician states, "This spar assembly *(P/N 86282-010)* was found cracked at the left side nose gear support fitting. The crack radiated out from the aft lower bolt attachment (as viewed from below the nose structure flooring). Once the 'A' Frame support was removed *(the)* 2 inch crack *(could be seen)* in the spar web (not visible until the support was removed).

"The lower extrusion has been replaced with new at some point in the airplane's history (not at this shop). The extrusion's cracking was the reason for disassembly at this time.

"This *(defect)* is addressed in Piper AD 81-10-01, but the AD is not applicable to this serial number aircraft. Piper Service Bulletin number 1143 covers the later serial numbered aircraft.

Part Total Time: (unknown).

POWERPLANTS

CONTINENTAL

Continental: TSIO 550C1B; Broken Crankshaft; ATA 8520

(The following description involving a Piper PA46-310P doesn't provide speculation or detective work--it doesn't provide much discussion at all. However, it does include one dramatic photo—Ed.)

"The crankshaft broke," says this mechanic, "just aft of the propeller mounting flange" *(Crankshaft P/N: 649900)*.

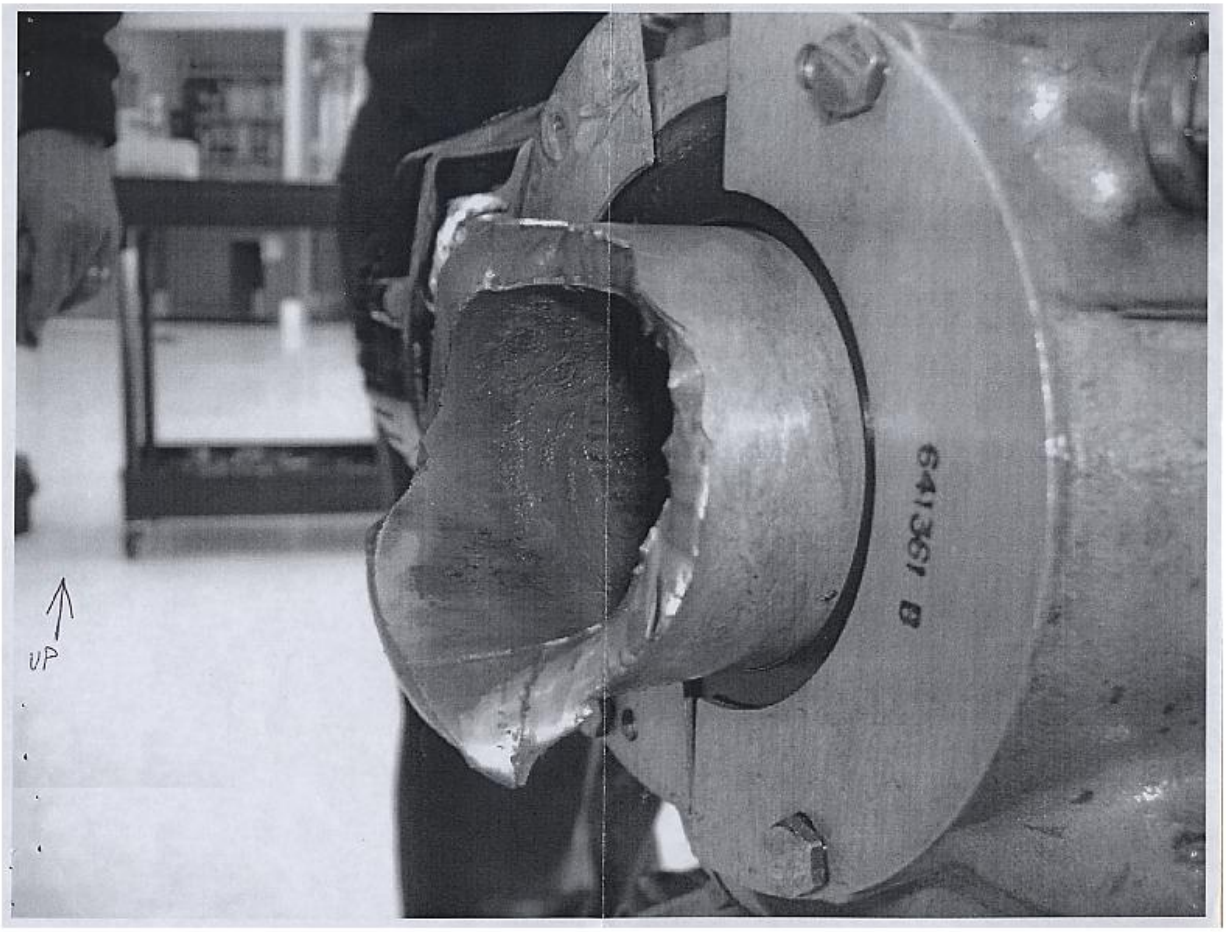

Part Total Time: (unknown).

AIR NOTES

INTERNET SERVICE DIFFICULTY REPORTING (iSDR) WEB SITE

The Federal Aviation Administration (FAA) Internet Service Difficulty Reporting (iSDR) web site is the front-end for the Service Difficulty Reporting System (SDRS) database that is maintained by the Aviation Data Systems Branch, AFS-620, in Oklahoma City, Oklahoma. The iSDR web site supports the Flight Standards Service (AFS), Service Difficulty Program by providing the aviation community with a voluntary and electronic means to conveniently submit in-service reports of failures, malfunctions, or defects on aeronautical products. The objective of the Service Difficulty Program is to achieve prompt correction of conditions adversely affecting continued airworthiness of aeronautical products. To accomplish this, Malfunction or Defect Reports (M or Ds) or Service Difficulty Reports (SDRs) as they are commonly called, are collected, converted into a common SDR format, stored, and made available to the appropriate segments of the FAA, the aviation community, and the general public for review and analysis. SDR data is accessible through the “Query SDR data” feature on the iSDR web site at: http://av-info.faa.gov/isdr/.

In the past, the last two pages of the Alerts contained a paper copy of FAA Form 8010-4, Malfunction or Defect Report. To meet the requirements of *Section 508, this form will no longer be published in the Alerts; however, the form is available on the Internet at: http://forms.faa.gov/forms/faa8010-4.pdf. You can still download and complete the form as you have in the past.

*Section 508 was enacted to eliminate barriers in information technology, to make available new opportunities for people with disabilities, and to encourage development of technologies that will help achieve these goals.

A report should be filed whenever a system, component, or part of an aircraft, powerplant, propeller, or appliance fails to function in a normal or usual manner. In addition, if a system, component, or part of an aircraft, powerplant, propeller, or appliance has a flaw or imperfection, which impairs or may impair its future function, it is considered defective and should be reported under the Service Difficulty Program.

The collection, collation, analysis of data, and the rapid dissemination of mechanical discrepancies, alerts, and trend information to the appropriate segments of the FAA and the aviation community provides an effective and economical method of ensuring future aviation safety.

The FAA analyzes SDR data for safety implications and reviews the data to identify possible trends that may not be apparent regionally or to individual operators. As a result, the FAA may disseminate safety information to a particular section of the aviation community. The FAA also may adopt new regulations or issue airworthiness directives (ADs) to address a specific problem.

The iSDR web site provides an electronic means for the general aviation community to voluntarily submit reports, and may serve as an alternative means for operators and air agencies to comply with the reporting requirements of 14 Title of the Code of Federal Regulations (CFR) Section 121.703, 125.409, 135.415, and 145.221, if accepted by their certificate-holding district office. FAA Aviation Safety Inspectors may also report service difficulty information when they conduct routine aircraft maintenance surveillance as well as accident and incident investigations.

The SDRS database contains records dating back to 1974. At the current time, we are receiving approximately 40,000 records per year. Reports may be submitted to the iSDR web site on active data entry form or submitted hardcopy to the address below.

The SDRS and iSDR web site point of contact is:

Pennie Thompson
Service Difficulty Reporting System, Program Manager
Aviation Data Systems Branch, AFS-620
P.O. Box 25082
Oklahoma City, OK 73125
Telephone: (405) 954-1150
SDRS Program Manager e-mail address: 9-AMC-SDR-ProgMgr@faa.gov

---

IF YOU WANT TO CONTACT US

We welcome your comments, suggestions, and questions. You may use any of the following means of communication to submit reports concerning aviation-related occurrences.

Editor: Daniel Roller (405) 954-3646
FAX: (405) 954-4570 or (405) 954-4655

E-mail address: Daniel.Roller@faa.gov

Mailing address: FAA, **ATTN: AFS-620 ALERTS**, P.O. Box 25082, Oklahoma City, OK 73125-5029

You can access current and back issues of this publication from the internet at: http://av-info.faa.gov/. Select the General Aviation Airworthiness Alerts heading.

AVIATION SERVICE DIFFICULTY REPORTS

The following are abbreviated reports processed for the previous month, which have been entered into the FAA Service Difficulty Reporting (SDR) System database. This is not an all-inclusive listing of Service Difficulty Reports. For more information, contact the FAA, Regulatory Support Division, Aviation Data Systems Branch, AFS-620, located in Oklahoma City, Oklahoma. The mailing address is:

FAA
Aviation Data Systems Branch, AFS-620
PO Box 25082
Oklahoma City, OK 73125

To retrieve the complete report, click on the Control Number located in each report. These reports contain raw data that has not been edited. Also, because these reports contain raw data, the pages containing the raw data are not numbered.

If you require further detail please contact AFS-620 at the address above.

Federal Aviation Administration

Service Difficulty Report Data

Sorted by aircraft make and model then engine make and model. This report derives from unverified information submitted by the aviation community without FAA review for accuracy.

Control Number / Difficulty Date	Aircraft Make / Aircraft Model	Engine Make / Engine Model	Component Make / Component Model	Part Name / Part Number	Part Condition / Part Location
2008FA0000870				STARTER	MISMANUFACTURED
10/28/2008				774960A4	ENGINE
FOUND BAFFLES INSTALLED INCORRECTLY, INCORRECT HOUSING INSTALLED AND VARIOUS INTERNAL PARTS. (K)					
CA081106001				ELT	INOPERATIVE
11/4/2008				E01	
(CAN) WHILE COMPLETING AN ANNUAL BENCH RECERTIFICATION CHECK ON AN ELT, NO POWER OUTPUT COULD BE MEASURED ON BOTH 121.5 AND 243 MHZ FREQUENCIES. THE UNIT WAS STILL UNDER WARRANTY BY THE MFG AND IT WAS BELIEVED THIS WAS THE FIRST CHECK SINCE BEING PUT INTO SERVICE. THE UNIT WAS RETURNED TO THE MFG FOR REPAIR.					
CA081106002				ELT	MALFUNCTIONED
11/4/2008				E01	
(CAN) DURING THE ANNUAL BENCH RECERTIFICATION INSP OF AN ELT THE VALUE OF MEASURED CURRENT DRAW WAS OBSERVED TO EXCEED THE MFG SPECIFICATION BY 50MA. THE UNIT WAS STILL UNDER THE MFG WARRANTY AND IT WAS BELIEVED THIS INSP WAS THE FIRST CHECK COMPLETED SINCE BEING PUT INTO SERVICE. THE ELT WAS RETURNED TO THE MFG FOR REPAIR.					
CA081113002				WIRE	CHAFED
11/13/2008					MAGNETO
(CAN) COIL TO POINTS WIRE WORN THROUGH TO STRANDS DUE TO RUBBING ON FRAME OF DISTRIBUTOR BLOCK.					
CA081113003				DISTRIBUTOR GEAR	LOOSE
10/22/2008				K3822	MAGNETO
(CAN) DISTRIBUTOR FINGER LOOSE ON GEAR ASSY.					
CA081114006				BEARING	CORRODED
11/13/2008				SB3208A1	ENGINE
(CAN) RECEIVED NEW BEARING FROM WHS 290 WITH CORROSION ON BEARING JOURNAL AND ROLLERS. CURE DATE ON PACKAGE IS 0206, BEARING PN SB3208A-1. BATCH PN 0605118341. HSI HAVE BEEN INFORM OF VARIOUS BEARINGS DELIVERED THAT HAVE SIGNS OF CORROSION ON THEM.					
CA081121010				STATIC LINE	UNBONDED
11/19/2008				20131421B	PITOT/STATIC SY
(CAN) FITTING GLUE AND LINE GOING TO IT IS ALUMINUM WITH A COMPRESSION FITTING WHEN LINE WAS TIGHTEN TO ENSURE NO STATIC LEAK THE GLUE THAT ADHEARS THE FITTING LET GO THIS SUBMITTED ON BEHALF OF SKYLINE MAINT AND AVIONICS AMO 21-80.					
CA081117007		CONT		CYLINDER	CRACKED

11/15/2008	O300C		NR 3

(CAN) NR 3 CYLINDER ASSY WAS FOUND CRACKED BETWEEN THE CYLINDER HEAD AND THE BARREL, APPROX .7500 AROUND THE CICUMFERENCE OF THE ASSY. THIS RESULTED IN LOSS OF COMPRESSION AND ENGINE VIBRATION.

CA081208011	GE	COWLING	DELAMINATED
11/26/2008	CF650C2	9007M60G46	THRUST REVERSER

(CAN) ON DESCENT INTO YYC, WITH POWER LEVERS AT IDLE, THE ACFT SHUDDERED MOMENTARILY. THE NR 2 THRUST REVERSER UNLOCK LIGHT ILLUMINATED AND IN-FLIGHT SHUT DOWN OF NR 2 ENGINE WAS CARRIED OUT. THE ACFT LANDED WITHOUT INCIDENT AND AN INSPECTION WAS CARRIED OUT ON NR 2 ENGINE. NR 2 ENGINE RT TRANSLATING COWL WAS FOUND DELAMINATED WITH A SECTION OF THE COWL MISSING. THE COWL WAS REPLACED, FUNCTION CHECKED AND THE ACFT RETURNED TO SERVICE.

CA081207001	LYC	MAGNETO	FAILED
12/2/2008	O540F1B5	106006169	ENGINE

(CAN) AFTER START MAG CHECK PERFORMED AND LT MAG FAILED. MX WAS NOTIFIED AND WHEN MAG WAS LOOKED AT FOUND THAT THE BREAKER POINT WIRES HAD VIBRATED OFF. WIRES REPAIRED AND REINSTALLED.

CA081125011	PWA	SLEEVE	DAMAGED
11/13/2008	PT6A68		PROP TRANSFER

(CAN) WHILE IN THE VFR PATTERN THE ACFT EXPERIENCED A LOSS OF POWER ACCOMPANIED BY A CHIP LIGHT. THE ENG STABILIZED AT A REDUCED POWER SETTING AND 85 PERCENT NP AND THE CREW MADE AN EMERGENCY LANDING. AN INSP OF THE PROPELLER TRANSFER SLEEVE REVEALED BLUING. THE ENGINE IS TO BE REMOVED AND REPLACED. MFG WILL CONTINUE INVESTIGATING THE EVENT AND ADVISE OF ROOT CAUSE ONCE ESTABLISHED.

CA081105007	PWA	ENGINE	MAKING METAL
10/29/2008	PT6A68		

(CAN) DURING FLIGHT TEST, THE ENG HAD A PARTIAL FEATHERING OF THE PROPELLER LEADING TO A PARTIAL LOST OF THRUST. THE ENGINE "CHIP LIGHT" CAME APPROX 20 SECONDS AFTER LOST OF THRUST. THE PILOT REDUCED POWER TO FLIGHT IDLE AND RETURNED TO BASE. POST FLIGHT INSP REVEALED METALLIC DEBRIS ON THE CHIP DETECTOR AND MAIN OIL FILTER. THE ENGINE WILL BE RETURNED TO MFG FOR INVESTIGATION. UPDATES WILL BE PROVIDED IN DUE COURSE.

CA081125008	PWA	ENGINE	MALFUNCTIONED
11/12/2008	PW127		NR 2

(CAN) DURING CLIMB, THE CREW FELT A SUDDEN YAW AND OBSERVED NR 2 ENGINE TEMP GAGE AT MAX. READING ACCOMPANIED BY AN EEC FAULT. NO UNUSUAL NOISES WERE REPORTED BUT PERSONNEL IN THE REAR OF CABIN REPORTED A SPIKE OF FLAME FROM THE EXHAUST. THE CREW ELECTED TO SHUT THE ENGINE DOWN AND A SINGLE ENGINE LANDING WAS PERFORMED. GROUND INSP FOUND ALL 3 ENGINE ROTORS NOT CAPABLE OF ROTATION. ENGINE WILL BE REMOVED. MFG WILL CONTINUE INVESTIGATING THE EVENT AND ADVISE OF ROOT CAUSE ONCE ESTABLISHED.

CA081112010	PWA	BLEED VALVE	MALFUNCTIONED
11/4/2008	PW305B		ENGINE

(CAN) DURING LANDING, THE ENGINE FLAMED OUT. RE-START ATTEMPT WAS UNSUCCESSFUL. TROUBLESHOOTING LED TO THE REPLACEMENT OF THE COMPRESSOR BLEED VALVE ASSY. MFG WILL CONTINUE INVESTIGATING THE EVENT AND ADVISE OF ROOT CAUSE ONCE ESTABLISHED.

2008FA0000891	AEROSP	TMECA	COUPLING	MISINSTALLED
11/11/2008	AS355N	ARRIUS1A		MAINTRANSMISSION

ENGINE TO MAIN TRANS COUPLINGS FOUND TO BE INCORRECTLY ASSEMBLED. THS WAS FOUND DURING A PRE-FLIGHT INSP. THE COUPLINGS HAVE NOW BEEN ASSEMBLED CORRECTLY. (K)

CA081210009	AEROSP	PWA	ENGINE	ODOR
12/1/2008	ATR42*	PW120		

(CAN) DURING CRUISE, THE PILOTS NOTICED OIL ODOR AND MIST IN THE CABIN. THEY TURNED THE AIR BLEED FROM THE ENGINE OFF AND THE MIST AND ODOR DISAPPEARED. SOON AFTER, OIL PRESSURE FLUCTUATIONS AND THEN A DROP IN PRESSURE OCCURRED. THE PILOTS SHUT DOWN THE ENGINE AND PERFORMED A SINGLE ENGINE LANDING. GROUND INSPECTION FOUND LOW OIL LEVEL, BOROSCOPE INSPECTION OF THE AIR INLET WAS MADE AND REVEALED OIL LEAK FROM C OR D FLANGE AND THE REAR INLET CASE IS FLOODED WITH OIL. THE ENGINE WILL BE REMOVED. MANUFACTURER WILL CONTINUE INVESTIGATING THE EVENT AND ADVISE OF ROOT CAUSE ONCE ESTABLISHED.

CA081027006	AEROSP	PWA	BUTTERFLY VALVE	STICKING
10/23/2008	ATR42300	PW120		CABIN PRESSURE

(CAN) FOLLOWING DEPARTURE, THE ACFT FAILED TO PRESSURIZE IN AUTO OR MANUAL MODE. THE ACFT RETURNED TO POINT OF DEPARTURE AND LANDED WITHOUT FURTHER PROBLEM. THE GROUND AIR CONNECTION CHECK VALVE WAS FOUND TO BE STUCK IN THE OPEN POSITION. MAINT CLEANED AND LUBRICATED THE VALVE TO RESTORE PROPER FUNCTION. THE SYS WAS GROUND CHECKED SERVICEABLE AND THE ACFT RETURNED TO SERVICE WITH NO FURTHER PROBLEM REPORTED.

CA081125009	AEROSP	PWA	GOVERNOR	LEAKING
10/17/2008	ATR42300	PW121		OVERSPEED

(CAN) TEN MINUTES AFTER TAKEOFF, THE CREW GOT A RT ENG LOW OIL PRESSURE WARNING. THE PROPELLER DID NOT AUTO FEATHER AND THE CREW ATTEMPTED TO FEATHER THE PROPELLER MANUALLY WITHOUT SUCCESS. THE ENGINE REMAINED FUNCTIONING FOR FIVE MINUTES BEFORE THE CREW ELECTED TO SHUT IT DOWN. THE PROP HOWEVER DID NOT FEATHER AND THE ACFT FLEW FOR 60 MINUTES WITH THE ENGINE SHUTDOWN BUT PROP WINDMILLING AT AROUND 70 PERCENT NP. A SINGLE ENGINE LANDING FOLLOWED. GROUND INSP FOUND AN OIL LEAK AT THE OVERSPEED GOVERNOR HYD PUMP MOUNTING PAD. CHIP DETECTOR CONTAMINATION AND SEIZED LP IMPELLER WAS ALSO OBSERVED. ENGINE WAS REMOVED AND FWD FOR REPAIRS. MFG WILL CONTINUE INVESTIGATING THE EVENT AND ADVISE OF ROOT CAUSE ONCE ESTABLISHED.

CA081125013	AEROSP	PWA	EEC	FAILED
11/15/2008	ATR72	PW127		LT ENGINE

(CAN) DURING CLIMB PASSING FL110, A SEVERE YAW TO THE LT WAS FELT AND THE CREW NOTED THAT THE LT ENG INDICATED 0 TORQUE (ENGINE STILL RUNNING). ATTEMPTS TO REGAIN ENG PWR WERE UNSUCCESSFUL AND THEY ELECTED TO RETURN TO THE POINT OF DEPARTURE. SHORTLY AFTER, VIBRATIONS WERE FELT AND THE CREW SHUT THE ENGINE DOWN. A SINGLE ENGINE LANDING FOLLOWED. TROUBLESHOOTING LED TO THE REPLACEMENT OF THE ENGINE ELECTRONIC CONTROL BEFORE THE ACFT WAS RETURNED TO SERVICE.

CA080926005	AIRBUS	GE	CONNECTOR	DAMAGED
9/25/2008	A310	CF680	E0111241057	GALLEY POWER

(CAN) DURING STATION TRANSIT, CABIN CREW REPORTED SMOKE COMING FROM AFT GALLEY, WITH SMOKE WARNING, WHEN GALLEY ELECTRICAL PWR WAS PUT ON. GALLEY POWER WAS REMOVED FROM THE AFT GALLEY. DURING MX INVESTIGATION, THE GALLEY CONNECTOR 38 MC WAS FOUND DAMAGED WITH PINS AND SOCKET BURNED. CONNECTOR WAS REPLACED AND CAMPAIGN WAS INITIATED TO INSPECT ACFT EQUIPMENT WITH THE SAME TYPE OF INSTALLATION.

CA081118003	AIRTRC	PWA	AIRTRC	LOCK TAB	CRACKED
11/3/2008	AT502B	PT6A34		701981	POWER LEVER

(CAN) FCU FUEL CONDITION LEVER LOCK SPRING TAB THAT IS USED TO PREVENT THE LEVER MOVING TO FUEL CUT-OFF HAS FAILED.

CA081118010	AIRTRC	PWA	MOUNT	CRACKED
11/18/2008	AT602	PT6A65AG	5082119	ENGINE

(CAN) DURING THE 300HR/ANNUAL INSP, ENGINE MOUNT WAS BEING INSPECTED IAW AD2008-10-12 AND AIR TRACTOR`S SL NR 253C, A CRACK WAS FOUND ON THE LT LOWER ENGINE ATTACH POINT VIA 10X MAGNIFYING

GLASS. ACFT HAS BEEN NOTIFIED ABOUT THE CRACK AND A NEW ENGINE MOUNT HAS BEEN SINCE INSTALLED WITH THE GUSSET UPGRADE IAW AD2008-10-12 AND SL NR 253C WHICH WAS SUPPLIED BY THE MFG.

CA081031004	AIRTRC	PWA	ROLL PIN	MISSING
10/31/2008	AT802A	PT6A67A		AILERON PUSHROD

(CAN) LT WING AILERON PUSHROD ASSY FOUND TO BE MISSING ONE ROLL PIN THAT RETAINS THE INBD END ROD END BEARING. THIS IS A DEFECT FROM THE FACTORY (INSIDE OF HOLE IS PAINTED). ALL OTHER ROD ENDS INSPECTED NO OTHER DEFECTS FOUND, ARROW SHOWS MISSING PIN HOLE.

CA081105008	AMD	PWC	CARBON SEAL	CRACKED
10/31/2008	FALCON2000	PW308C		ENGINE

(CAN) DURING TAKEOFF ROLL, AT 90 KNOTS, THE OIL PRESSURE DROPPED TO ZERO AND THE LOW OIL PRESSURE WARNING ANNUNCIATED. THE CREW RETARDED THE POWER TO IDLE, ABORTED THE T/O AND RETURNED TO THE RAMP. TROUBLESHOOTING FOUND AN OIL LEAK FROM A CRACKED CARBON SEAL ON THE FRONT HYD PUMP DRIVE PAD. THE ACFT WAS RETURNED TO SERVICE FOLLOWING ITS REPLACEMENT.

CA081204008	BBAVIA	LYC	HINGE PIN	RUSTED
11/27/2008	8GCBC	O360C2A	4744	PAX DOOR

(CAN) AN ATTEMPT TO REMOVE THE ENTRANCE DOOR USING THE EMERGENCY EXIT HANDLE FOUND THAT THE SYS HAD BECOME SEIZED. UPON CLOSER INSP, IT WAS FOUND THAT THE HINGE PIN (DISPITE PERIODIC LUBING) HAD BECOME RUSTED TO THE AIRFRAME PIN TABS. THE DOOR CONTINUED TO OPEN AND CLOSE PROPER USING THE NORMAL SYS. THE ONLY SYS THAT FAILED IS THE JETTISON PORTION OF THE SYS. THE MM DOES NOT CALL FOR LUBBING OR FUNCTION CHECKING THIS SYS. IT HAS BEEN APPROXIMATELY 2000 HRS SINCE THE LAST RECORDED REMOVAL OF THE DOOR.

CA081120002	BEECH	PWA	MONITOR	FAULTY
11/18/2008	100BEECH	PT6A28		FUEL QTY

(CAN) PILOT REPORT ERRATIC ON FUEL QTY INDICATION. TROUBLESHOOTING REVEALED FAULTY CONTROL MONITOR. MONITOR REPLACED BY REPAIRED UNIT THAT FAILED 2 DAYS LATER, REPLACED WITH OTHER ONE FROM SAME VENDOR THAT DOESN`T WORK, SWAPPED WITH AN SERVICEABLE UNIT FROM AN OTHER ACFT (FLTS) TO CONFIRMED TROUBLESHOOTING. IT TAKES 3 DIFFERENT UNIT TO FINALLY FIXED THE PROBLEM.

CA081112009	BEECH	PWA	ENGINE	FAILED
10/31/2008	1900C	PT6A65B		NR 2

(CAN) DURING CRUISE AT FL180, THE CREW FELT A STRONG JOLT AND VIBRATIONS THROUGH THE AIRFRAME. A QUICK REVIEW OF THE GAGES SHOWED A POWER LOSS ON NR 2 ENG. THE ENG WAS SECURED AND THE CREW PERFORMED A SINGLE ENGINE LANDING. GROUND INSP FOUND NOTHING OF SIGNIFICANCE AND THE ACFT WAS FERRIED BACK TO BASE. DURING FINAL APPROACH OF THE FERRY FLIGHT, THE ENGINE LOST TORQUE BUT RECOVERED WITHOUT ANY PILOT INPUTS. THE ACFT LANDED SAFELY AT DESTINATION. MFG WILL CONTINUE INVESTIGATING THE EVENT AND ADVISE OF ROOT CAUSE ONCE ESTABLISHED.

CA080826001	BEECH	PWA	LIGHT	INOPERATIVE
8/12/2008	1900C	PT6A65B	3086070843004	MLG INDICATOR

(CAN) LANDING GEAR MOTOR CONTROL CIRCUIT BREAKER FOUND POPPED WHEN THE GEAR WAS SELECTED DOWN FOR LANDING. GEAR WAS LOWERED BY EMERGENCY EXTENSION INDICATING (3) GREEN BUT THE IN TRANSIT LIGHT WAS STILL ON. ACFT EXPERIENCED A NOSE GEAR COLLAPSE ON LANDING. UPON FURTHER INVESTIGATION IT WAS DISCOVERED THAT THERE WERE NO DIVIDERS IN THE HEAD OF THE GEAR DOWN LIGHT BLOCK. THIS ALLOWED LIGHT FROM THE MAIN GEAR DOWN AND LOCK LIGHT TO ILLUMINATE THE NOSE INDICATOR. IT GAVE A FALSE INDICATION THAT ALL 3 GEAR WERE IN THE DOWN AND LOCK POSITION. A NEW INDICATOR WAS INSTALLED SHOWING A POSITIVE INDICATION OF THE NOSE NOT LOCKED.

CA080930009	BEECH	PWA	LINE	RUPTURED
9/20/2008	1900C	PT6A65B	1013880175	HYDRAULIC SYS

(CAN) AFTER LANDING A HYDR LEAK WAS DISCOVERED BY THE MX CREW. IT TURNED OUT TO BE THE RT MLG

"REGULAR EXTEND" HYDR LINE. THE LINE HAD RUPTURED ABOUT 1 INCH FROM THE END FITTING RESULTING IN A SUBSTANTIAL FLUID LOSS. THE LINE WAS REPLACED WITH NO FURTHER ISSUES.

CA081112008	BEECH	PWA	BEECH	BOLT	BROKEN
11/12/2008	1900D	PT6A67D		130909B19	SUPPORT

(CAN) SUPPORT ASSY BRACKET ON BOTH SIDES OF THE NLG ACTUATOR PIVOT HAD 5 OF THE 6 BOLT HEADS SHEARED OFF LEAVING THE BOLT SHANK AND CAPTURE NUT.

CA081022010	BEECH	PWA	BEECH	DRIVE ASSY	SHEARED
10/2/2008	1900D	PT6A67D		503801537	FLAP ACTUATOR

(CAN) ON APPROACH THE FLAPS WERE SELECTED TO 17 DEG BUT FAILED TO EXTEND PAST 10 DEG. THE FLIGHT CREW INITIATED AN OVERSHOOT TO TROUBLESHOOT THE PROBLEM, THEY WERE UNABLE TO FIX THE BROKEN FLAPS AND RETURNED TO BASE. MX REPLACED THE FLAP DRIVE AND NO FURTHER FAULTS WITH SYS FOUND.

2008FA0000862	BEECH	PWA	BRACKET	CRACKED
11/14/2008	200BEECH	PT6*	10112002584	RT MLG SUPPORT

A 1.4 INCH LONG CRACK WAS FOUND IN THE RT MLG DRAG BRACE SUPPORT BRACKET DURING INSPECTION. DURING THE REMOVAL OF THE PART (2) ADDITIONAL CRACKS 1.4 INCH LONG WERE FOUND AROUND 4 FASTENERS WHERE THE BRACKET ATTACHES TO THE MAIN SPAR WEB. WHEN INSTALLED, THE AREA AROUND THESE 4 FASTENERS IS OBSCURED BY THE MLG DRAG BRACE FWD ATTACH FITTING (PN 50-120201-5). THE PART WAS REPLACED WITH A NEW BRACKET. NO CRACKS WERE FOUND N THE SPAR WEB. SUSPECT CRACKS CAUSED BY FATIGUE AND OR HARD LANDINGS. (K)

CA081117005	BEECH	PWA	CIRCUIT BOARD	INTERMITTENT
11/13/2008	200BEECH	PT642A	103791101	AUTOPILOT

(CAN) ACFT IN NORMAL CLIMB CONFIGURATION WITH FCS DISPLAYING CLIMB (GREEN) AND ALT ARM (WHITE.) THE VERTICAL MODE DISPLAY MAY THEN CHANGE TO ALT (GREEN) EVEN THOUGH THE TARGET ALTITUDE IS SEVERAL THOUSAND FT ABOVE (E.G. WITH THE ALT SELECT SET FOR 20,000 FEET, THRU, SAY, 12,000 FT THE VERTICAL MODE WILL CHANGE FROM CLIMB TO ALT) WITH THE VERTICAL MODE IN ALT AND STILL SEVERAL THOUSAND FT BELOW SELECTED ALTITUDE THE ACFT WILL BEGINNING PITCHING UP SEVERAL DEGRESS (+10 DEGREES OR HIGHER) REQUIRING AUTOPILOT DISCONNECT, RESET AND MONITORING BY THE PILOT. ALTITUDE ALERTER REMOVED FOR INSP. INTERNAL PRINTED CIRCUIT BOARD IDENTIFIED AS THE PROBLEM SOURCE AND SUBSEQUENTLY REPLACED.

CA081118008	BEECH	PWA	PANEL	SMOKE
11/15/2008	200BEECH	PT6A41	1015245001	COCKPIT

(CAN) ACFT RETURNED SHORTLY AFTER DEPARTURE DUE TO AN ELECTRICAL ODOR AND A WISP OF SMOKE AT THE CO-PILOTS CONTROL WHEEL. IT LASTED FOR A FEW SECONDS AND THEN DISAPPEARED. MX INSPECTED THE ACFT UPON ARRIVAL AND FOUND THAT THE EDGE-LIGHTED PANEL AT THE CO-PILOTS CLOCK WAS AT FAULT. THE LIGHTING WAS DISABLED AND DEFERRED IAW THE MEL UNTIL REPLACEMENT PARTS ARRIVE. THE AREA WAS INSPECTED AND ADJACENT SYS TESTED WITH NO ADDITIONAL FAULTS NOTED AND THE ACFT RELEASED.

CA081027005	BEECH	PWA		FORK	BROKEN
10/22/2008	200BEECH	PT6A41	ADI7999003	ADI79990038	ACTUATOR

(CAN) AFTER TAKEOFF THE PILOT SELECTED GEAR UP, RT MLG FAILED TO RETRACT. GEAR WAS CYCLED WITH NO SUCCESS. GEAR WAS RETURNED TO DOWN POSITION AND THERE WERE 3 GREEN LIGHTS. DISPATCH AND MX WERE CONTACTED AND IT WAS DECIDED TO RETURN TO BASE. LANDING WAS UNEVENTFUL. UPON INSP BY MX, THE RT MLG ACTUATOR FORK END THAT ATTACHES TO THE UPPER DRAG BRACE WAS SHEARED OFF, HOWEVER THE DOWNLOCK WAS STILL IN PLACE. IT LOOKED LIKE THE FORK END HAD DEVELOPED A FATIGUE CRACK AND FINALLY LET GO JUST ABOVE THE LOCK NUT THAT HOLDS THE FORK END IN PLACE ON THE ACTUATOR. THE FORK END, AND TAB WASHER WERE REPLACED WITH NEW PARTS. CYCLES OR HRS ON BROKEN FORK END IS UNKNOWN. THE GEAR WAS INSPECTED FURTHER AND NO OTHER DEFECTS FOUND. GEAR SWINGS WERE COMPLETED AND ALL CHECKED SERVICEABLE. THE ACFT IS EQUIPPED WITH THE STC NR SA4378WP, HYD LANDING GEAR RETRACTION SYS, WHICH THE FORK END IS A PART OF THE STC.

CA081125010	BEECH	PWA		OIL SYSTEM	LEAKING
11/13/2008	300BEECH	PT6A60A			ENGINE

(CAN) DURING CRUISE AT FL270, THE PILOT NOTICED OIL ODOR AND SMOKE IN CABIN. HE ELECTED TO SHUTDOWN THE ENG AND SHORTLY AFTER, PERFORMED A UNEVENTFUL SINGLE ENGINE LANDING. POST FLIGHT INSP AND GROUND RUNS REVEALED OIL COMING OUT OF THE INLET AND COMPRESSOR BLEED VALVE. WILL CONTINUE INVESTIGATING THE EVENT AND ADVISE OF ROOT CAUSE ONCE ESTABLISHED.

CA081118001	BEECH	PWA	BEECH	RELAY	UNSERVICEABLE
11/15/2008	300BEECH	PT6A60A		MS24166DI	WINDSHIELD HEAT

(CAN) CREW DEFECT PILOT WINDSHIELD HEAT NOT WORKING, TROUBLESHOOT TO LOW HEAT RELAY, TERMINAL A2 MELTED OFF THE RELAY ASSY, DAMAGING WIRES ATTACHED TO THE TERMINAL APPROX 3 INCHES BACK THE WIRE COVER MELTED OFF. RELAY WAS REPLACED AND SYS OPERATES PROPERLY.

2008FA0000847	BEECH	CONT	SPRING	BROKEN
11/25/2008	95B55	IO470L	S539800M015	STARTER ADAPTER

STARTER ADAPTER P/N 635050-A4, STARTER SPRING FAILED. STARTER ADAPTER OVERHAULED, RETURNED TO SERVICE AFTER OVERHAUL. PART SOLD, STARTER ADAPTER INSPECTED AND RETAGGED AND SOLD TO MFG. MAINT INSTALLED STARTER ADAPTER AND SPRING FAILED 14 HOURS LATER.

CA081110002	BEECH	PWA	SWITCH	INTERMITTENT
11/5/2008	A100	PT6A28	1003810061	NLG

(CAN) AFTER PILOT SELECTED GEAR DOWN, THERE WAS NO INDICATION THE NOSE GEAR WAS DOWN AND LOCKED, ACFT DIVERTED BACK TO MX BASE. ON ROUTE NOSE GEAR INDICATION CAME ON. ACFT LANDED WITHOUT INCIDENT. MX REPLACED NOSE GEAR DOWN LOCK INDICATOR SWITCH AND RETURNED TO SERVICE.

CA081027003	BEECH	PWA	SHAFT	STIFF
10/25/2008	A100	PT6A28		FCU THROTTLE

(CAN) UPON APPROACH, THE LT ENG PWR LEVER WAS RETARDED WITH NO EFFECT ON ENG. THE ENG REMAINED AT 91 PERCENT NG. THE APPROACH WAS ABORTED AND THE ACFT DIVERTED. ON ARRIVAL, AN EMERGENCY WAS DECLARED AND THE LT WAS SHUTDOWN IN ORDER TO CARRY OUT THE LANDING. MX INVESTIGATION DETERMINED THE INPUT SHAFT ON THE FCU WAS VERY STIFF, THE FCU WAS REPLACED AND THE ACFT RETURNED TO SERVICE.

2008FA0000888	BEECH	SWITCH	BENT
12/15/2008	C90	DT2RA7	TE FLAPS

THE UP TRAVEL SWITCH ON THE RT FLAP FAILED TO TRIP UPON FLAP RETRACTION. THIS CAUSED THE FLAP MOTOR TO CONTINUE TO RUN ALTHOUGH THE FLAP WAS ALREADY FULLY RETRACTED. THE MOTOR OVERHEATED AND STARTED GENERATING SMOKE. THE ACFT WAS ON THE GROUND, TAXIING FOR TAKEOFF WHEN THIS WAS DISCOVERED. THE ACFT RETURNED TO THE RAMP. UPON INSPECTION BY MX STAFF IT WAS DISCOVERED THAT THE ARM ON THE FLAP UP TRAVEL SWITCH WAS BENT (CAUSE UNKNOWN.) THIS PREVENTED THE SWITCH FROM CLOSING. A CAREFUL EXAMINATION OF THE AREA COULD NOT REVEAL WHAT CAUSED THE ARM TO BEND. SPECULATION IS THAT PERHAPS IT WAS RELATED TO ICE OR FOD DEBRIS.

2008FA0000856	BEECH	RELAY	INTERMITTENT
11/24/2008	F33A	SM50D7	LANDING GEAR

PILOT REPORTED AFTER PUTTING THE GEAR SELECTOR IN THE UP POSITION. THE GEAR FAILED TO RETRACT, 3-4 MINUTES LATER THE PILOT REPORTED THE GEAR CAME UP ON ITS OWN. PILOT THEN PUT THE GEAR IN THE DOWN POSITION AND RETURNED TO BASE. PROBABLE CAUSE AT THIS TIME UNKNOWN. INSTALLED NEW AND IMPROVED RELAY IAW DATE CODE. (K)

2008FA0000865	BEECH	ROD	BENT
9/20/2008	F33A	368200119	NOSE GEAR

ON LANDING, PILOT OBSERVED THREE GREEN LIGHTS. ON TOUCHDOWN AND ROLL OUT NOSE GEAR COLLAPSED

INTO NOSE GEAR WHEEL WELL. UPON INVESTIGATION GEAR TRANSMISSION WAS DOWN AND LOCKED. NOSE GEAR ROD END BENT FWD SIDE OF AFT RETRACT ROD. NOSE GEAR ROD END CAN BE ACCESSED IN WHEEL WELL AFT RT SIDE ATTACHED TO KEEL UNDER SHIELD. THIS IS A GOOD PLACE TO LOOK AT HARD LANDINGS AND DURING ANNUAL INSPECTIONS. PILOT INTERVIEWED AND SAID HE DID NOT HAVE HARD LANDING OR PORPOISE ACFT. PN OF ROD IS 36-820011-9, PN FOR ROD END IS ANDE5-323. (K)

2008FA0000871	BEECH	PWA	SPAR	CRACKED
11/1/2008	H18	R985*		UNKNOWN

HAVE JUST HAD THE SPAR X-RAY ACCOMPLISHED IAW AD75-27-09 R2. UPON REVIEW OF THE X-RAYS IT WAS DETERMINED THAT THERE WAS A CRACK. IT SEEMS THIS CRACK OF A VERY SIMILAR ONE WAS PREVIOUSLY REPAIRED AND THAT REPAIR IS IN QUESTION AS WELL. (K)

CA081023005	BELL	LYC	FITTING	CRACKED
7/27/2008	205A1	T5317A	205032807003	TAILBOOM

(CAN) WHILE CONDUCTING 100 HR INSP NOTED AREA IN LT LOWER TAIL BOOM LONGERON AT FWD FITTING TO BE CRACKED. NDT CONFIRMED A CRACK INDCATION OF 1.5 INCHES LONG IN THE FITTING.

CA081113008	BELL		TAB	DEFORMED
10/16/2008	206B		206010200133	ROTOR BLADE

(CAN) LOUD BANG WAS NOTED WITHING 10 MINUTES OF FLIGHT. LEVEL OF VIBRATION DID NOT INCREASE. INSP AFTER LANDING FOUND THAT THE TRIM TAB WAS DEFORMED (UPPER SIDE WAS BENT UPWARD AND LOWER SIDE BENT DOWNWARD). PEEL-PLY HAS BEEN LEFT ON THE TRIM TAB.

CA081209006	BELL	ALLSN	DRIVE SHAFT	FAILED
6/11/2008	206B	250C20	206040015103	M/R DRIVE

(CAN) ON DESCENT PILOT SMELLED BURNING GREASE. AFTER LANDING AND POST FLIGHT INSPECTION FOUND GREASE THROWN FROM DRIVESHAFT COUPLING. DRIVESHAFT WAS REPLACED AND FOUND ISOLATION MOUNT TO BE WEAK. REPLACED ISOLATION MOUNT AND PROBLEM WENT AWAY.

CA081125005	BELL	ALLSN	WASHER	CRACKED
11/24/2008	206B	250C20B	1400191	PITCH CHANGE

(CAN) THE VERTICAL FIN WAS REMOVED TO FACILITATE SEAL REPLACEMENT OF THE PITCH CHANGE MECHANISM. THE RADIUS WASHERS THAT ARE USED ON THE VERTICAL FIN ATTACHMENT WERE INSPECTED, AND IT WAS NOTED THAT 3 OF THE 4 WASHERS HAD CRACKS ON THE OUTSIDE PERIMETER OF THE WASHER. THE WASHERS P/N 140-019-1 WERE REPLACED AND THE FIN RE-INSTALLED. IT IS NOT KNOWN IF THIS CONDITION IS DUE TO OVERTIGHTENING OF THE FASTENER, OR THE INCREASE IN TORQUE VALUE FOLLOWING ISSUANCE OF ASB 206-06-107.

CA081107007	BELL	ALLSN	DRIVE SHAFT	FAILED
10/30/2008	206B1	250C20B	23076061	TURBINE GOVERNOR

(CAN) DURING REMOVAL OF THE GOVERNOR FOR SCHEDULED OVERHAUL, AT REMOVAL FROM ENGINE GEARBOX, THE CLIP THAT RETAINS THE DRIVEGEAR ON THE PT SHAFT WAS NOT LOCATED IN THE GROOVE ON THE SHAFT, AND THE WASHERS THAT ARE RETAINED BY THE CLIP AND SET AGAINST THE DRIVE GEAR, WERE FOUND SITTING IN THE MALE SPLINE OF THE GEARBOX DRIVE. IT APPEARS AS THOUGH THE END OF THE DRIVESHAFT WAS WORN DOWN TO ALLOW THE CIRCLIP TO BECOME DISLODGED FROM THE GROOVE AND WORK IT`S WAY OFF THE SHAFT, HOWEVER THE DAMAGE TO THE SHAFT COULD HAVE BEEN DUE TO THE DISLODGED WASHERS SITTING IN THE DRIVE SPLINE. THE ONLY ITEM FOUND RETAINING THE DRIVEGEAR WAS THE SPRING ON THE BACK SIDE OF IT. THE ENGINEER INSPECTED THE GEARBOX DRIVE BUT WAS UNABLE TO LOCATE THE CLIP. NO PREVIOUS HISTORY OF FAULTY GOVERNOR OPERATION OR ABNORMAL SOUNDS WERE NOTED. CHIP PLUGS WERE INSPECTED - NOTHING FOUND. GEARBOX DRIVE GEARS INSPECTED FOR DAMAGE, NONE FOUND. O/H UNIT INSTALLED AND GROUND RUN - SATISFACTORY.

2008FA0000842	BELL		GROUND WIRE	MISSING
11/24/2008	206B3			BOOST PUMP

MFG HAS REMOVED A GROUND WIRE FROM BOTH ELECTRIC BOOST PUMPS. GROUND HAS BEEN ON EARLIER MODELS, REMOVED SINCE SN: 4205 IAW WIRING DIAGRAMS. CAUTION LIGHTS FOR BOOST PUMPS NOT OPERATIONAL SINCE NO GROUND AVAILABLE TO BASE OF PRESSURE SWITCH. GROUND WIRE INSTALLED FROM MOTOR HOUSING TO BASE OF BOOST PUMP. MM SHOWS GROUND WIRE TO BASE OF BOOST PUMP 206-062-681-101. OPS NORMAL AFTER GROUND ROUTED TO BASE OF BOOST PUMP.

2008FA0000844	BELL		GROUND WIRE	MISSING
11/24/2008	206B3			BOOST PUMP

MFG HAS REMOVED A GROUND WIRE FROM BOTH ELECTRIC BOOST PUMPS. GROUND HAS BEEN ON EARLIER MODELS, REMOVED SINCE SN: 4205 IAW WIRING DIAGRAMS. CAUTION LIGHTS FOR BOOST PUMPS NOT OPERATIONAL SINCE NO GROUND AVAILABLE TO BASE OF PRESSURE SWITCH. GROUND WIRE INSTALLED FROM MOTOR HOUSING TO BASE OF BOOST PUMP. MM SHOWS GROUND WIRE TO BASE OF BOOST PUMP 206-062-681-101. OPERATION NORMAL AFTER GROUND ROUTED TO BASE OF BOOST PUMP.

2008FA0000845	BELL		GROUND WIRE	MISSING
11/24/2008	206B3			BOOST PUMP

MFG HAS REMOVED A GROUND WIRE FROM BOTH ELECTRIC BOOST PUMPS. GROUND HAS BEEN ON EARLIER MODELS, REMOVED SINCE SN: 4205 IAW WIRING DIAGRAMS. CAUTION LIGHTS FOR BOOST PUMPS NOT OPERATIONAL SINCE NO GROUND AVAILABLE TO BASE OF PRESSURE SWITCH. GROUND WIRE INSTALLED FROM MOTOR HOUSING TO BASE OF BOOST PUMP. MM SHOWS GROUND WIRE TO BASE OF BOOST PUMP 206-062-681-101. OPERATION NORMAL AFTER GROUND ROUTED TO BASE OF BOOST PUMP.

2008FA0000846	BELL	ALLSN	GROUND WIRE	MISSING
11/24/2008	206B3	250C20J		BOOST PUMP

MFG HAS REMOVED A GROUND WIRE FROM BOTH ELECTRIC BOOST PUMPS. GROUND HAS BEEN ON EARLIER MODELS, REMOVED SINCE SN: 4205 IAW WIRING DIAGRAMS. CAUTION LIGHTS FOR BOOST PUMPS NOT OPERATIONAL SINCE NO GROUND AVAILABLE TO BASE OF PRESSURE SWITCH. GROUND WIRE INSTALLED FROM MOTOR HOUSING TO BASE OF BOOST PUMP. MM SHOWS GROUND WIRE TO BASE OF BOOST PUMP 206-062-681-101. OPS NORMAL AFTER GROUND ROUTED TO BASE OF BOOST PUMP.

CA081001007	BELL	ALLSN	CHECK VALVE	DIRTY
10/1/2008	206L1	250C28B	ZT2CV06A08B	FUEL SYSTEM

(CAN) AFTER A FUEL FILTER REPLACEMENT A 2 MINUTE RUN IS REQUIRED WITH BOOST PUMPS OFF TO ENSURE THERE ARE NO AIR LEAKS IN THE FUEL SYS. DURING THIS 2 MINUTE GROUND RUN THE ENG FLAMED OUT AFTER APP 90 SECONDS INDICATING AN AIR LEAK. FUEL SYS INSPECTED AND THE INLINE FUEL/CHECK VALVE WAS FOUND STUCK IN THE OPEN POSITION. WHEN THIS VALVE IS STUCK OPEN AIR CAN BE SUCKED FROM THE FRONT FUEL TANKS IF THEY ARE EMPTY. CHECK VALVES CLEANED AND HELICOPTER WAS GROUND RUN SATISFACTORILY. THIS WAS POSSIBLY CAUSED BY FUELING FROM DRUMS FOR AN EXTENDED PERIOD OF TIME AND A SMALL QUANTITY OF DIRT ENTERED THE FUEL SYS.

2008FA0000858	BELL	ALLSN	EXCITER	INTERMITTENT
11/18/2008	206L3	250C30P	106149504	POWERPLANT

ENGINE HAD AN INTERMITTENT DELAYED LIGHTOFF CAUSING HOT STARTS. REPLACING THE IGNITION EXCITER CORRECTED THE PROBLEM. THE DEFECTIVE EXCITER WAS FOUND TO HAVE A LOOSE STUD WHERE THE INPUT VOLTAGE IS APPLIED. SUSPECT THIS WAS CAUSING A LOW OUTPUT VOLTAGE. IT APPEARS THE NUT ON THE STUD WAS OVERTORQUED DURING INSTALLATION, CAUSING THE STUD TO LOOSEN. (K)

CA081001004	BELL	ALLSN	FITTING	CRACKED
9/27/2008	206L3	250C30P	206031329103S	TAILBOOM

(CAN) UPPER LT TAILBOOM ATTACHMENT FITTING ON THE FUSELAGE SIDE FOUND CRACKED FROM THE RIVET HOLES.

CA081031001	BELL	ALLSN	COUPLING	CRACKED
10/31/2008	206L3	250C30P	327211	T/R DRIVE SHAFT

(CAN) DURING A SHEDULED 100/300 HR INSP OF THE FWD T/R DRIVESHAFT SEGMENT THOMAS COUPLINGS, THE FWD THOMAS COUPLING WAS FOUND CRACKED. UPON FURTHER DISSASSEMBLY ONLY ONE OF THE LAMIATES WAS FOUND CRACKED. THE COUPLING WAS REMOVED FROM SERVICE AND REPLACED NEW. THE AFT COUPLING WAS ALSO INSPECTED FUTHER WITH NO DAMAGE NOTED.

CA080618002	BELL	PWA	SEAT FRAME	INTERFERENCE
6/16/2008	212	PT6T3	AAL292030001	COCKPIT SEAT

(CAN) DURING THE INSTALLATION OF VERTICAL REFERENCE SEAT KIT, IAW STC SH06-31, IT WAS DISCOVERED THAT THE CYCLIC FLIGHT CONTROL STICK IS INTERFERED WITH DUE TO THE SEAT NOW BEING POSITIONED FURTHER FWD AND ELEVATED BECAUSE OF THE KIT INSTALLATION. AN ELEVATION OF THE INSTALLATION IS ATTACHED TO PROVIDE DETAILS OF THIS ISSUE. THE CYCLIC CONTROL STICK CONTACTS THE SEAT FRAME WHEN THE SEAT IS TILTED. THE CYCLIC CONTROL STICK IS NOT ABLE TO CONTACT THE CONTROL STOP WHEN THE SEAT IS IN THE TILTED POSITION.

CA080930003	BELL	PWA	SEAL	LEAKING
8/31/2008	212	PT6T3B		ENGINE OIL

(CAN) DURING CRUISE, THE OIL PRESSURE STARTED TO FLUCTUATE FOLLOWED BY A DROP TO ZERO, WHICH WAS ACCOMPANIED BY A GEARBOX CHIP DETECTOR WARNING FOR NR 2 POWER SECTION. A SINGLE ENGINE LANDING WAS PERFORMED. TROUBLESHOOTING FOUND LITTLE OIL LEFT IN THE ENGINE AND A LEAK AT NR 2 PT GOVERNOR SEAL. THE CHIP DETECTOR WAS FOUND CONTAMINATED. THE POWER SECTION AND GEARBOX TC2523 WILL BE REMOVED AND FORWARDED FOR REPAIRS. MFG WILL CONTINUE INVESTIGATING THE EVENT AND ADVISE OF ROOT CAUSE ONCE ESTABLISHED.

CA080404003	BELL	LYC	BELL	LINER	SHEARED
8/7/2007	214B1	T5508D		2140402141	RGB BEARING

(CAN) DURING THE COURSE OF A 100 HR INSP, AME FOUND A LARGE AMOUNT OF NON-FERROUS METAL PARTICLES IN THE REDUCTION GEARBOX OIL FILTER AND THE OIL DRAINED FROM THE GEARBOX. CHIP PLUG WAS INSPECTED AND FOUND CLEAN. REDUCTION GEARBOX WAS REMOVED AND REPLACED WITH A SERVICEABLE GEARBOX. LATER TEARDOWN OF THE GEARBOX FOUND THE INPUT BEARING LINER P/N 214-040-214-1 HAD SHEARED ITS 3 RETAINING PINS AND SPUN WITHIN THE MAGNESIUM CASE P/N 214-040-211-005.

CA081113007	BELL		BUSHING	DEFORMED
11/4/2008	407		407012108101	PITCH HORN ASSY

(CAN) WASHER BETWEEN THE T/R PITCH HORN AND PITCH LINK FOUND DEFORMED.

CA081028003	BELL	ALLSN	BELL	BEVEL GEAR	DAMAGED
10/24/2008	407	250C47B		407040035101	TRANSMISSION

(CAN) TRANSMISSION CHIP LIGHT ILLUMINATED. MECHANIC FOUND SMALL DEBRIS ON THE LWR CHIP PLUG. UPON INSP BY THE OVERAUL SHOP, THEY DISCOVERED THE BEVEL GEAR DAMAGED. A SMALL PIECE OF GEAR TOOTH APPROX. .360X.073 HAD BROKEN OFF THE GEAR ASSY AND DISCOVERED THE BEVEL GEAR CRACKED AT THE DAMAGED GEAR TOOTH ARED.

2008FA0000855	BELL	SPUR GEAR	SHEARED
12/1/2008	OH58A	23038229	GEARBOX

GAS PRODUCER TRAIN IDLER SPUR GEARSHAFT PN: 23038229. SHEARED IN HALF, PRODUCING METAL IN OIL. WHEN TECHNICIAN DISASSEMBLED GEARBOX FOUND THAT GEARSHAFT WAS THE SOURCE OF THE METAL

2008FA0000854	BELL	ALLSN	SPUR GEAR	BROKEN
12/1/2008	OH58A	250C20C	23038229	ENGINE

GAS PRODUCER TRAIN IDLER SPUR GEARSHAFT PN: 23038229. SHEARED IN HALF, PRODUCING METAL IN OIL. WHEN TECHNICIAN DISASSEMBLED GEARBOX FOUND THAT GEARSHAFT WAS THE SOURCE OF THE METAL

CA081210008	BOEING	RROYCE	TURBINE BLADES	FAILED
12/4/2008	717200	BR700715A130	FW45914	ENGINE

(CAN) SURGE/IFSD/ENGINE SHUTDOWN IN FLIGHT WITH TGT CLIMBING THROUGH 1100 C. BOROSCOPE OF ENGINE 13299 TODAY FOUND THAT 2 OFF HPT STAGE 1 BLADES SUFFERED FROM A BELOW-PLATFORM FAILURE. THE 2 FAILED BLADES ARE SEPARATED BY 28 BLADES. THE AIRFOILS ON ALL OF THE REMAINING BLADES HAVE BEEN KNOCKED OFF ABOVE THE PLATFORM.

CA081205006	BOEING	PWA	BFGOODRICH	STATOR	BROKEN
12/2/2008	727223	JT8D15		244300	BRAKE ASSY

(CAN) DURING PUSHBACK ON C-FCJF EXCESSIVE FORCE WAS REQUIRED TO MOVE ACFT AND DETERMINED NR2 MAIN WHEEL WAS DEFLATED. ACFT PULLED BACK TO GATE FOR INVESTIGATION. MAINT WAS UNABLE TO REMOVE NR2 WHEEL. AFTER SEVERAL EFFORTS WITHOUT SUCCESS IT WAS DECIDED THE TIRE AND POSSIBLY THE WHEEL WOULD HAVE TO BE CUTOFF. AFTER CUTTING A SECTION OF THE TIRE OFF IT WAS DETERMINED A PIECE OF THE BRAKE STATOR HAD BROKEN OFF AND PENETRATED THE WHEEL HUB AS THE ACFT WAS TOWED DEFLATING THE TIRE AND MAKING IT IMPOSSIBLE TO REMOVE WHEEL. THE BROKEN PIECE OF THE STATOR WAS REMOVED ALLOWING REMOVAL OF THE WHEEL. WHEEL AND BRAKE ASSY REPLACED.

CA081122001	BOEING	PWA	BULKHEAD	CRACKED
9/29/2008	727225	JT8D9A		FUSELAGE

(CAN) DURING WALK-AROUND INSP, FOUND BELTFRAME AT 9G BULKHEAD CRACKED BY LT CARGO CAN CUTOUT. TEMPORARY REPAIR CARRIED OUT. A/C FERRIED. PERMANENT REPAIR CARRIED OUT. ACFT RETURNED TO SERVICE.

CA081119004	BOEING	PWA	MOTOR	FAILED
11/18/2008	727225	JT8D9A	MS391130Z	TE FLAPS

(CAN) ENROUTE, SYS A HYD QTY DROPPED TO ZERO. MX FOUND OTBD FLAP HYD MOTOR FAILED. MOTOR REPLACED AND SYS CHECKED SERVICABLE.

CA081121011	BOEING	PWA	ACCESSORY UNIT	FAILED
11/20/2008	727227	JT8D9A	656021132	MLG

(CAN) JUST AFTER TAKEOFF, THE CREW ATTEMPTED TO SELECT GEAR UP, THE GEAR HANDLE WOULD NOT GO PAST THE OFF POSITION. ACFT RETURNED TO WHERE MAINT REPLACED THE LANDING GEAR ACCY UNIT. A/C RETURNED TO SERVICE.

CA081112005	BOEING	PWA	CONNECTOR	DAMAGED
11/7/2008	727247	JT8D15A	FRF6E12S3S	FIRE WARNING SYS

(CAN) AT APPROX 700 FT, AGL T/O YHZ FIRE WARNING LIGHTS ON GLARE SHIELD WERE DIMMLY ILLUMINATED. NO AURAL WARNING. APU FIRE HANDLE ILLUMINATED. SWITCH PULLED AND BOTTLE DISCHARED. ACFT RETURNED TO DEPARTURE. RECTIFICATION AFTER TROUBLESHOOTING FOUND APU FIRE SENSOR/RESPONDER CONNECTOR D1428 SEVERELY CORRODED. INTERIOR OF CONNECTOR FOUND PACKED WITH GREENISH REDIDUE. BOTH ENDS OF CONNECTOR (SOCKETS AND PINS) CLEANED AND INSPECTED. APU FIRE DETECTION SYS TESTED IAW AMM 26-15-00 FOLLOWUP: REF: WRI 26-11/3077 APU FIRE SENSOR/RESPONDER CONNECTOR D1428 TO BE REPLACE. FOUND CONNECTOR WEATHER GASKET DAMMAGED CAUSING CORRROSION IN SOCKETS.

CA081030003	BOEING	PWA	TRANSMITTER	FAILED
10/16/2008	737201	JT8D17	1817392	LT FLAP POSITION

(CAN) DURING FINAL APPROACH, WHEN THE PILOTS SELECTED FLAPS 25, THE FLAPS STOPPED SLIGHTLY PAST FLAPS 15. THE PILOTS SELECTED FLAPS UP AND OVERSHOT THE APPROACH. THE FLAPS RETRACTED OK. ON THE NEXT APPROACH, THE FLAPS OPERATED NORMALLY. MX INSPECTED AND OPERATED THE FLAPS SYS AND FOUND NO FAULTS. REPLACED THE COCKPIT FLAP INDICATOR, SUSPECTING THE ACFT HAD A FALSE FLAP ASSYMETRY PROBLEM. THE ACFT FLEW THE NEXT 2 DAYS WITH NO PROBLEMS. THE FOLLOWING DAY, THE ACFT EXPERIENCED THE SAME PROBLEM ON APPRAOCH INTO AIRPORT. ON THIS OCCURANCE THE PILOTS HAD TIME TO SELECT THE FLAPS UP AND RESELECT THE FLAPS DOWN. ON THE SECOND TRY, THE FLAPS OPERATED NORMALLY. MX INSPECTED AND FUNCTIONED THE FLAP SYS A SECOND TIME AND FOUND THE LT FLAP TRANSMITTER WAS MAKING A STRANGE NOISE. THE TRANSMITTER WAS REMOVED AND INSPECTED. WHEN THE TRANSMITTER SHAFT WAS ROTATED, THE MOVEMENT WAS ROUGH. REPLACED THE LT FLAP TRANSMITTER AND

THERE HAVE BEEN NO FURTHER OCCURANCES.

CA081210005	BOEING	PWA	CYLINDER	WORN
12/9/2008	737232	JT8D17	654611635	STRUT

(CAN) RT MLG LOST FLUID. DURING ATTEMPTED SEAL CHANGE, THE INNER CYLINDER OF THE GEAR HAD A 6" BY 2" PIECE OF CHROME MISSING FROM THE INNER CYLINDER.

CA081002004	BOEING	PWA	BATTERY	OVERHEATED
10/1/2008	737275C	JT8D17		MASTER

(CAN) PASSENGERS WERE ON THE ACFT, ACFT WAS ON EXTERNAL GROUND POWER AT THE TIME. WHEN THE PILOTS WENT TO START THE APU, THEY NOTICED THE START WAS NOT NORMAL, AND THE APU ALSO DID NOT START. APU OVERSPEED CAUTION LIGHT ILLUMINATED. CAPTAIN WENT TO THE E&E BAY TO RESET THE APU BOX. APU START ATTEMPTED AGAIN, SAME RESULT. PILOT AGAIN RESET THE APU CONTROL BOX, AND THAT WAS WHEN HE NOTICED THE BATTERY SMOKING/VENTING. IT WAS HOT TO THE TOUCH. PEOPLE WERE REMOVED FROM THE ACFT. MX CONFIRMED THE BATTERY WAS STILL HOT, AND IT WAS REMOVED. A NEW OVERHAULED BATTERY WAS INSTALLED, AND THE BATTERY CHARGING CIRCUIT WAS TESTED IAW WORKCARD. NO FAULTS WERE NOTICED, ACFT WAS RELEASED BACK INTO SERVICE.

DU4R2008263	BOEING		FLOORBEAM	CORRODED
11/24/2008	7378Q8		36726	FUSELAGE

FOUND CORROSION IN AFT PIT ON TOP SURFACE OF FLOORBEAM AT BS 787 TO BS 847 RBL 16.

CA081125001	BOEING	RROYCE	WIRE HARNESS	CHAFED
11/25/2008	75728A	RB211535E437		

(CAN) IN FLIGHT CREW NOTICED SMOKE AND FLASHES ABOVE ROW 4DEF. MX FOUND WIRING HARNESS CHAFED BY CEILING PANEL RESULTING IN EXPOSED WIRES ARCHING.

2008FA0000838	BOEING		PRECOOLER	FRACTURED
11/21/2008	767222		7732873	ZONE 400

NR1 PYLON PRECOOLER CRACKED IN SEVERAL PLACES. REMOVED AND REPLACED NR1 ENG PRECOOLER IAW MM 36-11-15. WORK PERFORMED ON NR 35501 S/O 599197.

2008FA0000850	BOEING	PWA	PIN	INSTALLED
10/24/2008	767238	JT9D7R4D		EVAC SLIDE

A SLIDE DEPLOYMENT OF THE RT AFT ENTRY DOOR OF THE ACFT WAS ATTEMPTED IN CONJUNCTION WITH A DITCHING DEMONSTRATION IN SUPPORT OF OUR FAR PART 125 CONFORMITY ASSESSMENT BY FSDO - 25. THE SLIDE DID NOT EXTRACT FROM THE DOOR BUSTLE AS THE DOOR WAS OPENED. UPON INVESTIGATION OF THE CAUSE OF THE FAILURE, IT WAS FOUND THAT THE GIRT BAR WAS NOT PROPERLY INSERTED INTO THE GIRT BAR CARRIER OF THE SLIDE AS CALLED OUT IN AMM 25-66-01, PAGE 405, STEP (15). THIS CONDITION WAS CORRECTED AND THE DOOR WAS CLOSED TO ATTEMPT SLIDE DEPLOYMENT AGAIN. ON THE SECOND ATTEMPT, THE SLIDE PACK DID RELEASE FROM THE DOOR AND DROPPED PROPERLY, HOWEVER IT DID NOT INFLATE. THE IN-CABIN FA OPERATING THE DOOR ATTEMPTED TO MANUALLY INFLATE THE SLIDE USING THE APPROPRIATE PROCEDURE; HOWEVER THE SLIDE WOULD NOT INFLATE. AT THIS TIME, THE SLIDE WAS CHECK TO DETERMINE THE CAUSE OF THIS SECOND OPERATIONAL FAILURE. IT WAS FOUND THAT THE SLIDE INFLATION BOTTLE SAFETY PIN HAD NOT BEEN REMOVED ON INSTALLATION OF THE SLIDE AS CALLED OUT IN THE AMM 25-66-01, PAGE 406, STEP (18). (K)

2008FA0000890	BOLKMS		BEARING	CRACKED
11/19/2008	BO105LSA3		4639306006	TAIL ROTOR DRIVE

MAIN TRANSMISSION WAS DELIVERED FOR O/H. THERE WAS NO NOTICE ABOUT AN INCIDENT OR A CHIP WARNING. CHIP DETECTOR AND OIL FILTER WERE CLEAN. AT THE BEGINNING OF THE DISASSEMBLY, THE MECHANIC NOTED THAT THE TAILROTOR DRIVE DID NOT MOVE WHEN THE INPUT FLANGE WAS TURNED. AFTER REMOVING THE UPPER HOUSING, A SEVERE DAMAGE OF THE TAIL ROTOR DRIVE PINION AND THE ASSOCIATED ROLLER BEARINGS WERE DETECTED. THE BEARING WAS CRACKED, AND THE TEETH OF THE PINION WERE

SEVERELY DEFORMED. THERE WERE MANY METAL CHIPS INSIDE THE GEARBOX. (K)

2008FA0000889	BOLKMS	PINION GEAR	DEFORMED
11/19/2008	BO105LSA3	4639306038	TAIL ROTOR DRIVE

THE MAIN TRANSMISSION WAS DELIVERED FOR OVERHAUL. THERE WAS NO NOTICE ABOUT AN INCIDENT OR A CHIP WARNING. CHIP DETECTOR AND OIL FILTER WERE CLEAN. AT THE BEGINNING OF THE DISASSEMBLY, MECHANIC NOTED THAT THE TAILROTOR DRIVE DIDN'T MOVE WHEN THE INPUT FLANGE WAS TURNED. AFTER REMOVING THE UPPER HOUSING, A SEVERE DAMAGE OF THE TAIL ROTOR DRIVE PINION AND THE ASSOCIATED ROLLER BEARINGS WAS DETECTED. THE BEARING WAS CRACKED AND THE TEETH OF THE PINION WERE SEVERELY DEFORMED. THERE WERE MANY METAL CHIPS INSIDE THE GEARBOX. (K)

CA081105001	BOLKMS	ALLSN	PUMP	MISINSTALLED
11/5/2008	BO105S	250C20B	D107318D1	FUEL BOOST

(CAN) TWICE NOW WE HAD FOUND THE FWD MAIN TANK BOOST PUMPS WHERE INSTALLED IN THE WRONG ORIENTATION, THE TRANSFER TUBES (FEED LINE) WAS PULL OUT OF THE FEED TANK. THE FORWARD TRANSFER PUMP HAS SYMMETRICAL MOUNTING HOLE. THE ORIENTATION OF THE PUMP DETERMINES THE FUEL FEED LINE POSITION. IF THE PUMP IS ROTATED THE FUEL FEED LINE MAY COME OUT OF POSITION. THIS HAS FOR CONSEQUENCE TO REDUCE THE FUEL TRANSFER TO THE FEED TANK. THE PROPER INSTALLATION FOR THE FORWARD FEED PUMP IS THE FEED LINE ATTACHING HARDWARE SHOULD BE ORIENTED 12.00 O`CLOCK, WITH THE LONGITUDINAL AXIS. (SEE FIGURE 62-3 DETAIL F) IN THIS CASE THE HARDWARE WAS LOCATED AT 8.00 O`CLOCK.

CA081121007	BOMBDR	LINE	CHAFED
11/7/2008	BD1001A10	1005354226007	HYDRAULIC SYS

(CAN) ACFT LOST ALL HYD FLUID IN THE RT SYS DURING FLIGHT. NO INFO ON FLIGHT PROFILE, CAS MESSAGES OR QTY`S NOTED. CREW UNAVAILABLE FOR DEBRIEF AT THIS TIME. REPLACED AFFECTED LINE, CLAMP AND HARDWARE.

CA081121008	BOMBDR	LINE	CHAFED
11/9/2007	BD1001A10	1005354220N50192	HYDRAULIC SYS

(CAN) CREW REPORTED DURING CRUISE FLIGHT THEY LOST ALL RT SIDE HYD FLUID. NUMEROUS CAS MESSAGES. RT SYS SHOWS 2 PERCENT QUANTITY AND 0 PSI. TEMP 36 C. ACFT DIVERTED IN FLIGHT. AFTER LANDING CREW NOTED HYD FLUID RUNNING OUT OF THE LR FUSELAGE BY THE MAIN WHEEL WELL AREA. FOUND NR 2 ENGINE HYD SUPPLY LINE WITH CLAMP THAT HAD CHAFED INTO THE TUBE ASSY AND WORN A HOLE.

CA081121009	BOMBDR	LINE	CHAFED
7/11/2008	BD1001A10	1005354226007	HYDRAULIC SYS

(CAN) DURING CRUISE FLIGHT, THE AMBER (R HYD PRESS LOW) CAS MESSAGE ILLUMINATED. PILOT OBSERVED THE HYD SYNOPTIC PAGE AND NOTED THE FLUID LEVEL IN THE RT HYD RESERVOIR BEGAN DROPPING. ACFT BEGAN DESCENT. DURING APPROACH, PILOT NOTED THE RT HYD RESERVOIR QUANTITY WAS READING (4 PERCENT). AFTER LANDING, VISUAL INSP OF THE ACFT REVEALED HYD FLUID STREAMING FROM THE WHEEL WELL AREA TO THE TAIL OF THE ACFT. FOUND LINE IN THE AFT EQUIPMENT BAY HAD A HOLE CHAFED INTO IT BY A FAIRLEAD BLOCK.

CA081118009	BOMBDR	HNYWL	TRANSPONDER	MALFUNCTIONED
11/1/2007	BD1001A10	AS90711A		NAV/COMM

(CAN) LOSS OF COMM/NAV/ TRANSPONDER OCCURRED BACK IN NOV 2007. NOT REPORTED UNTIL 9/11/08 AFTER CUSTOMER HAD HEARD OF A SIMILAR OCCURRENCE ON ANOTHER CHALLENGER 300 (20016) THROUGH ADV COMMITTEE CONFERENCE CALL. IN FLIGHT CREW NOTED THAT TRANSPONDER CODE CHANGING FREQ. LT AND RT RADIOS INDICATED YELLOW ON C/P MFD. ALSO ON C/P MFD, HAD AMBER BOXED DCP FLASHING ON AND OFF. IAW RECOMMENDATION FROM REP, THE C/P DCP CHANGED OUT. TECHS UNABLE TO DUPLICATE PROBLEM.

CA081103001	BOMBDR	HNYWL	DISPLAY	FAILED
10/16/2008	BD1001A10	AS90711A		

(CAN) IN FLIGHT DURING DESCENT ACFT LOST ALL RADIOS AND NR 2 MFD. THEY WERE ABLE TO COMMUNICATE TO ATC BY GOING TO THE REVERSIONARY PANEL AND TURNING THE TUNE KNOB TO THE COMM1 121.5 SELECTION. LANDING WAS UNEVENTFUL. AFTER LANDING 20 MINUTES LATER CREW INDICATED THAT ALL THE FREQUENCIES WENT AMBER AND LOST THEIR ABILITY TO TUNE THE RADIO THROUGH THE FMS. WHEN THEY WOULD TRY TO TUNE THE RADIOS THE FREQUENCIES WOULD CHANGE ON THERE OWN. THE TRANSPONDER WAS ALSO INTERMITTENT, AND THEN THE COPILOT`S MFD WENT BLACK. HAD THE CREW GO INTO THE MDC FAULT HISTORY AND THEY CAME UP WITH A LOT OF FAULTS. PLEASE SEE ATTACHED PIC`S BELOW FOR FAULTS AND THE B3 CODES. CREW THEN DID A COMPLETE POWER DOWN ACFT AND WAIT A FEW MINUTES. THEN THEY POWERED ACFT BACK UP AND ALL WENT BACK TO NORMAL.

CA081112004	BOMBDR	RROYCE	SPOILER SYS	MALFUNCTIONED
11/10/2008	BD7001A10	BR700710A220	GT41501009	

(CAN) AFTER TAKEOFF AND DURING CLIMB, A LATERAL CONTROL MOVEMENT TO THE LT WAS NOTICED . ONE SPOILERON DEPLOYED ON THE LT WING (2 PAIR OF MULTI-FUNCTION SPOILER (MFS) IAW WING ON THIS ACFT). THE LT NR 2 MFS WAS AMBER LINE ON THE FLIGHT CONTROL SYNOPTIC PAGE. SEVERAL EXTRACT AND RETRACT ACTIONS ON THE SPOILERS SYS PERFOMED, WITHOUT SUCCESS AND AILERON TRIM WAS ADJUSTED TO CORRECT THE ACFT LEVELING. CREW DECIDED TO ABORT THE FLIGHT AND LAND TO THE AIRPORT DEPARTURE . AFTER LANDING ,THE LT NR 2 MFS WAS STILL FULLY DEPLOYED AND RETRACTED BY ITSELF WITH THE BLEED DOWN OF HYD PRESSURE OF THE SYSTEM. (HYD OFF)

CA081114001	BOMBDR	PWC	WIRE HARNESS	SHORTED
11/13/2008	DHC8400	PW150A	464605	PROXIMITY SWITCH

(CAN) CREW SELECTED GEAR DOWN AND GOT 3 GREENS AND LT MLG DOOR AMBER LIGHT. ALTERNATE EXTENSION C/O AND CREW OBSERVED ALTERNATE INDICATION SHOWED LT MLG (UNSAFE). CREW DECLARED EMERGENCY AND LANDED. PAX DEPLANED ON RUNWAY AND AFTER GEARS WERE PINNED ACFT TAXIED TO GATE. FAULT CONFIRMED BY PSEU TO BE LT LGDNLK2 OPEN CIRCUIT. PROXIMITY SWITCH HARNESS ASSY PN 46460-5 REPLACED AND ACFT RETURNED TO SERVICE.

CA081111005	BOMBDR	PWC	SELECTOR VALVE	SHORTED
11/4/2008	DHC8400	PW150A	483003	MLG

(CAN) CREW REPORTED A NOSE STEERING CAUTION ON TAKEOFF. UPON LANDING, ALL 3 GEARS SHOW RED WITH GEAR DOWN SELECTION. ALTERNATE EXTENSION USED IAW QRH. ALL GREEN WITH ALT EXTENSION. FAULT CODES HAVE BEEN RETRIEVED AND ENTERED INTO THERE COMPUTER SYS. MX FOUND A SHORT TO GROUND IN THE UP SOLENOID OF THE LANDING GEAR SELECTOR VALVE.

CA081112001	BOMBDR	PWC	PROXIMITY SENSOR	UNSERVICEABLE
11/10/2008	DHC8400	PW150A	401020101	LT MLG

(CAN) PILOTS REPORT: AFTER GEAR SELECTED UP, LT MAIN GEAR DOOR REMAINED OPEN WITH AMBER ADVISORY LIGHT. CONTINUED CLIMB NOT ABOVE 185KTS, CONDUCTED AFTER TAKE-OFF CHECKLIST. QRH CONSULTED AND ACTIONED ALTERNATE GEAR EXTENSION. LINE MX CONFIRMED DEFECT AND INVESTIGATION REVEALED THE `LT GEAR DOOR CLOSED` PROX SENSOR TO BE UNSERVICEABLE. UNSERVICEABLE SENSOR REPLACED WITH A NEW ITEM AND THE INSTALLED SENSOR WAS RIGGED IAW THE ACFT MM. ACFT RETURNED TO SERVICE WITHOUT FURTHER INCIDENT.

CA081112002	BOMBDR	PWC	SHROUD	MISMANUFACTURED
5/29/2008	DHC8400	PW150A	85730800002	WING BOX

(CAN) DURING PRODUCTION OF 4208 IT WAS DISCOVERED THAT THE CENTER WING LOWER SHROUD RT DRAIN HOLES WERE NOT PRESENT. A DISCREPANCY WAS RAISED AND CLEARED BY DRILLING NEW HOLES IN SITER. UPON THE DELIVERY/ACCEPTANCE FLIGHT, IT WAS DISCOVERED THAT THE AFT COFFEE MARKER WAS UNSERVICEABLE. A TECHNICAL INVESTIGATION REVEALED 6 OF 9 (115 VAC) WIRES DAMAGED. A REPAIR WAS MADE IAW WDM 20-16-00. A SMS/SRS WAS RAISED.

CA081121003	BOMBDR	PWC	ACM	ODOR
11/19/2008	DHC8400	PW150A	8209063	RIGHT

(CAN) IN CRUISE F/A CALLED TO REPORT SMELL AND MIST. ASKED FOR AN UPDATE IF IT WORSENED, THEN

PREPARED FOR OXYGEN DRILL IAW QRH. ON APPROACH TO LAND THE (CABIN PACK HOT CAUTION) LIGHT CAME ON. THE QRH WAS CONSULTED AGAIN AND THEN THE CAUTION LIGHT WENT OUT. WE THEN LANDED AND COMPLETED THE FLIGHT NORMALLY. ON-SITE LINE MX INVESTIGATION IDENTIFIED THE RT (CABIN) AIR CYCLE MACHINE (ACM) TO BE NON-OPERATIONAL DUE BEING SEIZED. FUNCTIONAL CHECK AIR CONDITIONING SYS SATISFACTORY WITH FLIGHT COMPARTMENT PACK ONLY WITH TEMP COMTROL AT 1 O`CLOCK POSITION. ACFT POSITIONED BACK TO MX BASE UNDER MEL 21-50-1PROVISIONS. ACM REPLACED AND TESTED IAW THE MM 21-51-21. ACFT RETURNED TO SERVICE WITHOUT FURTHER INCIDENT.

CA081125003	BOMBDR	PWC	WINDSHIELD	FAILED
11/18/2008	DHC8400	PW150A	80260008	COCKPIT

(CAN) AT ABOUT 500 FT ON FINAL APPROACH TO THE AIRPORT THE RT WINDSHIELD SHATTERED. THE FLIGHT CREWS INITIAL REACTION WAS THAT THE WINDSHIELD HAD SUFFERED A BIRD STRIKE, BUT THIS WAS NOT THE CASE. THERE WAS NO EVIDENCE OF A BIRD STRIKE AND IT WAS THE INNER GLASS PLY THAT SHATTERED AND COVERED THE COPILOT WITH FINE GLASS DEBRIS. THE RESISTANCE OF THE HEATING ELEMENT (TERMINAL L1 AND L2) AND THE TEMPERATURE HEAT SENSORS (TERMINALS CB, DA AND FE) WAS CHECKED AND ALL FOUND TO BE WITHIN THE SPECIFICATIONS THE TEST REQUIREMENTS OF CMM 56-10-12. RT WINDSHIELD REMOVED AND REPLACED WITH A NEW WINDSHIELD IAW AMM TASKS 56-10-01-000-801, 56-10-01-400-801 AND 30-41-00-710-802.

CA081105004	BOMBDR	PWC	LINE	RUPTURED
11/3/2008	DHC8400	PW150A		HYD SYSTEM

(CAN) CREW NOTICED HYD QTY LOSS ON NR 2 SYS. REPORTEDLY, NR 2 HYD ISOLATON VALVE CAUTION LIGHT CAME ON, BUT HYD PRESSURE REMAINED NORMAL. THE CREW DECIDED TO PERFORM ALTERNATE GEAR EXTENSION FOR LANDING. ACFT TOWED TO HANGAR, WHERE TECHNICIANS DISCOVERED RUPTURED HYD LINE IN NR 1 MLG GEAR BAY. LINE HAD BEEN CHAFED FROM A BONDING CLAMP (AN735C4). TECH REPORTED BONDING CLAMP WAS LOOSE, AND APPEARED TO BE INSTALLED WITHOUT SEALANT. RUPTURED HYD LINE WAS FOR THE NR 1 MLG DOWNLOCK ACTUATOR. LINE REPAIRED WITH A PERMASWAGED SPLICE SECTION, AND A/C RETURNED TO SERVICE.

CA081208002	BOMBDR	PWC	SEQUENCE VALVE	MALFUNCTIONED
12/7/2008	DHC8400	PW150A	483023	LT MLG DOOR

(CAN) FLIGHT CREW REPORT: LT MAIN AMBER GEAR DOOR LIGHT FAILED TO EXTINGUISH ON GEAR RETRACTION (VISUALLY OPEN). ALT EXTENSION PERFORMED. REPLACED LT MLG SSV IAW 32-31-41

CA081105005	BOMBDR	PWC	LINE	LEAKING
11/3/2008	DHC8400	PW150A	82974351003	HYD SYSTEM

(CAN) DURING FLIGHT, CREW NOTICED NR 2 HYD ISO VALVE CAUTION LIGHT CAME ON, NR 2 HYDRAULIC PRESSURE REMAINED NORMAL, AND THERE WAS A "SMALL QUANTITY" OF FLUID REMAINING IN NR 2 SYSTEM. CREW DECLARED EMERGENCY LANDING. CREW PERFORMED AN ALTERNATE GEAR EXTENSION, AND ACFT LANDED. ACFT TOWED TO HANGAR WHERE TECHNICIANS DISCOVERED HYDRAULIC FLUID DRIPPING FROM NR 2 NACELLE, O/B OF JET PIPE CENTER SECTION. JET PIPE REMOVED AND TECHNICIANS DISCOVERED A SPLIT IN THE HYDRAULIC LINE, WHERE IT HAD BEEN CHAFFING ON THE FWD JET PIPE SHROUD DAMAGED LINE WAS PART OF MLG `NR 2 GEAR UP` PIPING, P/N 82974351-003. LINE TO BE REPLACED.

CA080922001	BOMBDR	PWC	TIRE	FAILED
9/17/2008	DHC8400	PW150A	DR0231T	NR 3

(CAN) PASSENGER REPORTED NR 3 TIRE BURST DURING TAKE OFF. CREW EXTENDED GEAR AND FA CONFIRMED TIRE WAS BLOWN. ACFT RETURNED TO BASE FOR LANDING. OPERATOR REPORTED TIRE WAS ON SECOND RETREAD WITH 238 CYCLES 255 HOURS. AXLE WAS NOT DAMAGED AND IS NOT BEING REPLACED. THE RUNWAY WAS SWEPT AFTER THE INCIDENT AND NO DEBRIS OTHER THAN BITS OF TIRE WERE FOUND. INSPECTION COMPLETED AND TIRE REPLACED,

CA081001001	BOMBDR	PWC	PUMP	LOW PRESSURE
9/16/2008	DHC8400	PW150A		ENGINE OIL

(CAN) DURING DESCENT, THE LOW OIL PRESSURE WARNING FOR THE NR 2 ENGINE SOUNDED. THE PILOT ELECTED TO SHUTDOWN AND SECURE THE ENGINE AND AN UNEVENTFUL SINGLE ENGINE LANDING WAS

PERFORMED AT DESTINATION. GROUND INSPECTION REVEALED NO SIGNS OF EXTERNAL OIL LEAKAGE, HOWEVER THE OIL TANK SHOWED "EMPTY". INITIAL TROUBLESHOOTING REVEALED INTERNAL DISTRESS OF THE OIL PUMP ASSY. THE ENGINE HAS BEEN REMOVED AND WILL BE RETURNED FOR INVESTIGATION. MFG WILL CONTINUE INVESTIGATING THE EVENT AND ADVISE OF ROOT CAUSE ONCE ESTABLISHED.

CA081104001	BRAERO	GARRTT	HOSE	LEAKING
10/28/2008	BAE125800A	TFE7315R		DOOR ACTUATOR

(CAN) PILOTS REPORTED LOSS OF HYD PRESSURE AFTER LANDING WHILE TAXING BACK TO AMO. ON INSP, FOUND IN THE RT GEAR WELL A FLEX HYD LINE INSTALLED WITH A SLIGHT TWIST ON IT. THE LOCKWIRE ON THE B-NUT WAS LOOSE, AND THE TWIST ON THE HYD LINE AIDED IN ALLOWING THE B-NUT TO BACK OFF CAUSING THE HYDR LEAK IN THE RT GEAR WELL. AREA CLEANED UP. THE LINE WAS INSPECTED FOR CRACKS AND PROPER ALIGNMENT RE-INSTALLED RE-TORQUES AND RE-LOCKWIRED. INSPECTED HYDR PRESSURE FILTER AND FOUND IT TO BE SERVICEABLE AND RE-INSTALLED FILTER. CARRIED OUT HYD FUNCTIONS AND LEAK CHECKS ON THE ACFT USING GROUND HYD CART. THERE WERE NO APPARENT LEAKS FOUND. CARRIED OUT GROUND RUNS ON AIRCRAFT, BLED HYD PUMPS AND CHECKED SYS PRESSURE AND CYCLED ALL HYD SYS. ALL SYS OPERATED OK WITH SINGLE OR BOTH ENGINES RUNNING. RE-INSPECTED HYD PRESSURE FILTER AND FOUND IT TO BE SERVICEABLE. RE-INSPECTED FOR LEAKS, NO LEAKS FOUND ACFT RELEASED FOR RETURN TO SERVICE.

CA080221002	CESSNA	CONT	MUFFLER	DAMAGED
2/8/2008	150L	O200A	PN04504003	EXHAUST SYS

(CAN) THIS IS AN ON GOING ISSUE. THIS EXHAUST MUFFLER PASSED THE VISUAL INSP AS CF90-03. WHEN PRESSURE TESTED WITH AIR AND WATER, 3 PIN HOLES SHOWED. 2 WERE IN OPEN BARE METAL SURFACE. ONE WAS IN THE LONGITUDINAL SEAM. ANOTHER EXPERIENCED AME WAS IN MY SHOP FOR OTHER REASONS. ASKED HIM TO VISUALLY INSPECT IAW CF90-03. EVEN THOUGH HE KNEW THERE WERE LEAKS, SO HE LOOKED MORE INTENSELY, HE WAS UNABLE TO FIND ANY, VISUALLY. THIS IS A 50 PERCENT FAILURE RATE FOR ACFT IN MY SHOP. AGAIN, THIS SHOP ONLY DOES BUBBLE TESTS AS THE VISUAL TEST, IAW CF90-03.

CA080219003	CESSNA	LYC	ATTACH BRACKET	CRACKED
9/14/2007	152	O235L2C	04320049	HORIZONTAL STAB

(CAN) DURING INSP OF FIN ATTACH BRACKET NUT PLATES IAW AD 80-11-04 CRACKS WERE DISCOVERED RUNNING ALONG THE BEND RADIUS OF THE WELDED BRACKET. THE AD ALLOWS FOR REMOVING REPETATIVE INSP REQUIREMENTS IF THE NUT PLATES ARE DRILLED OFF AND REPLACED WITH FIBERLOCKING NUTS. ALTHOUGH THE AD MAY NO LONGER MAY BE APPLIABLE IN SOME ACFT THE ENTIRE WELDED BRACKET SHOULD BE INSPECTED CLOSELY EVERY 100-HRS.

CA080922002	CESSNA	LYC	IMPULSE COUPLING	MISMANUFACTURED
8/22/2008	152	O235L2C		MAGNETO

(CAN) ENGINE WAS OVERHAULED AND STORED UNTIL AUGUST 2008. DURING INSTALLATION ON AUG. 22, 2008, IT WAS NOTICED THAT THERE WAS NOT :CLICKING: OF THE MAGNETO IMPULSE COUPLINGS AS THE PROPELLER WAS ROTATED A NR OF TIMES. BOTH MAGNETO (UNISON 4381`S, S/N 07031616 AND 07031617) WERE REMOVED FROM THE ENG AND INSPECTED, THE PAWLS ON THE IMPULSE COUPLINGS ON BOTH MAGNETOS WOULD NOT ENGAGE PROPERLY OR AT ALL. IT APPEARED THAT THE IMPULSE COUPLINGS HAD BEEN ASSEMBLED INCORRECTLY.

CA080317006	CESSNA	LYC	CYLINDER	WORN
2/22/2008	152	O235L2C		ENGINE

(CAN) ALUMINUM FOUND IN OIL FILTER DURING 100 HR INSP. CYLINDER BOROSCOPED, SUSPECT CYLINDER REMOVED, FWD PISTON PIN FOUND WORN ON NR 1 CYLINDER.

CA080317009	CESSNA	LYC	RUDDER BAR	CRACKED
3/2/2008	152	O235L2C	04115261	COCKPIT

(CAN) PILOT NOTED LT PILOTS RUDDER PEDAL WAS NOT IN IT`S CORRECT POSITION. THE RUDDER BAR WHICH IS A WELDMENT WAS FOUND TO BE CRACKED AT THE ATTACHMENT POST FOR THE LT RUDDER PEDAL.

CA080916006	CESSNA	LYC	ATTACH BRACKET	CRACKED
9/12/2008	152	O235L2C	04320049	VERTICAL STAB

(CAN) CARRIED OUT SEB 03-6 ON VERTICAL TAIL ATTACH BRKT AND STAB SPAR. SPAR WAS NOT CRACKED BUT THE STEEL ATTACH BRKT WAS CRACKED AROUND A RIVET HOLE FOR THE PREVIOUSLY INSTALLED NUT PLATES. AD PREVIOUSLY ALLOWED REMOVAL OF NUT PLATES. THIS OPERATOR HAS SEEN AT LEAST TWO OTHER FAILURES OF THIS PART. A/C TT IS ~22,950 HOURS OPERATING IN AN FTU. REPLACED PART WITH A USED, INSPECTED SERVICEABLE PART DUE TO NO PARTS SUPPORT FROM MFG. NOTE: NO PICTURE, NOT ABLE TO TAKE A PICTURE FROM THE INSIDE OF THE BRACKET.

CA081106003	CESSNA	LYC	CASE	CRACKED
10/30/2008	152	O235N2C		ENGINE

(CAN) DURING SCHEDULED MAINT (OIL CHANGE) OIL WAS DISCOVERED LEAKING FROM THE UPPER ENGINE CRANK CASE. FUTHER INSP CONFIRMED A CRACK 3 INCHES LONG BETWEEN CYLINDER NR 2 AND 4. ENGINE WAS REMOVED FOR REPAIR.

2008FA0000852	CESSNA	CONT	OIL FILTER	RUPTURED
11/29/2008	172A	O300D	ES48109	ENGINE

ON 11/26/2008, APPROXIMATELY 1 MINUTE AFTER START-UP THE OIL FILTER RUPTURED RESULTING IN MASSIVE LOSS OF ENGINE OIL. THE OIL FILTER WAS THE LAST OF FOUR THAT WERE PURCHASED ON 10/05/2006. THE ENGINE WAS SHUT DOWN UPON NOTICE OF LOW OIL PRESSURE AND HAS BEEN DETERMINED TO BE UNHARMED BY THE LOCAL AP MECHANIC.

CA081208001	CESSNA	LYC	FORK	CRACKED
11/19/2008	172M	O320E2D	SK1759	NOSE GEAR

(CAN) ON ROLL OUT FROM LANDING NOSE WHEEL BROKE OFF. ACFT SLID APPROX. 400` ON NOSE AND CAME TO A STOP. APPARENT CAUSE METAL FATIGUE OF NOSE WHEEL FORK. TSB HAS SECURED FAULTY PARTS AND INVESTIGATING FURTHER.

CA081204009	CESSNA	LYC	MUFFLER	LEAKING
12/1/2008	172M	O320E2D	175400125	ENGINE

(CAN) WHILE CARRYING OUT AD CF90-03R2 A SMALL LEAK WAS NOTED AT THE TOP OF THE EXHAUST PIPE JUNCTION WITH THE MUFFLER BODY. THIS IS A COMMON PLACE FOR THESE MUFFLERS TO FAIL.

CA081204010	CESSNA	LYC	MUFFLER	CRACKED
12/1/2008	172M	O320E2D	175400122	ENGINE

(CAN) DURING PREFLIGHT INSPECTION, A 2" CRACK IN THE END OF TAILPIPE WAS NOTED, RUNNING PARALLEL TO THE PIPE AXIS. THE CRACK APPEARS TO BE AT THE EDGE OF A HOT SPOT CAUSED BY THE WAY THE EXHAUST GASES FLOW OUT OF THE PIPE AND MAY HAVE BEEN A RESULT OF THERMAL STRESSES SET UP BY UNEVEN HEATING.

CA081210001	CESSNA	LYC	TUBE	TORN
11/8/2008	172M	O320E2D	5005	MLG TIRE

(CAN) THE NOSE TIRE INNER TUBE HAD 195 HRS SINCE NEW. IT WAS FOUND RIPPED. NO HARD LANDING WAS REPORTED. THE INSIDE OF THE TIRE WAS FOUND FREE OF ANY DEFECTS.

CA081210002	CESSNA	LYC	TUBE	TORN
12/8/2008	172M	O320E2D	5005	NLG TIRE

(CAN) THE NOSE WHEEL TIRE INNER TUBE HAD 220 HRS SINCE NEW. IT WAS FOUND TORN ON THE SIDE WALL. NO HARD LANDING WAS REPORTED. THE INSIDE OF THE TIRE WAS FOUND FREE OF DEFECTS. THIS TO ME IS AN OBVIOUS MANUFACTURING PROBLEM. IT HAPPENED ON TAXI FROM THE RUNWAY AFTER NORMAL LANDING.

CA070605004	CESSNA	LYC	BELLCRANK	MISINSTALLED
6/5/2007	172M	O320E2D	05341221	ELEVATOR

(CAN) ELEVATOR UP TRAVEL FOUND TOO LOW. INVESTIGATION REVEALED UP CABLE ATTACH BOLT INSTALLED WRONG WAY. THIS RESULTED IN CONTACT WITH VERT STAB ATTACH BRACKET (WHERE CABLE PASSES THROUGH LIGHTENING HOLE)THUS LIMITING TRAVEL BY APPROX 3 DEG LESS THAN REQUIREMENT. BOLT INSTALLED PROPERLY AND SYSTEM RETURNED TO SERVICE.

CA080218004	CESSNA	LYC	SELECTOR	WORN
2/18/2008	172M	O320E2D	051338216	FUEL SYS

(CAN) DURING INSP THE FUEL SELECTOR DRIVE ASSY WAS FOUND TO BE WORN OUT. THIS ALLOWED A TANK SELECTION TO BE MADE WITHOUT THE SELECTOR POSITIONING BALL AND SPRING HSG REACHING THE DETENT IN THE FUEL SELECTOR HSG.

CA080318001	CESSNA	LYC	BRACKET	DETACHED
3/6/2008	172M	O320E2D		CARB HEAT

(CAN) DURING ROUTINE INSP TECH NOTICED NO CARB HEAT DROP ON IN-COMING RUN-UP. TECH DISCOVERED THAT ONE OF THE 2 CARB AIR BOX BUTTERFLY VALVE BRACKETS HAD BECOME DETACHED FROM SHAFT AND VALVE WAS NOT OPENING OR CLOSING PROPERLY.

2008FA0000892	CESSNA	LYC	CLEVIS PIN	MISSING
10/1/2008	172N	O320*		PILOT SEAT

CLEVIS PIN THAT SUPPORTS BACK OF PILOTS SEAT WORN OVER .2500 THRU. THIS PIN SLIDES IN A CURVED PORTION OF THE LOWER FRAME OF THE SEAT. PROBLEM PARTS ARE CLEVIS PINS THAT SUPPORT THE SEAT BACK ON NR (2), (BELLCRANK). THE BELLCRANK IS WELL WORN IN THE CURVED SECTION AND FILING INTO THE CLEVIS PIN. IF THIS PIN FAILS, THE BACK-REST OF THE SEAT WILL PARTIALLY DROP OFF OR POSSIBLY COMPLETELY DROP OFF WITH OBVIOUS RESULTS. MY SOLUTION WILL BE TO ROUND-OFF THE CURVE IN THE BACK OF THE BELLCRANK, SMOOTH IT WELL AND MAKE A STEEL ROLLER TO FIT INTO THE AREA OF THE CLEVIS PIN WHERE THE BELLCRANK WEARS ON IT. JUST PERIODICALLY REPLACING THE CLEVIS PIN SHOULD SUFFICE UNLESS THE COARSE WEARING IN THE BELLCRANK IS OBSERVED. THIS IS SERIOUS POIN AND NEEDS TO BE ADDRESSED IMMEDIATELY. LOST CLEVIS PIN.

CA080214011	CESSNA	LYC	CESSNA	SEAT BACK	BROKEN
1/24/2008	172R	IO360L2A		05142121	COCKPIT SEAT

(CAN) SEAT BACK FRAME BROKEN JUST ABOVE INSERT ON THE OTBD SIDE. NOTEWORTHY ITEM: THIS SEAT DID HAVE A STEAL BAR INSTALLED IAW AD 2007-05-10. WE DO NOT KNOW WHETHER THIS WAS A CONTRIBUTING CAUSE TO THE FAILURE.

CA060627005	CESSNA	LYC	ROLLER	DISLODGED
6/24/2006	172S	IO360L2A		CONTROL YOKE

(CAN) CO-PILOTS CONTROL YOKE GUIDE ROLLER ASSY FELL OUT AND ON INVESTIGATION WAS FOUND THAT WRONG SIZE BOLT WAS INSTALLED. FURTHER INVESTIGATION OF THE REST OF THE FLEET IT WAS FOUND THAT 2 OTHER ACFT HAD THE WRONG BOLT PN AND SIZE INSTALLED. CORRECT BOLT INSTALLED AND ACFT RETURNED TO SERVICE.

CA080929007	CESSNA	LYC	INDICATOR	INOPERATIVE
9/20/2008	172S	IO360L2A	38522	FUEL QTY

(CAN) FUEL QUANTITY SENDER FOUND ELECTRICALLY UNSERVICEABLE, READING EMPTY WHEN TANKS WERE FULL. SERVICEABLE FUEL SENDER INSTALLED.

CA080225009	CESSNA	CONT	CONTROL CABLE	FRAYED
2/21/2008	180K	O470*	0510105125	ELEVATOR

(CAN) LWR ELEVATOR CABLE FRAYED AT BULKHEAD STA 140, WHERE CABLE RIDES ON THE PHENOLIC BLOCK.

2008FA0000848	CESSNA	LYC	HOSE	DETERIORATED
11/19/2008	182	TIO540AK1A	STD2048ORLW18733	FUEL SYSTEM

ENGINE LOST RPM AND PARTIAL POWER ON GO-AROUND FROM REJECTED LANDING. ACFT THEN FLEW NORMAL

PATTERN AND LANDED WITHOUT INCIDENT. GROUND RUN-UP SHOWED NO ABNORMALITIES. MAINT REMOVED INJECTOR NOZZLES. NR 2 CYL NOZZLE WAS PLUGGED AND CONTAMINANTS FOUND IN SEVERAL OTHER INJECTORS. THE CONTAMINANTS APPEARED TO BE FLAKES FROM THE INSIDE OF AIR BLEED HOSES TO THE INJECTOR NOZZLES. THE HOSES ARE HARDENED BY HEAT AND SHOW CRACKING; THEY ARE CHIPPED WHERE THEY SLIDE ONTO THE NOZZLE TUBES. WE INSTALLED NEW HOSES. PERHAPS HOSE P/N LW-18737 SHOULD BE REPLACED AT 500 HOUR INTERVALS.

CA081107003	CESSNA	CONT	SEAT TRACK	CRACKED
11/3/2008	182J	O470R	MC07106582	LT PILOTS/LTPAS

(CAN) 3 CRACKS LT PAS RAIL, 1 CRACK LT PILOTS RAIL, SEAT RAILS SOME WEAR, WEAR WITHIN LIMITS.

OMKR2008-0003	CESSNA		NONE	NONE
11/24/2008	208B			

NEW ACFT FROM FACTORY. PERFORMED AD SEARCH DUE TO EXPORT REQUIREMENT DURING ANNUAL. FOUND NUMEROUS ADS SIGNED OFF AS COMPLIED WITH THAT WERE N/A TO ACFT. MANY LISTED PARTS THAT WERE SUPPOSEDLY CHANGED. CONTACTED CESSNA. WAS ASKED WHY WITH SO MANY NEW ACFT BEING RELEASED, NO ONE ELSE WAS COMPLAINING. AFTER SEVERAL PHONE CONVERSATIONS AND SEVERAL CORRECTED LISTS, FINALLY HAD AN ACCEPTABLE LIST. 2 ADS WERE NOT ACCOUNTED FOR AND HAD BEEN ISSUED PRIOR TO THE ACFT BORN-ON DATE. STRAIGHT FLIGHT PMI BROUGHT INTO THE LOOP AND WANTED A SDR SUBMITTED. HE IS ALSO WORKING. EXPECT SERIES OF THESE CARAVANS TO HAVE SAME PROBLEM. THESE ACFT ARE NOT AIRWORTHY WITH FALSE AD LISTS.

2008FA0000866	CESSNA	PWA	MOUNT	CRACKED
11/17/2008	208B	PT6A114	26510088	ENGINE

THE CENTER ENGINE MOUNT BRACKET WAS FOUND TO HAVE CRACKS INSIDE THE ASSY AT THE TERMINATION END OF BOTH WELDS. (K)

2008FA0000867	CESSNA	PWA	MOUNT	CRACKED
11/17/2008	208B	PT6A114	26510127	LT ENGINE

THE LT ENGINE MOUNT BRACKET WAS FOUND TO HAVE CRACKS INSIDE THE ASSY AT THE TERMINATION END OF BOTH WELDS. (K)

CA080314010	CESSNA	PWA	TUBE	FLAT
3/6/2008	208B	PT6A114A	G195X6758	TIRE

(CAN) TIRE WENT FLAT SITTING IN HANGAR. CRACK FOUND IN TUBE AT BASE OF VALVE STEM.

CA081125007	CESSNA	PWA	ENGINE	VIBRATION
11/4/2008	208B	PT6A114A		

(CAN) AT FL100 IN STEADY STATE, THE PILOT HEARD A STRONG NOISE COMING FROM THE ENG AND THE INSTRUMENTS INDICATED TEMP AT 800°C, NG AT 100 PERCENT AND TORQUE AT 2000 FT-LB. THE POWER LEVER WAS RETARDED AND PARAMETERS CAME BACK TO (NORMAL). THE FLIGHT CONTINUED AND DURING FINAL APPROACH, THE POWER REDUCED TO IDLE UNCOMMANDED AND THE ENG STOPPED RESPONDING TO POWER LEVER INPUTS. THE PILOT WAS ABLE TO LAND SAFELY WITH IDLE POWER. ONCE ON THE GROUND, THE COWLING WAS OPENED AND SMOKE WAS OBSERVED COMING OUT OF THE ENGINE. THE ENG WILL BE REMOVED AND FWD FOR INVESTIGATION. UPDATES WILL BE PROVIDED TO TC.

CA081103004	CESSNA	PWA	BEARING	FAILED
10/8/2008	208B	PT6A114A	310186401	ACCESSORY G/B

(CAN) NR 1 BRG FAILED WITHOUT OUTSIDE INFLUENCE. RESULTANT METAL CONTAMINATION CONTAINED TO THE GB, MAIN OIL FILTER AND OIL PUMP.

2008FA0000851	CESSNA		WARNING SYSTEM	MALFUNCTIONED
10/23/2008	210N		12707332	LANDING GEAR

WHILE FLYING THROUGH RAIN IN IFR CONDITIONS, THE LANDING GEAR NOT DOWN/LOCKED WARNING HORN

SOUNDED FALSELY EVEN THOUGH THROTTLE WAS NOT RETARDED TO DESCENT CONFIGURATION. AIRCREW PULLED WARNING HORN CIRCUIT BREAKER TO TEMPORARILY CANCEL THE HORN WHICH ALSO DEACTIVATES THE NORMAL FUNCTION OF THE STALL/GEAR WARNING SYSTEM. THE HORN IS VERY LOUD INTERFERING WITH ATC COMMUNICATIONS DURING A CRITICAL PHASE OF FLIGHT. TROUBLESHOOTING REVEALED THE THROTTLE SWITCH INPUT ON THE DUAL WARNING UNIT IS HYPERSENSITIVE TO A HIGH RESISTANCE GROUND, I.E. MOISTURE ACCUMULATION AT THE THROTTLE SWITCH TERMINAL.

CA081002001	CESSNA	CONT	SWITCH	INTERMITTENT
10/2/2008	340A	TSIO520NB	SA24SDX111	MLG

(CAN) LANDING GEAR INTERMITTENTLY WOULD NOT RETRACT. FOUND ANNUNCIATOR PRESS TO TEST SWITCH INTERMITTENT.

CA081002003	CESSNA	CONT	TURBINE WHEEL	SEIZED
9/29/2008	340CESSNA	TSIO520C	407809001	TURBOCHARGER

(CAN) TURBINE WHEEL SEIZED. TURBOCHARGER REMOVED, OVERHAULED TURBOCHARGER INSTALLED.

CA080930006	CESSNA	CONT	WHEEL	CRACKED
7/23/2008	401	TSIO520E	4040A	MLG

(CAN) RT MAIN WHEEL ASSY BEAD AREA FOUND CRACKED. WHEEL REPLACED WITH SERVICEABLE UNIT.

2008FA0000859	CESSNA		SUPPORT	CRACKED
11/13/2008	414A			TRUNNION

ON THE FWD TRUNNION SUPPORT, A CRACK WAS LOCATED ON THE LT AND RT SIDES. EDDY CURRENT INSP USED. (K)

CA081205007	CESSNA	CONT	LINE	CORRODED
12/4/2008	414A	TSIO520NB	5100106377	VACUUM SYS

(CAN) UPON REACHING CRUISE FLIGHT AND ACTIVATING AIRFRAME PNEUMATIC DE-ICE SYSTEM, THE BOOTS WOULD REMAIN PARTIALLY TO MOSTLY INFLATED. THIS PROBLEM WOULD NOT DUPLICATE ON A GROUND RUN. THE VACUUM LINE TO THE FLOW VALVES WAS INSPECTED AND A LINE ASSEMBLY TO THE TAIL FLOW VALVE WAS FOUND CORRODED WHERE IT PASSED OVER AN ENVIRONMENTAL DUCT AT APPROX. MID CABIN. THE LINE ASSEMBLY WAS REPAIRED. THE ACFT WAS GROUND RUN AND FLOWN TO CRUISE ALTITUDE TO MAX. CABIN PRESSURE DIFFERENTIAL, AND THE PNEUMATIC DE-ICE SYSTEM FUNCTIONED PROPERLY.

CA081212002	CESSNA	CONT	BEARING	FAILED
12/5/2008	421B	GTSIO520H		ALTERNATOR

(CAN) IN CRUISE PILOT NOTICED SPARKS COMING FROM RT ENGINE. UPON EXAMINATION ON GROUND BY MX, ALTERNATOR OUTER BRG. FAILED. SHAFT DEFORMED FROM HEAT. FAILURE OF CRANKSHAFT ALTERNATOR DRIVE GEAR CAUSED MAJOR INTERNAL ENGINE DAMAGE.

CA080123003	CESSNA	PWA	TUBE	DAMAGED
1/23/2008	425	PT6A112	0923150	NLG TIRE

(CAN) THE FLAT WAS DISCOVERED UPON LANDING AND THE A/C WAS SHUTDOWN BECAUSE IT WAS UNABLE TO TAXI. THE FENDER AND THE WHEEL WERE REPLACED. UPON INSP OF THE FLAT TIRE IT WAS DISCOVERED THAT THE INNER TUBE WAS SPLIT ALONG THE SEAM, THERE WAS NO ISSUES OR HOLES IN THE TIRE AND THE ASSY WAS ASSEMBLED CORRECTLY.

CA080215013	CESSNA	PWA	CESSNA	LINE	WORN
2/7/2008	425	PT6A112		S51812	BLADDER VENT

(CAN) LT AND RT NACELLE FUEL BLADERS WERE FOUND COLLAPSED. GROUND HANDLER REPORTED AIR RUSHING INTO TANK AFTER FILLER CAP REMOVAL WHILE PREPARING TO FUEL ACFT. FUEL VENT LINES WITHIN INTEGERAL WING TANK WERE FOUND TO HAVE HARD/BRITTLE RUBBER COUPLER HOSES WHICH LEAKED FUEL INTO THE VENT SYS AND WAS TRAPPED IN A LOW SYS IN THE VENT LINES CAUSING BLOCKED VENT LINES AND COLLAPSING THE BLADDER TANKS DURING FLIGHT. RUBBERS REPLACED AND SYS OPS NORMAL.

2008FA0000887	CESSNA		AUTOPILOT SYS	MALFUNCTIONED
10/28/2008	510		GFC700	

WHEN A DISCREPENCY BETWEEN THE NAVDATA DATABASE & ACTUAL IMPLEMENTATION OF A LOCALIZER NAVAID, GFC700 WILL NOT INTERCEPT & TRACK LOCALIZER SIGNAL CORRECTLY. IT EITHER FLIES THROUGH COURSE OR WILL ACTIVATE LOC MODE & IMMEDIATELY TURN OFF COURSE. AFCS APPEARS TO REFERENCE LOCALIZER COURSE FROM DATABASE RATHER THAN SELECTED COURSE ON HSI. FIRST DISCOVERED ON ASE LOC DME A APPROACH LAST APRIL. NAVDATA HAD INCORRECT COURSE OF 120 FOR I-PKN LOCALIZER. I-PKN TUNED, HSI WOULD AUTO-SET COURSE TO 120. THE PILOT CAN TURN THE NEEDLE TO THE CORRECT COURSE OF 300, AND THE HSI WILL PROVIDE CORRECT SENSING. AUTOPILOT WILL NOT CAPTURE THAT COURSE & WILL FLY RIGHT THROUGH LOCALIZER TOWARD TERRAIN. MANUFACTURERS AND FAA/NFDC WERE NOTIFIED, & NFDC CORRECTED ENTRY IN LOCALIZER DATABASE. NEXT DISCOVERED ON EUG ILS 16R APPROACH. FREQUENCY FOR LOCALIZER RECENTLY CHANGED TO 110.1 WITH NEW FREQUENCY PUBLISHED BY NOTAM. TUNING 110.1, HSI AUTO-SETS COURSE WESTWARD. PILOT CAN MANUALLY SET HSI COURSE TO 160 TO GET CORRECT SENSING. ATTEMPTING TO INTERCEPT COURSE FROM NORTHEAST, AFCS WILL ENTER LOC MODE & THEN TURN WEST. WHEN ATTEMPTING TO INTERCEPT FROM NORTHWEST, THE AFCS WILL FLY THROUGH LOCALIZER COURSE.

2008FA0000877	CESSNA	PWC	GROUND STUD	LOOSE
11/20/2008	510	PW615FA		RT WING

ADJACENT TO RT WING ACCESS PANEL 623DB THERE IS A GROUNDING POINT TO GROUND THE ACFT DURING FUELING OR WHILE PERFORMING MAINTENANCE. IN AN ATTEMPT TO GROUND TO ACFT IN ORDER TO PERFORM MAINT, WE FOUND THE GROUNDING JACK MISSING. PANEL 632DB WAS REMOVED AND UPON FURTHER INSP THE PARTS WERE FOUND FLOATING AROUND INSIDE THIS AY WHICH ALSO HOUSES THE AILERON CONTROL SECTOR. SOME TYPE OF SAFETY SHOULD BE INCLUDED ON GROUNDING JACK TO PREVENT IT FROM COMING APART AND POTENTIALLY JAMMING THE AILERON. (K)

CA080207003	CESSNA	WILINT	CONVERTER	INOPERATIVE
9/20/2007	525	FJ44	RR18	

(CAN) MFD FAIL TO COME ON WHEN ACFT MASTER SWITCH TURNED ON. DC-DC CONVERTER REPLACED - SAME PROBLEM OCCURED AT 102.6 AIRFRAME HRS. - 66 AIRFRAME CYLES, AND DC-DC CONVERTER REPLACED AGAIN (33 HRS + 19 CYCLES) MFG IS AWARE OF THE POOR QUALITY OF THE RR18 DC-DC CONVERTERS.

2008FA0000876	CESSNA		BRAKE CABLE	FAILED
11/17/2008	525B		6364106	LT BRAKE

LET ACFT SIT OVER NIGHT WITH PARKING BRAKE APPLIED AND FOUND BRAKE SYS TO STILL HAVE 700 PSI IN BRAKE SYS. RELEASED PARKING BRAKE AND FOUND THAT THE LT BRAKE STILL HAD 160 PSI RESIDUAL PRESSURE AND RT SIDE HAD ZERO RESIDUAL PRESSURE. VERIFIED RT WHEEL ASSY WOULD ROTATE, CHECK LT SIDE AND LT WHEEL ASSY WOULD NOT ROTATE. INSPECTED INSIDE PORTION OF BRAKE METERING VALVE IN CABIN AND NOTICED THAT THE LT ACTUATION CABLE CLEVIS END COULD GET HOOKED ON EDGE OF CABLE BALL END. WHEN THAT HAPPENS 160 PSI REMAINS ON LT BRAKE. WHEN CABLE IS POSITIONED PROPERLY LT BRAKE HAS NO RESIDUAL PRESSURE ON GAUGE AND LT WHEEL ROTATES. OBTAINED NEW AFT BRAKE CABLES FROM MFG AND MODIFIED IAW ENGINEERING CO NR 525-1495. REMOVED ORIGINAL CABLES AND INSTALLED NEW MODIFIED CABLES IAW MM. COMPLIED WITH AN OPS CHECK OF BRAKE SYS AFTER ALL WORK WAS DONE. OPS CHECK GOOD. (K)

CA080211002	CESSNA	PWA	ROLLER	OUT OF ADJUST
2/5/2008	550	JT15D4	552500079	CENTER FLAP AFT

(CAN) CAMPAIGN NOTICE 851-27-50-043, FLAP CTR AFT BEARING INSTALLATION, COMPLIED WITH. NO FAULTS FOUND ON LT FLAP INSTALLATION. RT FLAP AFT CENTER ROLLER BEARING FOUND TIGHT, BEARING WOULD NOT TURN UNLESS FLAP WAS HELD WITH PRESSURE APPLIED. NO DAMAGE TO BEARING OR SUPPORT FOUND. AFT CENTER ROLLER BOLT ADJUSTED IAW MM 27-51-04, PG 208 PARA B-5-B(2). WORK DOCUMENTED ON ASD-MP-01 REPORT NR859-02/04/08.

CA080124015	CESSNA	PWA	BEARING	MISSING
1/23/2008	550	JT15D4	55250007983	TE FLAP

(CAN) ACFT ARRIVED AT OUR FACILITY FOR PAINT. UPON DISASSEMBLY MX NOTED THE BOLT SECURING THE RT FLAP CENTRE AFT ROLLER WAS LOOSE. FURTHER INVESTIGATION AND REMOVAL DETERMINED THAT THE BEARING AND SHIM REQUIRED TO BE UNDER THE HEAD OF BOLT WAS MISSING AND PROBABLY NOT INSTALLED THE LAST TIME MX WAS DONE IN THAT AREA.

CA080212003	CESSNA	PWA	SUPPORT	WORN
2/1/2008	550	JT15D4	55250007	TE FLAP

(CAN) DURING A CAMPAIGN NOTICE OF THE RT FLAP CENTER BRG INSTALLATION, BOTH OF THE AFT FLAP BEARINGS WERE FOUND LOOSE AND WORN DUE TO THE LOCATING PIN ON THE BEARINGS NOT INSTALLED INTO MATING HOLES OF FLAP RIB EXTENSIONS. FLAP ROLLER PN KJS 112603 AND BOTH CENTER AFT FLAP ROLLER SUPPORT BRGS P/N 5525000-79 WERE REPLACED.FLAPS FUNCTION CHECK SERVICEABLE AND ACFT RETURNED TO SERVICE.

CA081105009	CESSNA	PWA	ENGINE	FLAMED OUT
11/1/2008	550	PW530A		NR 2

(CAN) DURING CRUISE AT FL270, THE PILOT NOTICED A POWER ROLL BACK ON NR 2 ENGINE. HE IMMEDIATELY DIVERTED THE ACFT TO AN ALTERNATE AIRPORT. THE ENGINE THEN FLAMED OUT AND THE PILOT MADE A SINGLE ENGINE LANDING. THE FUEL CONTROL WAS REPLACED AND THE ACFT RELEASED TO SERVICE. MANUFACTURER WILL CONTINUE INVESTIGATING THE EVENT AND ADVISE OF ROOT CAUSE ONCE ESTABLISHED.

2008FA0000864	CESSNA		ACTUATOR	LEAKING
11/8/2008	560CESSNA		15232003	NLG

ON NOV 6, THE ACFT EXPERIENCED FOR THE THIRD TIME, LANDING GEAR RETRACTION PROBLEMS. IT WAS FLOWN TO REPAIR STATION FOR LANDING GEAR MAINTENANCE. THE ACFT WAS JACKED, AND A GEAR RETRACT CHECK WAS ABLE TO DUPLICATE THE INFLIGHT PROBLEM. TROUBLESHOOTING REVEALED THAT THE NOSE GEAR ACTUATOR WAS LEAKING INTERNALLY, FILLING THE NITROGEN EMERGENCY EXTENSION SYSTEM WITH HYD FLUID. THIS RESULTED IN A HYDRAULIC LOCK DURING THE NORMAL LANDING GEAR RETRACTION CYCLE, THUS PREVENTING ONE OR MORE MAIN LANDING GEAR FROM ACHIEVING AN UP AND LOCKED POSITION. APPROX 1.5 PINTS OF HYD FLUID WERE DRAINED FROM THE EMERGENCY EXTENSION LINES AND COMPONENTS. ADDITIONALLY, THE EMERGENCY EXTENSION BREATHER CHECK VALVE PN P48-389 HAD FAILED TO VENT EXCESS PRESSURE OVERBOARD. NOSE ACTUATOR WAS REMOVED ON 27 FEB 2006 AND RESEALED DUE TO LEAKING BY MFG AND REINSTALLED BACK ONTO ACFT. ACTUATOR ACCUMULATED 954 CYCLES AND 1019.2 HRS OF OPERATION SINCE REPAIR. (K)

CA081125006	CESSNA	PWA	ENGINE	FLAMED OUT
11/11/2008	560CESSNA	JT15D5		

(CAN) DURING SHORT FINAL, UPON REDUCING THE POWER TO IDLE, THE ENGINE FLAMED OUT. THE EVENT OCCURRED AT AN ALTITUDE OF APPROX. 100 FEET AND THE CREW LANDED THE ACFT SINGLE ENGINE. NOV. 12 2008: ENGINE FLAME-OUT EVENT OCCURRED WHILE DEPLOYING THE THRUST REVERSERS DURING LANDING ROLLOUT. THIS IS THE SECOND EVENT IN 2 DAYS ON THE SAME ENGINE. TROUBLESHOOTING IS ON-GOING WITH THE HELP OF MFG`S.

CA080929003	CESSNA	PWA	FUEL CONTROL	FAILED
9/18/2008	560XL	PW545A	8237002	ENGINE

(CAN) ON DESCENT THROUGH 12000 FT, THE ENGINE EEC WARNING ACTIVATED, OIL PRESSURE DROPPED AND ENGINE SPOOLED DOWN TO 0. APPROACH REJECTED AND EMERGENCY DECLARED, ACFT DIVERTED. TROUBLESHOOTING CARRIED OUT, AS REQUESTED BY MFG, FUEL IS NOT PASSING THROUGH THE FCU, UNIT REMOVED FOR REPAIR/OVERHAUL, A REPLACEMENT UNIT HAS BEEN ORDERED.

CA080207004	CESSNA	PWC	PLUG	LEAKING
10/5/2007	560XL	PW545B	49290	RT WHEEL

(CAN) TIRE/WHEEL ASSY LOOSING AIR PRESSURE. SL560XL32-19 PROVIDES IMPROVED THERMAC PLUG. PIN 542-7 WHICH WAS TO BE INSTALLED IN THIS SERIAL NR ACFT AND WHEEL S/N- THE OLD PIN 49-290 PLUG IS MAGNETIC. THE NEW PIN 542-7 IS NO MAGNETIC. CHECKING OF NEW SPARE WHEEL AND BOTH ACFT MAIN WHEELS FOUND OLD PIN PLUGS INSTALLED.

CA080207001	CESSNA	PWC	ACTUATOR VALVE	STICKING
12/14/2007	560XL	PW545B	IE502	HEAT EXCHANGER

(CAN) RT BLEED AIR OVERTEMP WARNING LITE CAME ON DURING T/O. TWICE IN 42 T/O. THE HEAT EXCHANGER VALVE WAS STICKING IN CLOSED POSITION - VALVE ACTUATOR PIN IE50-2 WAS REPLACED.

CA080207002	CESSNA	PWC	ACTUATOR	LEAKING
12/14/2007	560XL	PW545B	64ND782047	THRUST REVERSER

(CAN) LT THRUST REVERSER INBD ACTUATOR. WEEPING HYDRAULIC FLUID. NOTE: THIS ACTUATOR WEEPED FLUID FROM DAY ONE ON 560 S/N 0648 HAD 2 ACTUATORS I/B LT REPLACED FOR HYDRAULIC FLUID LEAKS OVER APPROX 1800 HRS.

CA081028001	CESSNA	PWC	CIRCUIT BREAKER	TRIPPED
10/1/2008	680CE	PW306C	70002405D	LT POWER FEED

(CAN) LT POWER FEED CIRCUIT BREAKER (1 OF 3 IN PARALLEL) POPS OPEN IN FLIGHT. P/N 700-024-50 REPLACED NEW. NOTE: THIS C/B WAS REPLACED AT 261 HRS. AND AGAIN AT 342 HRS.

CA080213007	CESSNA	PWC	HOSE	LEAKING
1/31/2008	680CE	PW306C	SEEDESCRIPTION	HYD SYS

(CAN) DURING INSP OF FLAP SYS FOUND 6 HYD HOSES FOR SPEED-BRAKE/LIFT-DUMP ACTUATORS WITH MINOR HYD FLUID SEEPAGE. THE FOLLOWING PN HOSES WERE REPLACED. AE1011925E0087, AE1011925E0094, AE1011925E0121, AE1011888E0132, AE1011924E0103, AE1011933E0086.

CA080225010	CESSNA	CONT	CONTROL CABLE	FRAYED
2/4/2008	A185E	IO520D	0510105125	ELEVATOR

(CAN) LWR ELEVATOR CABLE FRAYED AT BULKHEAD STA140 AT PHENOLIC BLOCK.

CA080225011	CESSNA	CONT	CONTROL CABLE	FRAYED
2/11/2008	A185E	IO520D	0510105125	ELEVATOR

(CAN) LWR ELEVATOR CABLE FRAYED AT BULKHEAD STA 140 AT THE PHENOLIC BLOCK.

CA080930004	CESSNA	CONT	YOKE	CORRODED
9/29/2008	A185E	IO520D	05117821	ELEV CONTROL

(CAN) ASSEMBLY WAS FOUND CORRODED WHEN INSPECTED IAW SEB01-3.

CA080930005	CESSNA	CONT	BRACKET	BROKEN
9/29/2008	A185F	IO520D	0512128	FLAP PULLEY

(CAN) LT FLAPS HAVE EXCESSIVE PLAY WHEN DEPLOYED. SYSTEM INVESTIGATED AND LT SIDE FLAP PULLEY BRACKET FOUND BROKEN.

CA081125004	CESSNA	CONT	ENGINE	MAKING METAL
11/12/2008	R172K	IO360KB	IO360KB	

(CAN) LOSS OF OIL PRESSURE DURING FLIGHT. PRECAUTIONARY LANDING ON NEARBY LAKE. INSP REVEALED HEAVY METAL CONTAMINATION IN OIL SCREEN, POSSIBLY CRANKSHAFT BEARING.

CA080218003	CESSNA	LYC	INDICATOR	MISINSTALLED
2/18/2008	T206H	TIO540AJ1A	30A01002203202	MLG FLOAT

(CAN) IT WAS FOUND DURING AN INSP OF THE FLOATS THAT THE MLG INDICATOR COVERS COULD BE INSTALLED ON THE WRONG FLOAT. IF INSTALLED INCORRECTLY THE GEAR INDICATION IS REVERSED.

OMKR2008-0002	CESSNA	LYC	UNKNOWN	UNKNOWN
11/24/2008	T206H	TIO540AJ1A		

NEW AIRCRAFT FROM FACTORY. PERFORMED AD SEARCH DUE TO EXPORT REQUIREMENT DURING ANNUAL. FOUND CESSNA SUPPLIED AD LIST DID NOT MATCH LYCOMING SUPPLIED LIST, AND CESSNA HAD CHANGED 8 AD SIGN-OFFS FROM LYCOMING. CESSNA CONTACTED, AND SAID THEY HAD TO CHANGE LYCOMING'S LIST BECAUSE IT WAS IN ERROR. LYCOMING CONTACTED WITH NO REPLY YET. STRAIGHT FLIGHT PMI BROUGHT INTO LOOP, AND WANTED SDR FILLED OUT. PMI WILL ALSO ACTION. VERY SERIOUS IN NATURE AS LYCOMING SAYS THEY CHANGED NUMEROUS PARTS FOR AD COMPLIANCE, INCLUDING THE CRANKSHAFT, WHEN THESE AD'S DO NOT APPLY IN THE FIRST PLACE. SUSPECT YOU WILL FIND LARGE RUN OF LYCOMING ENGINES WITH THIS SAME PROBLEM. THESE ENGINES ARE NOT AIRWORTHY WITH FALSE AD LISTS.

CA081002002	CESSNA	LYC	PISTON	SEPARATED
10/2/2008	T206H	TIO540AJ1A	1002573	MLG

(CAN) RT MLG FAILED TO RETRACT. FOUND HYDRAULIC CYLINDER PISTON HAD SEPARATED FROM CYLINDER RAM.

2008FA0000853	CESSNA		ALTERNATOR	SHORTED
11/30/2008	T303		ASG120001	ENGINE

HAVE HAD MULTIPLE FAILURES, BOTH IN FLIGHT AND DURING MAINTENANCE GROUND OPERATIONS. HOURS ON FAILED ALTERNATORS RANGE FROM AS LOW AS 30 TO A MAXIMUM OF 220 HOURS TIME IN SERVICE. THE ONE COMMON FACTOR IN ALL FAILURES HAS BEEN THE DISCOVERY OF LOOSE HEX HEAD CASE BOLTS INSTALLED AND SAFETY WIRED BY MANUFACTURER. THIS PROBLEM IS NOT RESTRICTED TO ONE SIDE ONLY, BOTH ENGINES DRIVE THE SAME ALTERNATOR WITH SAME PART NUMBER.

CA081001003	CESSNA	CONT	SKIN	CRACKED
9/19/2008	U206G	IO520F	122005211	AILERON

(CAN) AT INSPECTION THE LT AILERON OTBD HINGE ASSY WAS FOUND CRACKED. THE CRACKS WERE LOCATED AT THE BEND RADIUS OF THE LOWER AFT ATTACH ANGLES.

CA080921001	CESSNA	CONT	BOLT	CRACKED
9/19/2008	U206G	IO520F	AN17621A	NLG

(CAN) DURING ROUTINE MX AND ENGINE CHANGE, NLG WAS REMOVED FOR ACCESS TO REPLACE LOOSE RIVETS IN ENG NACELLE AREA. INSP OF NLG ATTACH BOLTS SHOWED SIGNS OF CRACKS JUST UNDER THE HEAD OF THE BOLT. LPI INSP OF THE BOLT SHANKS CONFIRMED CRACKS. BOLTS WERE BOTH REPLACED. AFTT 12484.6 HOURS, A REVIEW OF ACFT HISTORY FOUND NO RECORD OF THESE BOLTS HAVING BEEN REPLACED. A REVIEW OF THE MFG SERIES CAP, CONTINUED AIRWORTHINESS PROGRAM, SHOWED NO INITIAL INSP OR REPLACEMENT REQUIREMENTS.

CA081105011	CNDAIR	PWA	PISTON	CRACKED
9/24/2008	CL2151A10	CWASP	33130131	ACTUATOR

(CAN) DURING ANNUAL INSP, WATER DOOR UNLATCHING JACKS WERE REMOVED FOR INSPECTION. THE PISTONS OF THE JACKS WERE INSPECTED USING LIQUID PENETRANT INSPECTION FOR PRECAUTIONARY REASONS. BOTH PISTONS OF THE ACTUATORS WERE FOUND TO HAVE INDICATIONS SHOWING THERE WERE CRACKS. BOTH SHAFTS WERE SENT TO OUR AMO`S NDT COMPANY FOR MAGNETIC PARTICLE INSPECTION TESTING TO VERIFY THE CRACKS. CRACKS WERE VERIFIED. SERVICE BULLETIN 215-528 WAS CREATED TO ELIMINATE THE POSSIBILITY OF THE PISTONS CRACKING. BOTH OF THESE ACTUATORS HAD BEEN THROUGH OUR OVERHAUL SHOP. ONE ACTUATOR WAS REPAIRED, THE OTHER WAS OVERHAULED. IN BOTH CASES, THE ACTUATORS HAD NEW PISTONS INSTALLED AND ACCUMULATED.

CA081106007	CNDAIR	GE	POWER UNIT	BURNED
11/3/2008	CL600*	CF348C5	671GA01Y00	APU

(CAN) NOT ACCEPTING AC EXTERNAL OR APU GEN AC. MX DETECT A BURNED CONTACTOR. CURRENTLY ACFT EXTERNAL AVAILABLE LIGHT IS ON. ACFT ONLY MAINTAINS POWER FOR 3 SECONDS, AND KICKS OFF. MFG HAS ISSUED A CONCESSION SL STATING NO OBJECTION TO FERRY PROVIDED THE FOLLOWING MTC PROCEDURES BE ACCOMPLISHED. DISCONNECT CONNECTORS K119-S4 AND K119-S3 2. CAP AND STOW CONNECTORS K119-S4 AND K119-S3 IAW EEC/SPM 20-12-05 3. APU GENERATOR IS INHIBITED IAW MEL 24-22-01 4. EXTERNAL ACFT POWER SYS IS INHIBITED IAW MEL 24-41-03 FROM A FLT OPS PERSPECTIVE, FOR ENGINE START. START ENG IAW

QRH SUPP-2 ENGINE START (BATTERY/EXTERNAL AIR) PROCEDURE.

CA081027004	CNDAIR	GE	BRACKET	LOOSE
10/24/2008	CL600*	CF348C5	491184	RT MLG DOOR

(CAN) INBD MLG RT DOOR ATTACHMENT BRACKET ON STRUT FOUND LOOSE DURING HEAVY MAINT VISIT. REFERENCE: CMM 32-11-05, FIGURE 1, PAGE 1019, ITEM 290. IT IS WORTH NOTING THAT THIS IS THE 2ND TIME, IN THE MONTH OF OCTOBER 2008, THAT THIS ISSUE HAS BEEN RAISED. PREVIOUSLY, A MAINT IRREGULARITY REPORT SUBMITTAL, DATED 03 OCTOBER 2008, REVEALED THAT THE SAME PROBLEM WAS FOUND. NO SDR RAISED FOR THIS ONE.

CA081105012	CNDAIR		TRANSMITTER	MALFUNCTIONED
10/20/2008	CL6002B19		601R930303	

(CAN) UPON REACHING FL280 (CRUISING ALT) THE FLT CREW REPORTED THAT THEY RECEIVED THE SAME INDICATIONS ON EICAS AS THEY WOULD HAVE RECEIVED ON APPROACH (BRAKE TEMP, GEAR ICONS AND FLAP INDICATOR AND SPEED RASTER MOVING DOWN TO 210 KTS) AND THAT DURING THESE INDICATIONS, ACFT WITH AUTOPILOT ENGAGED STARTED TO PORPOSE UP AND DOWN +/- 50 TO 100 FT. THE FLAP DEGRADED (S) MSG WAS POSTED AS WELL. DURING THESE ALTITUDE FLUCTUATIONS, F/A WAS ASKED TO VERIFY WHETHER FLAPS WERE MOVING. SHE INDICATED TO CREW THAT THE FLAPS WERE NOT MOVING. ATC WAS NOTIFIED AND ACFT DIVERTED. JUST BEFORE THE FLT CREW STARTED THEIR DEVIATION, THE ACFT NOSED OVER BRIEFLY WITH ABOUT A 500 FT LOSS IN ALTITUDE BUT INSTANTLY RECOVERED BACK TO FL280. THIS WAS THE LAST OCCURRENCE DURING THIS FLIGHT. THE ACFT CONTINUED ON AND LANDED WITHOUT FURTHER INCIDENT. FDR WILL BE FORWARDED FOR ANALYSIS.

CA081122006	CNDAIR		WINDOW	CRACKED
11/10/2008	CL6002B19		NP13922001	COCKPIT

(CAN) F/O SIDE WINDOW IS CRACKED. INNER PLY. ALSO SMALL SLIVER FROM RT WINDOW HAS CHIPPED OFF APPROX 2 INCHES BY .25 INCH AT THE WINDOW EDGE. CALLED TO VERIFY THE CRACKED PLY. ACFT TO FERRY UNPRESSURIZED FOR REPAIRS".

CA081122002	CNDAIR		ACTUATOR	FAILED
11/17/2008	CL6002B19		852D10021	TE FLAPS

(CAN) FLAP FAIL IN APPROACH WHEN SELECTED FROM 0 DEGREE. FLAP FAILED AT 0 DEGREE.

CA081122003	CNDAIR		FLAP SYSTEM	FAILED
11/17/2008	CL6002B19			TE FLAPS

(CAN) DECENDING THROUGHT 10,000 FT, FLT CREW REPORTED FLAP FAIL MSG WITH FLAPS AT 0 DEG, AIRSPEED WAS 250 KTS. QRH FOLLOWED AND ACFT LANDED WITHOUT FURTHER INCIDENT. COMPLIED WITH FLAP RESET IAW SUPPLEMENT 98-018B (CB RESET) AND FLAPS OPS CHECKED NORMAL. ACFT RETURNED TO SERVICE.

CA081121002	CNDAIR	GE	CONTROL UNIT	FAILED
11/20/2008	CL6002B19	CF343A1	855D1009	TE FLAPS

(CAN) DURING PUSH BACK FROM THE GATE, FLAP LEVER WAS MOVED TO 8 DEGREES BY THE FLIGHT CREW BUT THE FLAP DIDN`T EXTEND AND "FLAP FAIL" CAUTION MESSAGE APPEARED ON THE ENGINE INDICATION AND CREW ALERTING SYS (EICAS). THE ACFT WAS TOWED BACK TO THE GATE. FLAP ELECTRONIC CONTROL UNIT (FECU) FAULT CODES WERE RETRIEVED AND DECISION WAS MADE TO REPLACE THE RT BRAKE POSITION SENSOR UNIT (BPSU). THE UNIT WAS REPLACED AND THE ACFT RETURNED INTO SERVICE.

CA081111001	CNDAIR	GE	BYPASS VALVE	STUCK
11/7/2008	CL6002B19	CF343A1	8084402	NR 1 ACM

(CAN) ON TAXI IN, CREW NOTICED ONE OF THEIR AIR-CONDITIONING PACKS WAS OVER TEMPING. THEY WHERE NOT ABLE TO CONTROL IT, SOON NOTICED SMOKE ON FLIGHT DECK. F/A WAS NOTIFIED AND A RAPID DEPLANEMENT WAS CONDUCTED AT GATE. MX FOUND THE DUAL BYPASS VALVE STUCK IN THE FULL HOT POSITION. NR 1 ACM WAS ALSO FOUND SEIZED (P/N 782790-15, S/N 930930. TSN 28517 HOURS, CYCLES 14277, TSO 878735). IN ADDITION COMPRESSOR OUTLET OVERTEMP SWITCHES (P/N 750659-16. RATED TO 415°F) WERE

FOUND INSTALLED IN THE LT AND RT DUCT OVERTEMP SWITCH POSITIONS INSTEAD OF (P/N 750665-9. RATED TO 220°F). THIS WAS REPORTED TO COMPANY MX SAFETY DEPT. BYPASS VALVE, NR 1 ACM AND THE SWITCHES WERE REPLACED, FUNCTION CHECKED SERVICEABLE AND THE ACFT RETURNED TO SERVICE.

CA081111004	CNDAIR	GE	CONTROL UNIT	MALFUNCTIONED
11/10/2008	CL6002B19	CF343A1		TE FLAPS

(CAN) FLAPS SELECTED TO 20 DEGREES FOR TAKE-OFF. AFTER TAKE-OFF, FLAPS WERE SELECTED TO 8 DEGREES AND THE FLAPS LOCKED AT 20 DEGREES. FLAP FAIL CAUTION EICAS MSG AS WELL. FOUND SKEW DETECT FAULT LIGHTS ILLUMINATED, BOX RESET CARRIED OUT ALONG WITH BREAKER RESET. FLAPS CYCLED NUMEROUS TIMES WITHOUT FAILURE.

CA081113005	CNDAIR	GE	DETECTION SYS	FAILED
11/12/2008	CL6002B19	CF343B1	8004301	FLAP SYSTEM

(CAN) FLAP FAIL, SELECTED 20, FAILED AT 8 DEGREES. ON APPROACH, CREW UNAWARE OF OAT DUE TO WORK LOAD. FLAP SKEW DETECTION UNIT REPLACED IAW AMM 27-51-15, PG 401. FLAPS CHECKED SERVICEABLE.

CA081117002	CNDAIR	GE	DRIVE SYSTEM	FAILED
11/14/2008	CL6002B19	CF343B1	865D1007	TE FLAPS

(CAN) FLAP FAIL MESSAGE AFTER SELECTING FLAP, FLAPS FAILED AT 8 DEGREES. ACFT LANDED SAFELY WITH FLAPS AT 8 DEGREES. REPLACED PDU, COMPLETED FLAP TORQUE CHECK, CHECKED FOR ACTUATOR OVER TEMP IAW AMM 27-52-01-000-8001 AND AMM 27-53-00-750-802. FLAP SYS CHECKS SERVICEABLE.

CA081111002	CNDAIR	GE	FIRE WARNING	ILLUMINATED
10/28/2008	CL6002B19	CF343B1		

EXPERIENCED AN EMERGENCY EVACUATION A/P ON TAXIWAY (M), DUE SMALL FIRE EMITTING FROM ENG WHILE TAXIING. LOCAL ARRF RESPONDED, PASSENGERS & CREW EVACUATED ACFT WITHOUT INCIDENT. MX VISUALLY INSPECTED ACFT & ENG WITH NO DEFECTS NOTED. ENGINES WERE RUN UP WITH NO DEFECTS NOTED. MX ISSUED A SPECIAL FLT PERMIT FOR FURTHER INVESTIGATION. NO INFORMATION TO DETERMINE IF THERE WAS FLAME AS WELL AS SMOKE, ASSUMED FIRE REPORTED RESTRICTED TO ONE OR BOTH ENG JETPIPES. REPORT MENTIONS "LT ENGINE FLAMES/FIRE".

CA081119002	CNDAIR	GE	PROXIMITY SENSOR	FAILED
11/18/2008	CL6002B19	CF343B1	800440304	TE FLAPS

(CAN) FLIGHT WAS SET UP FOR LANDING AND SELECTED FLAPS TO 8 DEGREES. FLAPS ON 1 SIDE CAME DOWN TO 2 DEGREES AND FLAPS ON THE OTHER SIDE REMAINED AT 0 DEGREES. AN EMERGENCY WAS DECLARED AND PASSENGERS WERE BRIEFED. FLIGHT LANDED WITHOUT FURTHER INCIDENT AND STOPPED ON RUNWAY FOR FIRE CREWS TO DO A WALK AROUND AND THEN TAXIED TO THE GATE. MX TROUBLESHOOTING IAW FAULT CODES AND SKEW DETECTOR INDICATION LED TO REPLACEMENT OF THE LT L3 (P/N 8044-04, S/N 2676) AND L4 (P/N 80-044-03, S/N 2676) SKEW DETECTOR PROXIMITY SENSORS. FLAP OPERATION AND SKEW DETECTOR SYS OPS CHECKS CARRIED OUT WITH NO FURTHER FAULTS AND THE ACFT WAS RETURNED TO SERVICE.

CA081122005	CNDAIR	GE	UNKNOWN	SMOKE
11/11/2008	CL6002B19	CF343B1		

(CAN) "A08C0232: AS FLIGHT WAS ON THE TAKEOFF RUN, WHEN THE CREW RECEIVED A CAUTION MESSAGE FOR SMOKE IN THE LAVATORY. THE TAKEOFF WAS REJECTED AT 60 KTS AND ARFF WAS CALLED OUT. THE FLIGHT RETURNED TO THE APRON, PASSENGERS WERE DEPLANED, AND MX INSPECTED THE AIR CONDITIONING PACKS AND THE ACFT WAS RETURNED TO SERVICE. AFTER DE-ICING AGAIN, ANOTHER TAKEOFF WAS ATTEMPTED, BUT WAS REJECTED AT 100 KTS WHEN THE SMOKE IN THE LAVATORY CAUTION MESSAGE OCCURRED AGAIN. THE ACFT WAS INSPECTED AND FERRIED, WHERE MX IS CHANGING THE RT ENGINE (GE CF34-3B1).

CA081122004	CNDAIR		ACTUATOR	LOOSE
11/16/2008	CL6002C10		AV67023105	HORIZONTAL STAB

(CAN) AV670-23105-003 (LT) AND -004 (RT) DURING ROUTINE MX ON THE HORIZONTAL STAB TRIM ACTUATOR (HSTA), LOOSE BOLTS (ITEMS 24 AND 35) WERE FOUND IN THE UPPER BOLT LOCATIONS OF THE RT AND LT HSTA

UPPER ATTACHMENT FITTING ASSY ITEM 33).

CA080930001	CNDAIR	GE	DOOR	MISSING
9/28/2008	CL6002C10	CF348C1	CC670105202003	LT MLG

(CAN) DURING THE WALKAROUND THE CREW NOTICED THE LT MLG DOOR WAS MISSING. THE DOOR SEPARATED FROM ACFT DURING THE FLIGHT. THE PRELIMINARY ASSESSMENT FROM PICTURES SHOWS THE HINGE FITTINGS CRACKED AND THE ROD END SNAPPED ON THE DOOR ATTACHMENT POINT. LAST STRUCTURAL INSPECTION IAW AD CF2003-23 DONE 12 SEPT 2008.

CA081111006	CNDAIR	GE	RESERVOIR	LEAKING
10/20/2008	CL6002C10	CF348C5B1	9604501	HYD SYSTEM

(CAN) NR3 HYD SYS LOW PRESSURE CAUTION MESSAGE DURING CLIMB. INBD SPOILERS CAUTION MESSAGE ALSO PRESENT DUE TO HYD LOW PRESSURE. ACFT DECLARED EMERGENCY, ALTERNATE EXTENSION USED TO DEPLOY LANDING GEAR, AND RETURNED TO FIELD. FLUID LOSS WAS DISCOVERED FROM HYD SYS NR 3 RESERVOIR. HYD RESERVOIR WAS CHANGED AND ALL SYS TESTED AND FUNCTIONED SATIS. ACFT RETURNED TO SERVICE. NO P/N`S OR S/N`S AVAILABLE AT THIS TIME. UPDATE: 17-NOV-08, 08:08, "P/N 960450-1 S/N OFF: 239 S/N ON: 484".

CA081124002	CNDAIR		CONNECTOR	BURNED
11/23/2008	CL6002D24		D3899920MJ43SN	

(CAN) AT APPROX 1540Z AT 15000 FT 220 KIAS AS THE PF WAS CHECKING THAT THE PITCH DISCONNECT SYS WAS RE-ENGAGED. A LOUD NOISE WAS HEARD IN THE COCKPIT, AT THE SAME TIME THE PILOTS WINDSHIELD WIPER MOVED .2500 DISPLACEMENT AND THE A/SKID INBD, INBD BRAKE BRESS AND OB BRAKE PRESS CAUTION MESSAGES POSTED. MDC WAS CHECKED FOR FAULTS AND INDICATED TRU 1, ESS TRU 1 AND A/SKID INBD HAD FAILED. CB`S CHECKED, 1B5 TRU 1, 1G4 ANTI-SKID, 1G5 WIPER PILOT, 1G10 MAINT LIGHT, 1T2 ESS TRU 1, AND 2G3 BRAKE PRESS IND FOUND TO BE POPPED. DUE TO ELECTRICAL FAILURE AND NO INDICATIONS OF BRAKE PRESSURE, EMERGENCY DECLARED AND EMERGENCY VEHICLES REQUESTED FOR LANDING. AFTER LDG, ACPC CB`S FOR HYD PUMP 1B, 2B, 3A POPPED.

CA081205002	CNDAIR	GE	DISPLAY	INOPERATIVE
11/23/2008	CL604	CF343B	8221577202	MFD 1

(CAN) 30 MINUTES PRIOR TO LANDING, THE PILOT PRIMARY FLIGHT DISPLAY(PFD 1) WENT BLANK. THEN IAW AFM (SECTION 05-15-1) THE CREW SELECTED THE REVERSION MODE TO HAVE THE MULTIFUNCTION DISPLAY (MFD 1) IN COMPRESSED MODE, AT THAT TIME THE MFD 1 ALSO WENT BLANK. THE CREW RESELECTED REVERSION TO NORMAL, BOTH DISPLAY RETUNED TO NORMAL. APPROXIMATELY 10 MINUTES LATER, THE PFD 1 BLANK AGAIN AND OPERATED ON AND OFF EVERY 2- 3 MINUTES UNTIL LANDING. CONDITION WAS NO LONGER PRESENT AFTER FLIGHT AND REVERSION SYS WORKED NORMALLY. WIRING VERIFICATION DONE NO ANOMALY NOTED. AFD (PFD 1 POSITION) REPLACED IAW AMM 31-61-00. THE MFD 1 (P/N: 822-1917-202 S/N: 2NKRG) WAS ALSO REPLACED BUT A PRECAUTIONARY MEASURE . ACFT RETUNED TO SERVICE NO OTHER REPORT IN FOLLOWING FLIGHTS. MFG RELEASED ADVISORY WIRE AW600-31-2316 (19 NOV 2008) TO THEIR OPERATOR ADVISING ABOUT THIS POSSIBLE CONDITION, WHERE OTHER CL605 REPORTED SINGLE AFD FAILURE. CONDITION PRESENTLY UNDER INVESTIGATION AT MFG.

CA081115001	CVAC	ALLSN	CONTROL HEAD	CONTAMINATED
11/12/2008	340CVAC	501D13D	G340ENI	COCKPIT

(CAN) DURING APPROACH COM BECAME TEMPORARILY UNUSABLE DUE TO WATER CONTAMINATION IN COMM CONTROL HEAD. PART REMOVED AND DRIED OUT AND FUNCTION TESTED SERV, NO FURTHER PROBLEMS.

CA081117006	DHAV	PWA	YOKE	BROKEN
9/26/2008	DHC2MK3	PT6A27	CT2EC10221	INTAKE

(CAN) DURING A 100 HOUR INSP, THE YOKE LT INTAKE COWL BROKE AT MACHINED LOCKING TAB EAR CUT OUT UPON INSTALLATION WHILE RIVETING, LT YOKE-INTAKE COWL WAS REPLACED.

CA081106004	DHAV	PWA	GE	FLOAT	DETACHED
10/10/2008	DHC2MKI	R985AN14B			FUEL TRANSMITTER

(CAN) GENERAL ELECTRIC FUEL TRANSMITTER MODEL NR 56949-248, TYPE TJ-13. FUEL GAUGE READINGS WERE STUCK AT 22 GAL, INDICATING ON CENTER FUEL CELL. INVESTIGATION REVEALED THAT THE FUEL TRANSMITTER. FLOAT HAD BECOME DETACHED FROM THE FUEL TRANSMITTER. FUEL TRANSMITTER REMOVED, REPAIRED, TESTED AND REINSTALLED.

CA081022008	DHAV	PWA	CLEVIS BOLT	WORN
10/21/2008	DHC2MKI	R985AN14B	AN2412	CONTROL CABLE

(CAN) DURING AN AILERON CABLE (IN WING) REPLACEMENT THE CLEVIS BOLTS WERE FOUND TO BE WORN MORE THAT 30 PERCENT, REPLACED WITH NEW AN 24-12 CLEVIS BOLTS.

CA081027002	DHAV	PWA	STARTER GEN	WORN
9/10/2008	DHC3	PT6A135	23048016	

(CAN) STARTER GEN HAD LONG LIFE BRUSHES INSTALLED AT OVERHAUL. BRUSHES ONLY LASTED 611.5 HRS WHEN THEY SHOULD HAVE WENT THEIR 1200 HOURS. ONE BRUSH WAS RT AT THE LIMIT WHERE THE OTHER BRUSH WAS ABOUT 40 PERCENT WORN ONLY.

CA081114008	DHAV	PWA	FASTENER	LOOSE
11/13/2008	DHC6300	PT6A27		WING BOX

(CAN) DURING INSP, THERE WAS SEVERAL CHERRY MAX RIVETS FOUND TO BE LOOSE ON THE UNDERSIDE OF THE RT WING BETWEEN STATION 35.15 AND 97.50. THE RIVETS WERE ALL LOCATED ON A TRIPLE ROW OF RIVETS AT THE AFT SPAR. FURTHER INSPECTION REVEALED A TOTAL OF 160 RIVETS NEEDING REPLACEMENT. THE RIVETS WERE REPLACED AND THE ACFT RETURNED TO SERVICE.

CA081030002	DHAV	PWA	CLEVELANDPNU	SEAL	WRONG PART
10/24/2008	DHC6300	PT6A34		472439473232	WHEEL

(CAN) THIS PROBLEM WAS IDENTIFIED WHILE CARRYING OUT ROUTING MX ON AMPHIBIAN FLOAT MAIN WHEELS. THE MFG PARTS BOOK SPECIFIED WHEEL GREASE SEAL THAT WHEN INSTALLED WERE 0.010 TOO SMALL OF A DIAMETER, CAUSING THE SEAL TO FALL OUT OF POSITION. HAVE CONTACTED THE OEM MFG TO DISCUSS THIS ISSUE AND THEY CONFIRMED THE GREASE SEAL LISTED IN THE PARTS MANUAL IS TOO SMALL OF A DIAMETER AND THAT THEY ARE IN THE PROCESS OF AMMENDING THEIR PARTS MANUAL TO SHOW THE CORRECT SEAL. THESE FLOATS ONLY HAVE 32 HOURS TSN, MFG FAILED TO INFORM THEIR CUSTOMERS OF THIS PROBLEM WITH THE SIZE OF THE GREASE SEAL.

CA081204011	DHAV	PWA	PRESSURE SWITCH	MALFUNCTIONED
11/29/2008	DHC8102	PW120A	7G773	HYDRAULIC SYS

(CAN) NR 2 EDP AMBER LIGHT CAME ON AT 30 KTS. DURING TAKE-OFF ROLL. ABORTED TAKE-OFF. PRESS WAS NORMAL ON THE INDICATOR, BUT THE NR 2 EDP AMBER CAUTION LIGHT IS ON. TR128. CONNECTOR ON PRESSURE SWITCH CLEANED. NR 2 SYSTEM HYD PRESSURE SWITCH REPLACED.

CA081103002	DHAV	PWA	SOCKET	MELTED
7/16/2008	DHC8102	PW120A	BR63031023	CABIN LIGHTS

(CAN) DURING A C-CHECK INSP OF THE CABIN LIGHTING SYS IT WAS FOUND THAT THE NR 5 FLOURESCENT CABIN LIGHTING BALLAST WAS MELTED AT THE BULB SOCKET. BALLAST WAS REMOVED AND REPLACED. TT ON THE BALLAST CAN NOT BE ACURATLY DETERMINED BUT WITH A DATE STAMP OF FEB 11, 1987 IS LIKLEY ORIGINAL EQUIPMENT. LIGHT WAS FUNCTIONING AT THE TIME THE DEFECT WAS FOUND. ONE OTHER LIGHTING BALLAST WAS ALSO FOUND WITH MINOR DAMAGE OF A SIMILAR NATURE. IT WAS REPLACED AS WELL. SUBMITTED LATE AS THE C-CHECK WAS COMPLETED BY AN OUTSOURCE FACILITY AND UNTIL RECENTLY WAS NOT AWARE OF THE DAMAGED PARTS.

CA081114009	DHAV	PWA	STRUCTURE	DAMAGED
11/12/2008	DHC8102	PW120A		FUSELAGE

(CAN) FLT ENCOUNTERED MULTIPLE BIRD STRIKES AT 4000 FT, DURING AN APPROACH FOR LANDING INTO AIRPORT. CREW CONTINUED ON DESCENT PATH AND LANDING UNEVENTFUL. MX REQUESTED. SUBSTANTIAL DAMAGE TO THE RT SIDE OF RADOME AND STRUCTURE IMMEDIATELY BEHIND RADOME FROM IMPACT OF

GOOSE. ALSO EVIDENCE OF ANOTHER GOOSE HAVING STRUCK THE LT SIDE OF ACFT. POINT OF IMPACT BEING JUST ABOVE LT ENGINE INTAKE. GOOSE HAD SUBSEQUENTLY ENTERED INTAKE AND EXITED THROUGH THE OPEN ENG INTAKE BYPASS DOOR THAT WAS DAMAGED AS WELL. ACFT INSPECTED IN AIRPORT. RADOME REPLACED AND ACFT WAS THEN FERRIED TO MX BASE, UNDER A FERRY FLT PERMIT. RADOME REMOVED AGAIN TO FACILITATE REPAIRS TO BULKHEAD ON NOSE BEHIND RADOME. WEATHER RADAR ALSO REPLACED DUE TO A SLIGHT IMPACT DAMAGE FROM BIRD STRIKE. LT ENGINE LOWER COWLING ASSY HAD TO BE REPLACED DUE TO DAMAGE ENGINE BYPASS DOOR AND ATTACHING STRUCTURE. NO DAMAGE TO ENGINE OR PROPELLER. ALL RELEVANT INSPECTIONS FOR BIRD STRIKE CARRIED OUT IAW AMM 05-50-26, AMM 61-10-00 AND AMM 05-50-00.

CA081023001	DHAV	PWA		BEARING	SEIZED
10/23/2008	DHC8102	PW120A			CABLE PULLEY

(CAN) DURING FLAP INSP, AN ENGINEER FOUND AN AILERON PULLEY INSIDE THE WING BOX SEIZED. FURTHER INVESTIGATION REVEALED THE ADJACENT PULLEY WAS ALSO CORRODED. BOTH PULLEYS WERE REPLACED AND THE ACFT RETURNED TO SERVICE. 1915 HRS WERE REMAINING BEFORE COMPLETION OF TASK 2710/02 (11000 HRS).

CA081110001	DHAV	PWA	DHAV	BATTERY	INCORRECT
11/1/2008	DHC8102	PW120A		C362042702	ULB

(CAN) WRONG BATTERY INSTALLED IN UNIT. CORRECT BATTERY INSTALLED INTO ULB. REF WO NR 214939

CA081110007	DHAV	PWA		STRUCTURE	DAMAGED
11/10/2008	DHC8102	PW120A		87140011001	FUSELAGE

(CAN) BIRD STRIKE JUST UNDER NOSE AREA. FOUND NR 2 LOWER COWL WITH INTERNAL CONE DAMAGE, LOWER COWL REMOVED. ENGINE BOROSCOPED WITH MINIMAL DEBRIS FOUND INSIDE ENGINE. NO DAMAGE NOTED NO DEBRIS FOUND ON LP COMPRESSOR. AIRFRAME INSPECTION STILL TO BE CARRIED OUT. AIRFRAME INSPECTION COMPLETED AS PER MM CHAPTER 5. PROP INSPECTED AS PER HS MM.61.10. NEW LOWER COWL INSTALLED, GROUND RUN COMPLETED FOR POWER ASSURANCE AND TESTING OF LOWER COWL.

CA081111003	DHAV	PWA		WINDSHIELD	CRACKED
11/7/2008	DHC8106	PW121		8SC0043014	COCKPIT

(CAN) DURING CLIMB OUT, THE CREW WITNESSED THE RT COCKPIT HEATED WINDSHIELD CRACK. THE CRACK SLOWLY KEPT PROGRESSING TO A LENGTH OF ABOUT 5 INCHES. THE CREW INITIATED A RETURN TO BASE AND LANDED WITHOUT FURTHER INCIDENT. MX R&R THE WINDSHIELD. NO CAUSE AS TO THE FAILURE COULD BE DETERMINED, OTHER THAN IT APPEARS TO HAVE ORIGINATED AT THE EDGE OF THE WINDOW AT A HEATING ELEMENT. THE TOTAL TIME ON THIS WINDSHIELD COULD NOT BE DETERMINED.

CA081114002	DHAV	PWA		INDICATOR	FAILED
11/11/2008	DHC8106	PW121		4067644901	IVSI

(CAN) AFTER TAKOFF, CAPTAINS SIDE IVSI FAILED, ACFT RETURNED TO AIRPORT - IVSI REPLACED AND FUNCTION CHECK SERVICEABLE.

CA081118004	DHAV	PWA		LINE	CRACKED
11/16/2008	DHC8201	PW123D		82970009325	NR 2 HYD SYS

(CAN) ON DESCENT AT NIGHT IN HEAVY RAIN, FLIGHT CREW GOT NR 2 HYD PUMP CAUTION FOLLOWED BY TOTAL LOSS OF QUANTITY IN NR 2 HYD SYS. LEVELED AT F110 FOLLOWED QRH, DECLARED PAN, BRIEFED F/A AND PASSENGERS ON RETURN TO BASE FOR NORMAL LANDING WITH PRECAUTIONARY SERVICES IN ATTENDANCE. LINE MAINT INVESTIGATION AND CONFIRMED DEFECT, TRACED LEAK TO `RIGID LINE` P/N 82970009-325. WALL OF LINE FOUND CRACKED ADJACENT TO AN END FITTING. RIGID LINE REPLACED WITH NEW ITEM. AS ENGINE DRIVEN HYD PUMP WAS RUN IN FLIGHT FOR LONGER THAN FIFTEEN MINUTES, IT WAS ALSO REPLACED AS REQUIRED BY ACFT MANUAL. ALL SYS FUNCTIONED IAW THE AIRCRAFT`S MM. THE ACFT RETURNED TO SERVICE WITHOUT FURTHER INCIDENT.

CA081124007	DHAV	PWA		SUPPORT BRACKET	CRACKED
11/21/2008	DHC8301	PW123			AILERONS

(CAN) DURING HEAVY CHECK INSPECTION FOR ACFT (316), BOTH THE LT AND RT AILERON INPUT QUADRANT SUPPORT BRACKET ASSEMBLIES, ON BOTH THE INBD AND OTBD SIDES, WERE FOUND TO HAVE SIGNIFICANT CRACKING. FLEET CAMPAIGN HAS BEEN INITIATED TO INSPECT THE AFOREMENTIONED ASSEMBLIES ON THE DHC8-300 SERIES ACFT. REFERENCE IPC 27-12-00, FIGURE 10, PAGE 0, ITEM 130.

CA081118006	DHAV	PWA	MESSIER	TUBE	BROKEN
11/14/2008	DHC8301	PW123	8200103	82253	NLG

(CAN) ON SELECTING LANDING GEAR DOWN-PILOT REPORTED A LOUD CRACKING NOISE FROM THE NLG AREA. COULD NOT CONFIRM THAT THE GEAR WAS DOWN AND LOCKED USING NORMAL OR ALTERNATE VERIFICATIONS. AN EMERGENCY LANDING WAS MADE SUCCESSFULLY AFTER A FLYBY INSP SHOWED THAT THE NLG WAS EXTENDED. ACFT MADE A SUCCESSFUL LANDING AND WAS SECURED ON NOSE JACK INSPECTED . INSP REVEALED THAT THE PIVOT TUBE HAD CRACKED AND THAT THE DOWN LOCK HAD NOT GONE FULLY OVERCENTER. PART REPLACED AND ACFT WAS REMOVED OFF THE RUNWAY. AN PHYSICAL INSP OF THE PIVOT TUBE REVEALED THAT THIS WAS A PRE-MOD PIVOT TUBE AND NOT IAW AD CF-95-15. MFG`S ARE INVESTIGATING THE EVENT.

CA081125002	DHAV	PWA	FLEX LINE	BROKEN
11/25/2008	DHC8301	PW123	DSC252A40272	HYD SYSTEM

(CAN) AFTER LANDING AND PARKING, VISIBLE SMOKE FROM RT LDG. SMOKE DUE TO AN HYD LEAK FROM BRAKE NR 3 BOKEN FLEXIBLE HOSE. HOSE REPLACED IAW AMM 32-42-52.

CA081125012	DHAV	PWA	ENGINE	FAILED
11/16/2008	DHC8301	PW123		LEFT

(CAN) DURING CRUISE, WITH NO WARNING THE LT ENG SHUTDOWN ACCOMPANIED WITH A LOUD NOISE. THE FIRE WARNING FOLLOWED AND THE CREW DISCHARGED BOTH FIRE BOTTLES BEFORE DIVERTING THE FLIGHT WHERE A SINGLE ENGINE LANDING WAS ACCOMPLISHED. POST FLIGHT INSP REVEALED THAT THE PROPELLER WAS HARD TO ROTATE AND DEBRIS WERE FOUND IN THE ENG TAILPIPE. MFG WILL CONTINUE INVESTIGATING THE EVENT AND ADVISE OF ROOT CAUSE ONCE ESTABLISHED.

CA081114007	DHAV	PWA	STRUCTURE	DAMAGED
11/14/2008	DHC8301	PW123	85720013006	RT WING LE

(CAN) BIRD STRIKE ON LANDING RT WING ENGINE AREA. LE NR 3, ACFT INSPECTED IAW AMM 05-50-26. IMPACT DAMAGE CONCENTRATED AT RT NR 3 LE. RT NR 3 LE REPLACED IAW AMM, LEAK AND FUNCTION CHECKED. SERVICEABLE.

CA081105006	DHAV	PWA	ENGINE	MALFUNCTIONED
10/28/2008	DHC8301	PW123		NR 2

(CAN) DURING CLIMB SHORTLY AFTER T/O, THE NR 2 ENGINE HAD AN UNCOMMANDED AUTOFEATHER AND SUBSEQUENT OVERTORQUE. THE CREW SHUT THE ENGINE DOWN AND THE ACFT RETURNED TO THE POINT OF DEPARTURE WHERE AN UNEVENTFUL SINGLE ENGINE LANDING WAS ACCOMPLISHED. TROUBLESHOOTING LED TO THE REPLACEMENT OF THE TORQUE SIGNAL CONDITIONER UNIT AND THE TORQUE SENSOR. MM REQUIREMENTS ARE BEING PERFORMED FOR THE OVERTORQUE CONDITION BEFORE A DECISION FOR FURTHER ACTION IS TAKEN. MFG WILL CONTINUE INVESTIGATING THE EVENT AND ADVISE OF ROOT CAUSE ONCE ESTABLISHED.

CA081205001	DHAV	PWA	ENGINE	DAMAGED
7/23/2008	DHC8301	PW123		NR 2

(CAN) AN ACFT RETURNED TO BASE DUE TO ENGINE NR 2 FIRE WARNING LIGHT ILLUMINATE. ENGINE FOUND DAMAGED AND REMOVED FOR INVESTIGATION.

CA081001008	DHAV	PWA	RELAY	FAILED
8/14/2008	DHC8301	PW123	XD4N	DEICE SYSTEM

(CAN) DURING DESCENT FROM FL250, AS POWER WAS REDUCED BELOW 30 PERCENT TORQUE. WHEN DESCENDING THROUGH 23000` CABIN STARTED TO CLIMB RAPIDLY. DE-ICE PRESSURE CAUTION LIGHT

ILLUMINATED. NO LOUD NOISES OR SQUEALS. MX INVESTIGATION FOUND RELAY 2121-K6 AT FAULT. RELAY REPLACED, ACFT RETURNED TO SERVICE. (NOTE: PART IS CONSIDERED AN EXPENDABLE AND TIMES NOT TRACKED, TIMES PROVIDED ARE AIRFRAME TIMES)

CA081110004	DHAV	PWA	CONTROL CABLE	DISLODGED
11/9/2008	DHC8311	PW123		AILERONS

(CAN) RT WING FWD AILERON CONTROL CABLE FOUND SITTING BEHIND THE AILERON INPUT ROD QUADRANT GUARD. CABLE MOVED OUT OF ITS LOCATION WITH SLIGHT FINGER ACTION. CABLE HAS LIGHT RUBBING MARK BUT ALUMINUM QUADRANT GUARD FOUND BADLY GROOVED. WINGS CONTROL CABLE TENSION TOOK ON BOTH SIDE. LT SIDE MEASURED AT 30 LBS AND RT SIDE AT 20 LBS. RIGGING TENSION IS BETWEEN 55 AND 65 LBS AT 20 DEGREES CELSIUS. TENSION TOOK WITH CABLE MISROUTED AND AT PROPER PLACE, NO SIGNIFICANT TENSION DIFFERENCE AT 2-3 LBS. LT SIDE CABLE SECTION INSPECTED AT SAME LOCATION, CABLE FOUND ROUTED PROPERLY.

CA081121001	DHAV	PWA	SYMBOL GENERATOR	FAILED
11/20/2008	DHC8311	PW123	7004544314	NR 1

(CAN) SHORTLY AFTER TAKEOFF, THE CAPT`S PRIMARY FLIGHT DISPLAYS WERE MALFUNCTIONING, CAPTS EADI AND EHSI ARE BLANKING OUT INTERMITTENTLY , CREW ELECTED TO RETURN TO ORIGINATING AIRPORT. MX REPLACED NR 1 SYMBOL GENERATOR AND ACFT RETURNED TO SERVICE.

CA081103003	DHAV	PWA	LINE	CHAFED
11/2/2008	DHC8311	PW123	82970009325	HYD SYSTEM

(CAN) DURING CRUISE FLIGHT, THE ACFT REPORTED LOSING NR1 HYD SYS FLUID AND ACTIVATION OF NR1 ISO VALVE. COMMERCIAL DECISION MADE FOR ACFT TO RETURN TO ORIGINATING AIRPORT. FLAP (0) DEGREES AND LANDING CARRIED OUT THAT WAS DUE TO ACTIVATION OF NR1 HYD SYS ISO VALVE. MAINT INSP FOUND HYD LINE FROM ENG DRIVEN PUMP TO PRESSURE MANIFOLD CHAFED AT NACELLE CLAMP. LINE REPLACED. ENG DRIVEN PUMP REPLACED AS PUMP HAD OPERATED AFTER FLUID DEPLETION. LEAK AND FUNCTION CHECKS CARRIED OUT. ACFT RETURNED TO SERVICE.

CA081205003	DHAV	PWA	SUPPORT BRACKET	CRACKED
12/4/2008	DHC8311	PW123		AILERONS

(CAN) LT AND RT WING AILERON INPUT QUADRANT SUPPORT BRACKETS AT YW414.00 CRACKED. QUADRANT SUPPORT BRACKETS REPLACED.

CA081121006	DIAMON	CONT	TUBE	WORN
11/20/2008	DA20C1	IO240B	2227271200	RUDDER PEDAL

(CAN) DURING THE ACFT PRE-FLIGHT THE PILOT REPORTED THAT THE RUDDER PEDAL ASSY ON THE RT SIDE WAS DIFFICULT TO ADJUST ALONG THE SLIDE TUBE ASSY. CLOSER INSPECTION BY MAINT REVEALED THAT THE RT OTBD FWD RUDDER CABLE HAD WORN THROUGH THE S-TUBE THAT IS WELDED TO THE PEDAL ASSY. CABLE WAS EXPOSED THROUGH THE LOWER BEND OF THE S-TUBE TO A POINT WHERE IT WAS JAMMED IN ITS WEAR HOLE THUS RESRICTING THE SLIDE ACTION OF THE PEDAL ASSY. THE DEFECTIVE PARTS ARE BEING REMOVED FOR REPLACEMENT WITH NEW.

CA081118005	DIAMON	CONT	TUBE	WORN
11/17/2008	DA20C1	IO240B		RUDDER PEDAL

(CAN) INSP OF THE RUDDER PEDAL ASSY REVEALED EXCESSIVE WEAR ON THE S TUBE CAUSED BY WEAR FROM THE RUBBER CABLE. THE WEAR WAS DETECTED BY VISUALLY CHECKING THE OUTSIDE OF THE S TUBE FOR MATERIAL DEFORMATION IN THE AREA WHERE THE CABLE CAUSES THE MOST FRICTION ON THE INSIDE OF THE TUBE. THE RUDDER PEDAL ASSY AND CABLE WERE REPLACED WITH NEW.

CA081028004	DIAMON	CONT	TUBE	WORN
10/21/2008	DA20C1	IO240B	2227271200	RUDDER CONTROL

(CAN) DURING ROUTINE INSP/OPS CHAEK IT WAS FOUND THAT THE S-TUBE WHICH ALLOWS FOR THE

POSITIONING OF THE RUDDER PEDAL ON THE PILOTS RT SIDE, HAD WORN THE CABLE TO THE POINT OF FINDING A FEW BROKEN CABLE STRANDS. THE RUDDER CABLES WERE ONLY DUE FOR REPLACEMENT AT 3000 HRS.

CA081114003	DIAMON	CONT	PEDAL	CRACKED
11/12/2008	DA20C1	IO240B	2227271300	RUDDER

(CAN) DURING ROUTINE INSP THE RUDDER PEDAL WAS FOUND CRACKED.

CA081106006	DIAMON	CONT	ARM	CRACKED
11/5/2008	DA20C1	IO240B		NLG WHEEL FORK

(CAN) BOTH ARMS OF THE NLG WHEEL FORK ASSY WERE FOUND CRACKED APPROXIMATELY 1.75 INCH FWD OF THE WHEEL AXLE BOLT. BOTH ARMS ARE CRACKED THRU THE LOWER PORTION AND A .25 INCH CRACK HAS STARTED ON THE UPPER SIDE OF THE ARMS.

CA081211002	DIAMON	CONT	PROPELLER	CRACKED
1/16/2008	DA20C1	IO240B	W69EK763	TIP OF BLADE

(CAN) PRIOR TO A TRAINING FLIGHT WITH A STUDENT A WALK AROUND WAS PERFORMED ON THE ACFT WHERE IT WAS NOTED THAT ONE OF THE PROPELLER BLADE LEADING EDGE TIPS HAD AN INDICATION OF POSSIBLE ROCK CHIP DAMAGE OF APPROXIMATELY .2500 INCH IN LENGTH AND LESS THAN A .0625 INCH IN DEPTH. IT SHOULD ALSO BE NOTED THAT THE PREVIOUS CREW HAD REPORTED A SLIGHT ENGINE VIBRATION AT 1700 RPM. UPON INSP BY AN AME IT WAS DETERMINED THAT IN FACT THERE WAS A SLIGHT NICK POSSIBLY CAUSED BY A SMALL ROCK. UPON FURTHER INVESTIGATION A CRACK WAS FOUND THAT WAS LOCATED AT THE MIDPOINT OF THE BLADE AT THE VERY TIP AND EXTENDED INWARD APPROX 2 INCHES. BY APPLYING PRESSURE TO EITHER OPPOSING SIDES OF THE BLADE TIP THE CRACK BECAME VERY APPARENT. THE PROPELLER MM ALSO DRAWS REFERENCE TO (LOOK ESPECIALLY FOR VIBRATION) (REFERENCE AMM 61-10-00 PAGE 203) AS A POSSIBLE INDICATION OF PROPELLER PROBLEMS THAT NEED INVESTIGATING. THE ACFT WAS IMMEDIATELY REMOVED FROM SERVICE AND A NEW PROPELLER ASSY WAS INSTALLED.

CA081211003	DIAMON	CONT	PROPELLER	CRACKED
11/10/2008	DA20C1	IO240B	W69EK763T	TIP OF BLADE

(CAN) IN BETWEEN AND PRIOR TO A TRAINING FLIGHT THE PILOT AND STUDENT CONDUCTED A WALK AROUND WHERE IT WAS NOTICED THAT ON THE NR1 BLADE TIP THERE APPEARED TO BE A CRACK EMANATING FROM THE CENTER OF THE BLADE TIP WHICH EXTENDED INWARD TOWARDS THE ROOT. AN AME CONDUCTED A VISUAL INSPECTION UNDER 10X MAGNIFICATION AND VERIFIED THAT A CRACK EXISTED FROM THE CENTER OF THE NR1 BLADE TIP AND EXTENDED APPROX 2 INCHES INWARD TRAVELLING TOWARDS THE BLADE ROOT. THE AIRCRAFT WAS IMMEDIATELY REMOVED FROM SERVICE WHERE A NEW PROPELLER ASSEMBLY WAS INSTALLED.

CA081110003	DIAMON	CONT	SPAR	DELAMINATED
11/6/2008	DA20C1	IO240B		FUSELAGE

(CAN) DURING THE 6000 HOUR INSP DELAMINATIONS AND CRACKS WERE DISCOVERED ON THE SPAR BRIDGE. THE DELAMINATIONS AND CRACKS WERE FOUND ON THE RT SIDE ON THE AFT UPPER CORNER AT THE FILLET FROM BRIDGE TO SKIN INSIDE OF THE FUESLAGE AS VIEWED FROM THE GAS TANK AREA. A SERIES OF INTERCONNECTED CRACKS THAT APPREAR TO BE IN THE RESIN ONLY. OVERALL LENGTH IS APPROX 40 MM, VARYING IN DEPTH FROM SURFACE CRACKS TO APPROX 3 MMM DEEP. THE LT SIDE HAD DELAMINATIONS AND CRACKS ON THE UPPER AFT CORNER AT THE FILLET FROM BRIDGE TO SKIN INSIDE OF THE FUSEALGE (THE OPPOSITE TO THE RT SIDE). LENGTH WAS 6-8MM AND DEPTH 5MM.

CA081110005	DIAMON	CONT	FORK	CRACKED
11/9/2008	DA20C1	IO240B	203220080	NOSE GEAR

(CAN) ON PREFLIGHT OF ACFT, PILOT DISCOVERED CRACKS IN NOSE WHEEL FORKS APPROXIMENTLY 1 INCH FROM AXLE AT RADUS OF MACHINING (MACHINED FOR WEIGHT REDUCTION DURING PRODUCTION), ON SIDE OF FORKS. RT SIDE IS CRACKED DEPTH OF MACHINE AREA ON TOP AND .7500+ ON THE BOTTOM LT SIDE OF FORK CRACKED BOTTOM DEPTH OF MACHINING AND .5+ ON TOP. ACFT WAS HAD PROPELLER STIKE ON LANDING APPROX 1000 HRS AGO, NOSE GEAR LEG WAS REPLACED AT THAT TIME AND FORK VISUALY INSPECTED WITH NO CRACKS DETECTED. NO CRACKS WERE NOTED DURING 100 HR INSP THAT WAS COMPLETED 75 HR AGO. NO OTHER REPORTED HARD LANDING HAVE BEEN REPORTED. ACFT INSPECTED, NO OTHER DAMAGE DETECTED.

MFG HAS ASKED FOR PARTS TO BE RETURNED FOR ENGINEERING EVALUATION, AND NEW FORK ASSY TO BE INSTALLED.

CA080925013	DIAMON		ALTERNATOR	INTERMITTENT
9/18/2008	DA40		ALU8521LS	

(CAN) INSUFFICIENT CLEARANCE BETWEEN THE HEAD OF THE FIELD TERMINAL STUD AND HSG. BRUSH HOLDER ASSY WHEN FLEXED INWARD, CAUSES THE HSG AND HEAD OF THE STUD TO TOUCH. IF YOU REMOVED THE BRUSH HOLDER ASSY YOU WILL NOTICE THAT THE RING TERMINAL THAT IS CRIMPED TO THE BRUSH LEAD IS SLIGHTLY LARGER THAN THE HEAD OF THE TERMINAL BOLT. IT IS ACTUALLY THE RING TERMINAL THAT TOUCHES THE HSG. THIS TRIPS THE VOLTAGE REGULATOR OFF LINE. THE ALTERNATOR SWITCH NEEDS TO BE CYCLED TO RESET THE REGULATOR.

2008FA0000841	DIAMON	CONT	LATCH	DISENGAGED
11/24/2008	DA40	IO360*		PAX DOOR

AT 10500 FT IN CRUISE FLIGHT, GOT AN AUDIBLE "DING" ON THE G1000 WARNING AND THEN A LIGHT SAYING THAT A DOOR WAS OPEN. BACK DOOR HAD COME OPEN IN FLIGHT. THE DOOR HAD BEEN SHUT AND THERE HAD BEEN NO WARNING DURING PRE-FLIGHT CHECK AND RUN-UP. WAS IN THE RT SEAT AND COULD NOT REACH THE DOOR UNTIL I UNDONE MY SEATBELT. TRIED TO SHUT THE DOOR, BUT DUE THE DESIGN OF THE HANDLE, THERE IS NO WAY TO SHUT THE DOOR. THE SAFETY LATCH WAS ABOUT TO LET GO AND I HELD ONTO THE HANDLE AS LONG AS I COULD. IT FINALLY GOT INTO THE AIR SCREAM AND WAS JERKED OUT OF MY HAND AND THEN THE DOOR DEPARTED THE AIRCRAFT. DECLARED AN EMERGENCY AND LANDED.

2008FA0000861	DIAMON	LYC	STARTER	BROKEN
11/17/2008	DA40	IO360M1A	14924LS	ENGINE

STARTER HOUSING BROKE AT FRONT CASTING BREAKING OFF FRONT MOTOR SHAFT SUPPORT BEARING WHICH ALLOWED STARTER SHAFT TO DROP DOWN PREVENTING POSITIVE ENGAGEMENT OF STARTER TO FLY WHEEL. CONVERSATION WITH AIRCRAFT MFG NOTED THIS IS NOT AN ISOLATED INCIDENT AND THERE ARE DEFECTS IN THE FRONT CASTINGS. (K)

CA081104003	DIAMON	LYC	BRACKET	BROKEN
9/27/2008	DA40	IO360M1A	07A19474	ALTERNATOR

(CAN) DURING A ROUTINE INSP, THE ALTERNATOR MOUNTING BRACKET WAS FOUND TO BE BROKEN ACROSS THE WIDTH OF THE BRACKET ADJACENT ONE OF THE MOUNTING HOLES. (REAR MOUNTING BOLT THAT IS USED TO ATTACH THE BRACKET TO THE ENGINE).

2008FA0000839	DIAMON	THIELT	SENSOR	DIRTY
11/22/2008	DA42	TAE1250299	NE00000133101	CRANKSHAFT

FADEC CONTROLLED POWERPLANT/ HAD UNCOMMANDED POWER REDUCTION TO 75 PERCENT (3 SEPARATE WRITE-UPS) ACCOMPANIED BY MINOR ENGINE SURGING AT VARIOUS TIMES DURING NORMAL CRUISE FLIGHT. MFG FIX WAS RE-DESIGNED FADEC SOFTWARE, THAT DID NOT ALLEVIATE THE PROBLEM. WHILE PERFORMING A CLUTCH PLATE INSPECTION THE AREA WAS CLEANED AS WELL AS THE CRANKSHAFT POSITION SENSORS, WHICH IS ONE OF THE FADEC'S SENSORY INPUTS. THIS ACTION SEEMED TO RESOLVE THE AFOREMENTIONED PROBLEMS. TO DATE THERE IS APPROX 23 HOURS OF ENGINE OPERATION TIME WITH NO REPEAT OF THE ISSUE. OTHER OPERATORS HAVE DESCRIBED HAVING THE SAME TYPE OF PROBLEM.

CA081104002	DOUG	PWA	COMPRESSOR	SEIZED
10/31/2008	DC3C	PT6A67R		RT EINGE

(CAN) DURING CRUISE, THE RT GENERATOR KICKED OFF-LINE. SHORTLY AFTER THAT TEMP INDICATIONS IN THE RT ENG CLIMBED CAUSING THE FLIGHT CREW TO SHUT DOWN THE ENGINE AND CONTINUE ON TO LAND AT THE SCHEDULED POINT OF LANDING. THE STARTER GEN WAS REMOVED AND THE COMPRESSOR SECTION OF THE ENGINE WAS FOUND TO BE SEIZED.

CA081112011	DOUG	PWA	GENERATOR	INOPERATIVE
10/31/2008	DC3C	PT6A67R		NR 2

(CAN) DURING CRUISE, THE CREW OBSERVED THE NR 2 GENERATOR GO OFF LINE WITH AN INCREASE IN ENG TEMP. IT WAS SHUTDOWN AND A SINGLE ENG LANDING FOLLOWED. POST FLIGHT INSP FOUND THE COMPRESSOR HARD TO ROTATE. THE ENGINE WILL BE REMOVED AND FORWARDED FOR INVESTIGATION AND REPAIRS. MFG WILL CONTINUE INVESTIGATING THE EVENT AND ADVISE OF ROOT CAUSE ONCE ESTABLISHED.

CA081124001	DOUG	PWA	FEDERAL	BUNGEE	MISMARKED
10/6/2008	DC3CS4C4G	PT6A67R			SKI

(CAN) DURING AERIAL WORK WITH SKIS INSTALLED THE RT MAIN GEAR DID NOT EXTEND FULLY. WITH THE ASSISTANCE OF A BELLY MOUNTED CAMERA THE CAUSE WAS DETERMINED TO BE THE SKI FWD LIMIT CABLE ASSY. THE LANDING GEAR WAS CYCLED AND EXTENDED SUCCESSFULLY. BOTH LT AND RT SKI FWD LIMIT CABLE ASSEMBLIES WERE REPLACED. THE ENSUING INVESTIGATION DETERMINED THAT THE BUNGEE ASSEMBLIES ON THE FWD LIMIT CABLE ASSEMBLIES WERE TOO LONG ALLOWING THE CABLE TO HOOK ITSELF UNDER THE SKI PIVOT BOLT NOT ALLOWING THE LANDING GEAR TO EXTEND FULLY. THE PROPER LENGTH BUNGEE WOULD NOT ALLOW THE CABLES TO BE LOCATED IN THAT AREA. THE ORIGINALLY INSTALLED BUNGEE ASSEMBLIES WERE UNITS SUPPLIED BY THE ACFT STC HOLDER, WHO HAS BEEN NOTIFIED OF THE INCORRECT LENGTH BUNGEE. OTHER BUNGEE ASSEMBLIES FOR OUR OTHER SKIS HAVE BEEN INSPECTED FOR PROPER LENGTH.

AALA200810280	DOUG			INTERCOSTAL	CRACKED
11/12/2008	DC983				ZONE 100

INTERCOSTAL CRACKED IN CEILING OF MID CARGO. REPLACED INTERCOSTAL.

CA080929005	DOUG	ALLSN		PITCH LINK	SEPARATED
9/24/2008	MD500N	250C20B		369X2172313	TAIL ROTOR

(CAN) THE PITCH CHANGE ROD END BEARING BALL WAS FOUND SEPARATED FROM THE PITCH LINK. THE PILOT REPORTED THAT THE TAIL ROTOR FELT DIFFERENT UPON LANDING. IT WAS FOUND BY THE PILOT WHEN DOING A POST FLIGHT INSPECTION. AN AME WAS DISPATCHED TO ATTEND THE PROBLEM. BOTH PITCH CHANGE RODS WERE REPLACED AND THE HELICOPTER WAS RETURNED TO SERVICE.

CA081119001	EMB			SKIN	CRACKED
11/19/2008	ERJ170100SE				FUSELAGE

(CAN) CRACKS WERE SUSPECTED AFTER GVI AND CONFIRM BY NDT RADIATING FROM ONE FASTENER HOLE IN LT FUSELAGE SKIN PANEL AT FRAME 94 STR 03 AND 04 LT AND SAME AT FRAME 94 STR 03 AND 04 RT.

CA081120003	EMB	GE		BRAKE SYS	DISINTEGRATED
11/7/2008	ERJ170200SU	CF348E5A1		900005831PR	MLG

(CAN) DURING PUSHBACK, GRND PERSONNEL REPORTED SMOKING BRAKES. FOUND NR3 BRAKE ROTORS HAD FAILED. REPLACED BOTH NR3 WHEEL AND BRAKE ASSY IAW AMM 32-49-05 AND 32-49-11. S/N OF THE BRAKE IS JAN05-0530.

CA081104004	EMB	GE		FITTING	BROKEN
10/31/2008	ERJ170200SU	CF348E5A1		17063073405	RUDDER

(CAN) ON PUSHBACK, RECEIVED FLIGHT CONTROL- NO DISPATCH MESSAGE. INVESTIGATION FOUND THE RUDDER UPPER FTG LUG BROKEN. RUDDER PCU ACTUATOR WAS INSTALLED 2007-05-17. CAUSE WAS FOUND TO BE MISSING SLIDING BUSHING, P/N 170-62218-003, IPC 27-21-05 FIG.01 ITEM 170. THE ITEM WAS FOUND GREASED BUT NOT WORN IN A NEARBY CAVITY OF THE RUDDER. THIS IS CONFIRMED BY A CUT/SLICED COTTER PIN THAT IS STILL IN THE BOLT, WHICH WAS PULLED THROUGH THE LOWER LUG, AND CAUSED DAMAGE ON THE FLANGED BUSHING IN THE LOWER LUG, BUT NO DAMAGE WAS FOUND ON THE INSIDE OF THE SLIDING BUSHING. THE BUSHING WHEN CORRECTLY INSTALLED, SITS INSIDE THE FLANGED BUSHING, AND PREVENTS SIDE LOADS FROM BEING APPLIED ON THE LUGS WHEN THE ATTACH BOLT IS TORQUED.

CA081113004	EMB	GE		DUCT	SPLIT
11/12/2008	ERJ190100IGW	CF3410E5A1		ZZ84M46P01	BLEED AIR SYS

(CAN) LT PRECOOLER INLET RUBBER DUCT SHOWS SIGNS WHERE THE SEAM HAS COME APART, AS A RESULT THE FAN AIR HAS FROM THE SPLIT SEAM HAS CAUSED DAMAGE TO THE THRUST REVERSER HEAT SHIELD. T/R

FIRE BLANKET PN 104M1031-22, SN6011203-013 THIS HAS ALSO OCCURRED ON ACFT FIN 317 C-FHKI SN 190-0052 AND FIN 342.C-FNAP SN 190-00142.

CA081023002	EMB	GE	RESTRICTOR VALVE	CRACKED
10/13/2008	ERJ190100IGW	CF3410E5A1	19071270901	HYDRAULIC SYS

(CAN) HYD LEAK 10 DPM ON SYS NR2 RETURN LINE AND UNION FREE FALL SELECTOR VALVE RT WW AREA. WRENCH CHECK NIL FIX. FOUND RESTRICTOR VALVE CRACKED ON EMERGENCY EXTENSION SELECTOR VALVE. RESTRICTOR VALVE REPLACED, BUT STILL HAD A LEAK. UPON CLOSE INSP, FOUND A VERTICAL CRACK IN THE THREADED PORTION OF THE VALVE UNDER THE B-NUT (BOTH RESTRICTOR VALVES). THESE FINDINGS RAISED THE CONCERNS OF ATTACHING A STAINLESS STEEL LINE AND B-NUT TO THE LIGHTER ALUMINUM RESTRICTOR VALVE. A 1.1250 IN WRENCH IS REQUIRED TO TIGHTEN THE "B" NUT. NOTE, WE ALSO REPLACED THE HYD LINE ASSY.

CA081210010	FOKKER	PWA	ENGINE	POWER LOSS
11/27/2008	F27MK50	PW125B		

(CAN) DURING CLIMB AFTER T/O, ENGINE POWER LOSS OCCURRED (AT APPROX 300 FT ALTITUDE). THE ENGINE WAS SECURED AND A TURNBACK INITIATED. THE ACFT MADE A SINGLE ENGINE LANDING. POST EVENT INSP FOUND FRACTURED HP BLADES. MFG WILL CONTINUE INVESTIGATING THE EVENT AND ADVISE OF ROOT CAUSE ONCE ESTABLISHED.

CA080930002	FOUND	LYC	PROPELLER	VIBRATION
9/14/2008	FBA2C	O540A1C5		

(CAN) PROPELLER REMOVED FOR EVALUATION DUE TO SMALL VIBRATION. NOT CONSIDERED SERIOUS.

CA081205008	FRCHLD	GARRTT	WINDSHIELD	FAILED
12/4/2008	SA227CC	TPE33111U	HYLZ88821	COCKPIT

(CAN) ON APPROACH THE LT WINDSHIELD SHATTERED. MX WAS DISPATCHED TO REPLACE THE WINDSHIELD. THE TEMP CONTROLLER WAS FOUND TO BE DEFECTIVE ALSO. TEMP CONTROLLER REPLACED ALONG WITH WINDSHIELD AND ACFT RETURNED TO SERVICE.

CA081120001	GROB	LYC	GROB	BUCKLE	UNSERVICEABLE
11/19/2008	G115C	O320D1A		SL12	SEAT BELT ASSY

(CAN) BUCKLE WOULD NOT RELEASE.

CA081031002	GULSTM	GARRTT	HOUSING	CRACKED
10/29/2008	690A	TPE33110T	ESI2440	MLG

(CAN) DURING THE REQUIRED 5 YEAR OVERHAUL ON THE LANDING GEAR, A CRACK WAS DISCOVERED ON THE MLG HSG VISUALLY. IR WAS CONFIRMED USING NDT METHODS LPI AS WELL AS EDDY CURRENT FOR CONFIRMATION. EDDY CURRENT READING INDICATED A DEPTH OF .040". THIS WAS THE FIRST OVERHAUL OF THIS LANDING GEAR BY THE OPERATOR SINCE PURCHASE 3 YEARS AGO.

CA080603005	HUGHES	ALLSN	PUMP	MALFUNCTIONED
6/2/2008	369E	250C20R2		FUEL

(CAN) REINFORCED PAPER WIPERS LEFT IN THE FUEL TANK AFTER WORK CARRIED OUT. DURING A 300 HOUR INSP, THERE WAS SIGNIFICANT FUZZ LIKE DEBRIS FOUND IN THE ENGINE DRIVEN FUEL PUMP FILTER THAT WAS A BLUISH COLOR. WHEN PICKING UP THE HELICOPTER AT THE SERVICE CTR WHERE THE ACFT WAS DISASSEMBLED, INSPECTED, PAINTED AND REASSEMBLED, USED ONE OF THEIR SHOP TOWELS DURING THE ACCEPTANCE INSP. CALLED THE SERVICE CTR TO CONFIRM THAT THEY WERE USING THIS TYPE OF WIPER. THAT WAS VERIFIED AS CORRECT. THE FUEL CELL WAS OPENED UP AND A LARGE INTACT WIPER WAS FOUND OVER THE START FUEL PUMP. A SECOND .5 PIECE WAS RECOVERED FROM THE FUEL CELL INTERCONNECT AREA. AN SMS REPORT WAS PREPARED AND OUR INTERNAL SAFETY TEAM IS NOW DOING THE FOLLOW UP TO THIS REPORT. ALL FUEL SYS FILTERS WERE CLEANED OR REPLACED (ENGINE DRIVEN FUEL PUMP FILTER,FCU FILTER AND FUEL NOZZLE FILTER) AND THE TANK INTERIOR WAS WIPED OUT. NO FUTHER DEBRIS WAS FOUND.

CA081120004	KAMAN	LYC	MOUNT	CRACKED

11/16/2008	K1200	T5317A	K974004107	M/R HEAD

(CAN) CRACK DISCOVERED ON LT FWD STRUT MOUNT FITTING.

H51R08001	LEAR		SWITCH	STICKING
12/3/2008	31A		2MD31AX287G	EXTINGUISHERS

FAILURE OF SWITCH IN THE ENGINE FIRE PULL SWITCH ASSY. AFTER ACCESSING THE FIRE PULL SWITCH ASSEMBLY TO VERIFY AIRWORTHINESS DIRECTIVE 95-21-03, AMENDMENT 39-9388, APPLICABILITY, THE S4 MICROSWITCH FAILED IN THE CLOSED POSITION. THE AIRWORTHINESS DIRECTIVE WAS ISSUED FOR THIS PROBLEM, BUT WAS NOT APPLICABLE TO THIS SWITCH BY S/N, SUSPECT ADDITIONAL LOTS MAY BE EFFECTED. AFTER REASSEMBLY OF GLARESHIELD, FUNCTIONAL TESTS REVEALED THE MICROSWITCH HAD STUCK CLOSED, PREVENTING LT ENGINE BLEED AIR FROM WORKING. VISUAL INSPECTION OF SWITCH SHOWS THE S4 MICROSWITCH ACTUATOR STUCK IN THE RECESSED POSITION. SWITCH P/N 6608214-3, S/N 2280, F.T. DATE FEB '93, MANUFACTURE EATON P/N 865001-3 AD WAS FOR SWITCHES S/N 2326-2377 & 3000-3019.

CA081121005	LEAR	GARRTT	STARTER GEN	FAILED
11/19/2008	31A	TFE73123B	23080023A	NR 1

(CAN) GENERATOR FELL OFF, INE AND A SLIGHT VIBRATION WAS FELT.

CA081022003	LEAR	GARRTT	LATCH	UNSERVICEABLE
10/20/2008	31A	TFE73123B	H1721050100	SERVICE DOOR

(CAN) SINGLE POINT FUEL DOOR LATCH OPENED IN FLIGHT.

CA080930007	LEAR	GARRTT	SPACER	CRACKED
9/30/2008	35A	TFE73122B	24410071	LT MLG ACTUATOR

(CAN) UPON REMOVAL OF LT GEAR ACTUATOR DUE TO HYDR BYPASS, CONICAL SPACER, P/N 2441007-1, ITEM NR 32 IN IPC 32-32-20, WAS FOUND CRACKED. RT ACTUATOR REMOVED, SPACER VISUALLY INSPECTED. NO CRACK INDICATIONS. BOTH ACTUATOR PILLARS REMOVED, CLEANED AND MAGNETIC PARTICLE INSPECTED IAW NDT MANUAL. NO DEFECTS NOTED. SURROUNDING AREA VISUALLY INSPECTED, NO DEFECTS NOTED. ACTUATORS INSTALLED WITH NEW SPACERS ON BOTH SIDES IAW ACFT MM. F/C OF GEAR C/O SERVICEABLE.

CA081024006	LEAR	GARRTT	GROUND WIRE	OPEN
10/10/2008	45LEAR	TFE7312		TRIM SYS

(CAN) ON LANDING, A WHITE CAS MESSAGE (SECONDARY TRIM FAULT) APPEARED. SYS TROUBLESHOT AND FOUND AN OPEN GROUND WIRE AT RBA0664N-22 AT SPLICESP322. SPLICE REPAIRED AND FUNCTION CHECKED SERVICEABLE.

2008FA0000878	MOONEY		TUBE	BROKEN
11/27/2008	M20F			NLG

PILOT STATED THAT HE HEARD A LOUD SOUND DURING THE TAKE OFF ROLL OFF OF A GRASS STRIP AND THE ACFT BEGAN TO "HANDLE DIFFERENTLY". HE CONTINUED TO ACCELERATE BRIEFLY AND THEN DECIDED TO ABORT THE TAKE-OFF. INCIDENT INVESTIGATION FOUND ACFT ON ITS NOSE WITH THE NOSE LANDING GEAR FOLDED BACK UNDERNEATH THE ACFT. INSPECTION REVEALED THAT THE TUBING OF THE NLG LEG ASSEMBLY WAS BROKEN. THERE WERE POSSIBLE STRESS FRACTURES AT THE WELS POINTS ON BOTH SIDES OF THE STRUCTURE.

2008FA0000840	MOONEY	CONT	GROUND STUD	MISINSTALLED
11/24/2008	M20K	TSIO360*	MS902982	AIRFRAME

AIRFRAME GROUND PLUG IN HAS NEVER BEEN CONNECTED TO AIRFRAME GROUND. BASE OF RECEPTACLE WAS INSULATED FROM AIRFRAME GROUND BY PRIMER ON METAL ANGLE. WE FOUND COMPLETE ISOLATION FROM GROUND POINT TO FUEL FILLER OPENING, NO GROUND ON OUR FUELING OPERATIONS FOR PAST 3 YEARS. MFG SHOULD CHECK CONTINUITY ON AIRFRAME GROUND PORT AT MFG SINCE NO OTHER TIME IN LIFE OF ACFT IS IT REQUIRED TO CHECK.

2008FA0000849	NAMER		STARTER GEN	FAILED

11/1/2008	T28C	30B4521A	ENGINE

STARTER GEN PREVIOUSLY HAD A FIELD FAILURE-COMPLETE MELT DOWN AFTER APPROX 12 FLIGHTS AFTER OVERHAUL. IT WAS REPAIRED UNDER WARRANTY AND REINSTALLED. AFTER APPROX 4 FLIGHTS IT WOULD NOT CONSISTENTLY CARRY THE LOAD. ACFT REGULATION/CHARGING SYST CHECKED AND FOUND CORRECT. THE INSP COVER ON THE GENERATOR WAS REMOVED AND DAMAGE TO THE COMMUTATOR WAS FOUND PROBABLY DUE TO THE PREVIOUS FAILURE. INSP OF 1 SET OF BRUSHES REVEALED GROOVED FACES AND THE LACK OF PROPER BRUSH RUN AT OVERHAUL. AS STATED THIS IS 2ND FAILURE OF THIS ITEM IN A VERY SHORT TIME, THESE FAILURES ARE OBVIOUSLY DUE TO THE LACK OF PROPER PROCEDURES/ WORKMANSHIP BEING FOLLOWED. (K)

CA081112007	PIAGIO	PWA	ENGINE	MAKING METAL
10/31/2008	P180	PT6A66		

(CAN) DURING FLIGHT, THE ENGINE LOST TORQUE AND OIL PRESSURE. THE PILOT SHUT IT DOWN AND PERFORMED A SINGLE ENGINE LANDING. POST FLIGHT INSPECTION FOUND THE PROPELLER SEIZED AND METAL DEBRIS IN THE EXHAUST. MANUFACTURER WILL CONTINUE INVESTIGATING THE EVENT AND ADVISE OF ROOT CAUSE ONCE ESTABLISHED.

CA081105003	PILATS	PWA	LANDING GEAR	MALFUNCTIONED
11/2/2008	PC1245	PT6A67B	5322012040	NOSE

(CAN) WHILE TAXING FOR TAKEOFF, THE NOSE STEERING BECAME VERY STIFF. PILOT RETURNED TO THE RAMP AND MAINT DISCOVERED THAT WITH THE ACFT WEIGHT ON THE STRUT, AND EVEN WITH THE SCISSORS DISCONNECTED, THE STEERING WAS EXTREMELY HARD, AND MADE A RATCHETING SOUND. THE NOSE GEAR ASSY WAS REPLACED AND THE ACFT RETURNED TO SERVICE. AWAITING TEAR DOWN REPORT ON NOSE GEAR ASSY TO ASCERTAIN CAUSE.

CA081121004	PILATS	PWA	SEAL	SPLIT
11/21/2008	PC1245	PT6A67B		LT AILERON

(CAN) THE AILERONS WERE REMOVED AT THE ANNUAL INSP FOR BEARING REPLACEMENT. A SMALL RIP WAS FOUND IN THE INNER SEAL OF THE LT AILERON WHICH ATTACHES BETWEEN THE WING AND THE AILERON BALANCE WEIGHT ATTACHMENT. WHEN THE MS35207-XXX SCREWS WERE REMOVED THE WERE FOUND TO BE CORRODED. THE AREA WAS INSPECTED FOR CORROSION CLEANED AND NEW SCREWS INSTALLED WITH CPC GRADE 2 COMPOUND. THE RT AILERON WAS INSPECTED AND FOUND WITH SIMILAR CORROSION.

CA081112012	PILATS	PWA	DRAG LINK	BROKEN
11/11/2008	PC1245	PT6A67B	5322012289	MLG

(CAN) ON CALL MAINT RECEIVED A PHONE CALL FROM CAPTAIN, PILOT REPORTED HEARING A LOUD NOISE FROM THE NOSE GEAR AREA WHEN DEPARTING THE NORTHERN AIRPORT. HE SAID THE NOSE GEAR TRANSIT LIGHT DID NOT EXTINGUISH AND HE THEN PROCEEDED TO RESWING THE GEAR WHICH THEN CAUSED THE LIGHT TO EXTINGUISH. ON DECENT, HE EXTENDED THE GEAR AND SAID THE NOSE GEAR TOOK LONGER THAN NORMAL TO FULLY EXTEND AND GIVE GREEN DOWN AND LOCKED INDICATION. MX INSTRUCTED HIM TO VISUALLY INSPECT THE NOSE GEAR AND GEAR BAY AND FOUND NOTHING UNUSUAL. THE DESISON WAS MADE TO RETURN TO DEPARTURE WITH THE GEAR EXTENDED. MX WAS THERE TO MEET THE ACFT WHEN IT RETURNED. THE ACFT WAS HANGERED AND PLACED ON JACKS. MX THEN DID A GEAR SWING AND THE NOSE GEAR DRAG LINK FAILED. THE DRAG LINK WAS REPLACED WITH NEW AND 3 GEAR SWINGS COMPLETED. VISUAL INSP CARRIED OUT OF THE NOSE GEAR BAY WITH NO FAULTS FOUND.

CA081113001	PILATS	PWA	CONTROLLER	FAILED
11/13/2008	PC1247	PT6A67	0710159803	MFD

(CAN) WE HAVE JUST EXPERIENCED THE 4TH FAILURE OF THE KMC 2220 MFD CONTROLLER. THE JOYSTICK FUNCTION FAILS TO ALLOW CURSOR MOVEMENT ON THE FLIGHT SCREENS AND DOES NOT ALLOW FLIGHT CREWS TO ENTER OR MODIFY ROUTING IN FLIGHT. THE REPLACEMENT UNIT CLEARED PROBLEM FOR NOW. HAVE BEEN TOLD MFG IS LOOKING INTO THE PROBLEM AS WE ARE NOT THE ONLY CUSTOMER HAVING THIS ISSUE.

2008FA0000860	PIPER	BRAKE DISC	CRACKED

11/18/2008	PA23250		16405700	RT MLG

THE DISC WAS FOUND DURING ROUTINE MAINTENANCE TO HAVE A RADIAL CRACK EXTENDING FROM APPROX .5 INCH FROM THE OUTER CIRCUMFERENCE TO OUTER EDGE AND ABOUT HALF WAY THROUGH THE THICKNESS OF THE DISK. (K)

2008FA0000875	PIPER		BRAKE DISC	CRACKED
11/18/2008	PA23250		16405700	MLG

THE DISC WAS FOUND DURING ROUTINE MAINTENANCE TO HAVE A RADIAL CRACK EXTENDING FROM APPROX .75 INCH FROM THE OUTER CIRCUMFERENCE TO OUTER EDGE AND ABOUT HALF WAY THROUGH THE THICKNESS OF THE DISC. (K)

2008FA0000874	PIPER	LYC	DISTRIBUTOR	DAMAGED
11/18/2008	PA23250	IO540C4B5	M3820	MAGNETO

SUBJECT PART APPEARS TO HAVE NOT RETAINED ITS LOWER BEARING THAT SUPPORTS THE DISTRIBUTOR GEAR. THE PART WAS FOUND TO BE BURNED AND THE BEARING HOLE MISSING THE BEARING AND ROUNDED OUT WHICH CAUSED THE MAGNETO TO FAIL AND PREVENTED ENGINE STARTUP. JUST PRIOR TO THIS, ENGINE STARTUP HAD BEEN DIFFICULT, HOWEVER, MAG DROP AND PERFORMANCE WERE NORMAL. (K)

2008FA0000857	PIPER	LYC	SHAFT	BROKEN
3/14/2008	PA28161	O320D3G		MAGNETO

ROTATING MAGNET SHAFT BROKE IN HALF. BROKE DIRECTLY BELOW WHERE THE ROTOR CAM GOES. (K)

CA081210003	PIPER	LYC	TUBE	TORN
12/8/2008	PA28161	O320D3G	5005	NLG TIRE

(CAN) THE NOSE WHEEL TIRE INNER TUBE WAS FOUND TORN. THE ACFT SAT OVER NIGHT. THE INNER TUBE HAD 391 HRS SINCE NEW. THE NOSE TIRE WAS INSP, NO DEFECTS FOUND.

CA081106005	PIPER	LYC	BAFFLE	FAILED
10/31/2008	PA28180	O360A4A		MUFFLER

(CAN) POWER LOSS ON TAKEOFF DUE TO BAFFLE FAILURE INSIDE MUFFLER WHICH RESTRICTED EXHAUST OF ENGINE CAUSING PARTIAL POWER LOSS.

2008FA0000868	PIPER		BRACKET	CRACKED
11/21/2008	PA28R201		67271800	NLG ACTUATOR

NOSE GEAR ACTUATOR AFT ATTACH POINT CRACKED. PROBABLE CAUSE IS TIME IN SERVICE. CHANGE AT A REASONABLE TIME. (K)

2008FA0000869	PIPER	LYC	BRACKET	CRACKED
10/29/2008	PA28R201	IO360A1A	67271800	NLG ACTUATOR

NOSE GEAR ACTUATOR AFT ATTACH POINT CRACKED. PROBABLE CAUSE IS TIME IN SERVICE. CHANGE AT A REASONABLE TIME. (K)

CA081208005	PIPER	LYC	BEARING	FAILED
12/8/2008	PA31350	LTIO540J2BD		TURBOCHARGER

(CAN) SHORTLY AFTER TAKE-OFF THE PILOT HEARD A "BANG" FROM THE RT ENGINE AND NOTICED A LOSS OF MANIFOLD PRESSURE. HE THEN RETURNED TO THE AIRPORT WITH NO PROBLEMS ENROUTE. MX FOUND THE TURBO CHARGER SHAFT BEARING HAD FAILED. THE TURBO CHARGER WAS REPLACED, OIL SUMP CLEANED, OIL FILTER REPLACED AND GROUND RUN ACCEPTABLE.

CA081112006	PIPER	LYC	TUBE	FLAT
11/6/2008	PA31350	LTIO540J2BD	40140	MLG TIRE

(CAN) AFTER LANDING, IT WAS NOTICED THAT THE NOSEWHEEL WAS FLAT. DISASSEMBLY OF THE NOSEWHEEL

HUB SHOWED A POSSIBLE WEAR SPOT BETWEEN THE TIRE AND TUBE. THE TUBE WAS DAMAGED DURING THE LANDING AND TAXI SO IT IS NOT KNOWN IF THIS WAS THE ACTUAL CAUSE OF THE PROBLEM.

CA080930008	PIPER	LYC	SEAL	LEAKING
9/29/2008	PA31350	TIO540J2BD		TURBOCHARGER

(CAN) PILOT SAW THICK BLUE SMOKE FROM LT ENG JUST AFTER LANDING AT HOME BASE. OIL PRESSURE INDICATIONS APPEARED NORMAL. DURING INVESTIGATION FOUND LT TO BE 5 QUARTS LOW ON OIL, WITH NO VISIBLE EXTERNAL LEAKS. CYL COMPRESSION CHECK SHOWED NO FAULTS. TURBO CHARGER EXHAUST PIPE SHOWED WET OIL ON INSIDE OF EXIT PIPE. PIPE REMOVED FROM TURBOCHARGER AND FOUND OIL STAIN IN EXHAUST TURBINE. REPLACED TURBO AND GROUND CHECKED SERVICEABLE. NO FAULTS REPORTED AFTER SUBSEQUENT FLIGHTS.

2008FA0000843	PIPER	LYC	COWLING	BROKEN
11/10/2008	PA32300	IO540*		ZONE 400

AFTER LIFTOFF, AT APPROX 250 TO 300 FEET AGL THE RT SIDE OF THE UPPER ENGINE COWLING CAME LOOSE AND BROKE OFF AT APPROX THE MIDDLE LT PORTION OF THE COWLING, FALLING TO THE GROUND. THE ACFT HAD UNDERGONE A 100 HOUR INSP ON THE ENGINE AT 6905.8 HRS. OWNER STATED NO ADDITIONAL MAINT SINCE THAT TIME.

CA081024001	PIPER	LYC	TRUNNION	CRACKED
10/24/2008	PA32R300	IO540K1G5D	6705403	NLG

(CAN) FOUND GREASE LEAKING FROM TOP PORTION OF THE LWR BRG SUPPORT. CLEANED AREA AND RE GREASED TRUNNION. GREASE WAS FOUND COMING OUT OF CRACK. THE CRACK IS APPROXIMATELY ONE INCH LONG, HORIZONTAL. THIS CRACK INDICATION DOES APPEAR TO BE CAUSED BY IMPROPER GROUND HANDLING. STEPS ARE BEING TAKEN TO REPLACE PART AT THIS TIME.

CA081113006	PIPER	LYC	WHEEL	CRACKED
11/7/2008	PA34200	IO360C1E6	06104700	MLG

(CAN) DURING A TIRE CHANGE, THE AME NOTICED A 4 INCH CRACK ALONG THE WHEEL, WHERE THE TIRE BEAD SITS. THIS TYPE OF FINDING IS RATHER UNUSUAL AT THE AMO. NO HARD OR UNUSUAL LANDINGS WERE REPORTED. THE WHEEL HALF WAS REPLACED, AND THE ACFT RETURNED TO SERVICE.

CA081107001	ROBSIN		MOUNT	CRACKED
11/4/2008	R22BETAII		B1741	FAN WHEEL ASSY

(CAN) AT REINSTALLATION OF FANWHEEL ASSEMBLY, FOUND TAPERED MOUNTING FLANGE COMPLETELY CRACKED LONGITUDINALLY. UNIT SENT TO MANUFACTURER FOR WARRANTY EXCHANGE.

CA081107006	ROBSIN	LYC	ACTUATOR	MALFUNCTIONED
10/29/2008	R44	O540F1B5	C0511	CLUTCH

(CAN) CLUTCH ACTUATOR REMOVED DUE TO FAULTY SWITCHES.

CA081110006	ROBSIN	LYC	RELAY	FAILED
10/30/2008	R44	O540F1B5	B4151	BATTERY

(CAN) BATTERY WOULD NOT COME ONLINE ALTHOUGH FULL BATTERY VOLTAGE WAS OBSERVED AT BATTERY CONNECTIONS. BATTERY RELAY WAS REPLACED AND ACFT RETURNED TO SERVICE.

CA080927001	ROBSIN	LYC	PISTON RING	BROKEN
9/26/2008	R44	O540F1B5	130L119	ENGINE

(CAN) PILOT REPORTED ENGINE ROUGH AT 80 PERCENT RPM. ACFT WAS GROUNDED AND A COMPRESSION CHECK WAS CONDUCTED. CYLINDER 1 WAS FOUND TO HAVE 58/80 PSI. CYLINDER AND PISTON REMOVED AND COMPRESSION RING WAS FOUND CRACKED. PISTON/CYLINDER REPLACED. ACFT RETURNED TO SERVICE.

CA080929006	ROBSIN	LYC	CLUTCH	INOPERATIVE
9/29/2008	R44RAVENII	IO540AE1A5	C0183	MAIN ROTOR

(CAN) THE C188-3 SPRAG S/N S164 REV G HAS 2 PEANUTS WITH 5 BROKEN EARS. C166-4 SHAFT SPRAG JOURNAL WORN UNDERSIZE, C167-3 HOUSING SPRAG JOURNAL WORN OVERSIZE.

CA080905006	ROBSIN	LYC	GOVERNOR	FAILED
9/4/2008	R44RAVENII	IO540AE1A5	B2475	ENGINE

(CAN) PILOT WAS LANDING THE ACFT AND THE RPM DROPPED DUE TO THE GOVERNOR NOT HOLDING THE REQUIRED RPM, GOVERNOR REPLACED.

CA081105010	ROBSIN	LYC	ANGLE	CRACKED
11/5/2008	R44RAVENII	IO540AE1A5	C8303	ELT MOUNT

(CAN) FOUND CRACKED ANGLE DURING INSPECTION OF ELT MOUNT.

CA081107002	ROBSIN	LYC	ANGLE	SHEARED
11/4/2008	R44RAVENII	IO540AE1A5	C8303	ELT MOUNT

(CAN) THE ANGLE USED AS PART OF ELT INSTALLATION WAS FOUND SHEARED DURING 2200 HR OVERHAUL TEARDOWN.

CA081107004	ROBSIN	LYC	MAGNETO	INTERMITTENT
10/26/2008	R44RAVENII	IO540AE1A5	106006169	ENGINE

(CAN) MAGNETO INTERMITTENT.

CA081107005	ROBSIN	LYC	MAGNETO	INTERMITTENT
10/26/2008	R44RAVENII	IO540AE1A5	1060064620	ENGINE

(CAN) MAGNETO INTERMITTENT.

CA081210013	ROBSIN	LYC	MAGNETO	UNSERVICEABLE
11/28/2008	R44RAVENII	IO540AE1A5	BL600646201	ENGINE

(CAN) MAGNETO FOUND U/S.

CA080626001	ROBSIN	LYC	PUMP	LEAKING
6/19/2008	R44RAVENII	IO540AE1A5	LW15473	FUEL SYS

(CAN) OIL LEAK NOTICED PRIOR TO ANNUAL INSP. OIL WAS LEAKING OUT THE VENT LINE FROM THE FUEL PUMP. REMOVED PUMP, REMOVED FUEL VENT FITTING, FOUND VENT CHAMBER FULL OF ENGINE OIL. REPLACED WITH NEW PUMP.

CA081030004	ROBSIN	LYC	EXHAUST DUCT	DEFORMED
3/13/2008	R44RAVENII	IO540AE1A5	C1693	ENGINE

(CAN) VISUAL INSP (CF90-03R2) FOUND DEFORMATION AND CRACK IN MUFFLER ASSY AT THE BASE OF THE EXHAUST PIPE WITH SUBSEQUENT LEAK OF EXHAUST GASES INTO CABIN HEAT SYS, NO CO WARNING LIGHTS OR PILOT REPORTS POSTED. PART REPLACED AS REQ`D.

CA081028005	ROBSIN	LYC	STARTER GEN	DISENGAGED
10/22/2008	R44RAVENII	IO540AE1A5	14924HTH	ENGINE

(CAN) STARTER WOULD NOT ENGAGE THE RING GEAR.

CA080904003	ROBSIN	LYC	SPRAG CLUTCH	DAMAGED
9/1/2008	R44RAVENII	IO540AE1A5	C1883	MAIN ROTOR

(CAN) UNTIL THE OFFICIAL REPORT ARRIVES, THIS IS WHAT IS DETERMINED HAPPENED. DURING TAKEOFF THE PILOT EXPERIENCED A LOUD NOISE AND THEN ACFT YAWED SLIGHTLY. THE ACFT LANDED WITHOUT INCIDENT. THE CLUTCH WAS REPLACED AND ACFT RETURNED TO SERVICE. DETAILS WILL BE BROUGHT FORWARD ONCE THE CLUTCH IS DISASSEMBLED AND A TEAR DOWN REPORT IS AVAILABLE.

CA081001002	SAAB		TERMINAL	MELTED

9/30/2008	340B			EXTERNAL POWER

(CAN) ACFT ARRIVED FROM CUSTOMER WITH EXTERNAL POWER INOP (MEL). AFTER INVESTIGATION, FOUND THE + TERMINAL MELTED AT THEN EXT PWR CONNECTOR. SHEET METAL REPAIR WAS PREVIOUSLY DONE AT THE EXT PWR CONNECTOR ATTACHMENT. BOTH TERMINALS WERE CRACKED HALF WAY.

2008FA0000863	SCWZER	ALLSN	PINION GEAR	WORN
11/10/2008	269D	250C20W	269A510351	TRANSMISSION

DURING SHUT-DOWN, PILOTS REPORTED CLUNKING NOISE. UPON FURTHER INSPECTION, NOISE WAS LOCATED AT UPPER PULLEY SPRAG CLUTCH AREA. REMOVED UPPER PULLEY AND FOUND M/R TRANSMISSION INPUT PINION (PN:269A5103-51) WORN EXCESSIVELY DUE TO LOOSE AFT PINION NUT. PROBABLE CAUSE OF AFT PINION NUT LOOSENING IS SB DB-019 (CORROSION PROTECTION OF INPUT PINION SPLINES). POSSIBLE EXCESSIVE APPLICATION OF ZINC-CHROMATE PRIMER TO INPUT PINION CAUSED IMPROPER CLAMP-UP DURING TORQUING PROCEDURE. (K)

CA081114004	SKRSKY		GEARBOX	MAKING METAL
11/3/2008	S61N		S613522032001	MAIN ROTOR

(CAN) MGB HAD A INDICATION ON THE MGB BEING CONTAMINATED WITH METAL. REMOVED THE MGB AND RETURNED IT TO MANUFACTURER WHO DISASSEMBLED THE MGB TO FIND THAT THE CAUSE OF THE METAL CONTAMINATION WAS FROM THE UPPER BRG SUPPORT NUT, P/N: S6135-22032-001 THE CAUSE OF THE METAL CONTAMINATION WAS FROM THE UPPER BRG SUPPORT NUT.

CA080925007	SKRSKY	PWA	FUEL CONTROL	FAILED
9/8/2008	S64E	JFTD12A4A		

(CAN) LIGHT A SCAN OF THE ENG GAUGES REVEALED THE NR 2 ENGINE HAD LOW N1 RPM WITH A CLIMBING T5 TEMP. FLIGHT CREW IDENTIFIED THE PROBLEM AS AN ENG ROLL BACK AND ONCE THE LOAD WAS SAFELY JETTISONED A SHUTDOWN OF THE NR (2) ENGINE WAS CARRIED OUT. THE ACFT THEN RETURNED TO IT`S SERVICE LANDING AND MADE AN SINGLE ENGINE LANDING. A POST FLIGHT INSP OF THE T5 RECORDING SYS REVEALED THE ENGINE TEMP HAD REACHED 798 DEGREES C. THE ENG, FREE TURBINE ASSY AND FCU WERE REPLACED AND AFTER A COMPLETE GROUND CHECK ACFT WAS RETURNED TO SERVICE. THE ENG, FREE TURBINE AND FCU WERE RETURNED TO MFG FOR AN OVER TEMP INSP AND EVALUATION AS TO A POSSIBLE CAUSE OF THE ROLL BACK.

CA080925006	SKRSKY	PWA	ENGINE	MALFUNCTIONED
9/8/2008	S64E	JFTD12A4A		NR 2

(CAN) WHILE DEPARTING AREA WITH AN AIRSPEED OF 30 TO 40 KNOTS AND A 500 FT PER MINUTE RATE OF DESCENT, NR 2 ENGINE N1 LOW RPM AUDIO HORN SOUNDED ALONG WITH ILLUMINATION OF NR 2 ENGINE LOW OIL PRESSURE LIGHT. A SCAN OF THE ENGINE GAUGES REVEALED THE NR 2 ENGINE HAD LOW N1 RPM WITH A CLIMBING T5 TEMP. THE FLIGHT CREW IDENTIFIED THE PROBLEM AS AN ENG ROLL BACK AND ONCE THE LOAD WAS SAFELY JETTISONED, A SHUTDOWN OF THE NR 2 ENGINE WAS CARRIED OUT. THE ACFT THEN RETURNED TO ITS SERVICE LANDING AND MADE AN SINGLE ENGINE LANDING. A POST FLIGHT INSPECTION OF THE T5 RECORDING SYS REVEALED THE ENGINE TEMP HAD REACHED 798 DEGREES C. THE ENGINE, FREE TURBINE ASSY AND FCU WERE REPLACED AND AFTER A COMPLETE GROUND CHECK THE ACFT WAS RETURNED TO SERVICE. THE ENGINE, FREE TURBINE AND (FCU) WERE RETURNED TO MFG FOR AN OVER TEMP INSP AND EVALUATION AS TO A POSSIBLE CAUSE OF THE ROLL BACK.

CA081105002	SKRSKY	PWA	ENGINE	OVERTEMP
9/8/2008	S64E	JFTD12A4A		

(CAN) WHILE DEPARTING AREA WITH AN AIRSPEED OF 30 TO 40 KNOTS AND A 500 FT PER MINUTE RATE OF DESCENT, NR 2 ENG N1 LOW RPM AUDIO HORN SOUNDED ALONG WITH ILLUMINATION OF NR 2 ENG LOW OIL PRESSURE LIGHT. A SCAN OF ENG GAUGES REVEALED NR 2 ENG HAD LOW N1 RPM WITH A CLIMBING T5 TEMP. FLT CREW IDENTIFIED PROBLEM AS AN ENG ROLL BACK AND SHUTDOWN OF NR 2 ENGINE CARRIED OUT. ACFT THEN RETURNED TO LANDING AREA AND MADE AN SINGLE ENG LANDING. A POST FLT INSP OF T5 RECORDING SYS REVEALED ENGINE TEMP HAD REACHED 798 DEGREES C. ENGINE, FREE TURBINE ASSEMBLY AND FUEL CONTROL UNIT REPLACED AND AFTER A COMPLETE GROUND CHECK ACFT RETURNED TO SERVICE. ENGINE, FREE TURBINE AND FUEL CONTROL UNIT WERE RETURNED FOR AN OVER TEMP INSP AND EVALUATION AS TO A

POSSIBLE CAUSE OF THE ROLL BACK.

CA081023004	SKRSKY	ALLSN	THERMOSTAT	UNSERVICEABLE
10/16/2008	S76A	250C30S	28E251	NR 2 OIL COOLER

(CAN) THERMOSTAT STUCK AND ENGINE OIL TEMP 8 EXCEEDED RED LINE LIMIT.

2008F00025	SKRSKY		PROBE	MALFUNCTIONED
11/13/2008	S76C			FIRE WARNING

NUMBER 2 ENGINE HAD A FIRE CAUTION WARNING LIGHT ILLUMINATE WITH HORN FOR TWO SECONDS. THIS OCCURRED TWICE DURING THE FLIGHT. WHEN THE MECHANICS TRIED TO TROUBLESHOOT THE PROBLEM, COULD NOT DUPLICATE IT. TO FURTHER TROUBLESHOOT, THE AFT NR 1 & 2 FIRE PROBES P/N 76306-07902-104 WERE SWAPPED TO SEE IF THE PROBLEM RE-OCCURRED AND FOLLOWED THE PROBE.

CA081024002	SKRSKY	GE	HEAT EXCHANGER	CRACKED
10/21/2008	S92A	CT78A	9265004900101	HYD SYSTEM

(CAN) ENROUTE AT 7000 FT, ACFT STARTED TO NOD UNCHARACTERISTICALLY. IT WAS NOTED THAT THE NR 1 HYD SYS PRESSURE WAS HIGH (IN THE RED). DECISION TO RETURN MADE AND NR 1 HYD SYS DE-SELECTED BUT PRESSURE REMAINED HIGH. NO OTHER ADVISORY/CAUTION LIGHTS WERE ON AT THIS POINT. ABOUT 10 MINUTES AWAY FROM DESTINATION, PRESSURE DROPPED AND "HYD NR 1 RESEV LOW" LIGHT CAME ON FOLLOWED BY M/R AND T/R SERVO NR 1 PRESS, HYD NR 1 PUMP FAIL, PSAS PRESS AND AUTO-PILOT FAIL LIGHTS. EMERGENCY CHECKLIST CONSULTED AND CARRIED OUT. ACFT LANDED AND SHUTDOWN WITH NO FURTHER INCIDENT. PAX WERE BRIEFED IN-FLT AND AT SHUTDOWN. THE HYD NR 1 SIDE OF THE RT HEAT EXCHANGER FOUND TO HAVE CRACK AT BOTTOM OF HSG. NR 1 HYD SYS DRAINED OUT ALL OIL. HEAT EXCHANGER REPLACED. GROUND RUN LEAK CHECK C/W. NO FAULTS.

CA081020004	SNIAS		BRACKET	CRACKED
10/2/2008	AS350*		350A21136324	TAIL ROTOR

(CAN) A US OPERATOR HAS REPORTED 7 CASES OF THE RT TAIL ROTOR BELLCRANK MOUNTING BRACKET CRACKING. ALL THESE ACFT HAVE LIMITED LT PILOT MODIFICATION STC SH96-32 (FAA STC SR00429NY). LIMITED HAS ISSUED A SB ECL-122 REQUIRING AN INSP BEFORE NEXT FLIGHT REPEATED AT 50 HOURS THEN EVERY 100 HOURS.

CA081107008	SNIAS	LYC	BALL JOINT	DEFECTIVE
11/4/2008	AS350*	LTS101*	117775P	STARFLEX

(CAN) IT WAS DISCOVERED DURING A DAILY INSP THAT THE TEFLON LINING INSIDE ONE OF THE STARFLEX BALL JOINTS WAS DISPLACED. THE BEARING WAS REPLACED BEFORE FURTHER FLIGHT AND IT WAS NOTICED THAT THE TEFLON WAS STILL GLUED FIRMLY IN PLACE BUT IT WAS MISALIGNED FROM ITS ORIGINAL POSITION.

CA081119003	SNIAS	TMECA	BEARING	BLOCKED
11/18/2008	AS350B	ARRIEL1B	0292507350	ENGINE

(CAN) OIL WAS COMING OUT OF TURBINE EXHAUST AND M03 BEARING VENT TUBE ON START UP. DISASSEMBLED THE ENGINE AND FOUND M03 REAR BEARING CAKED WITH BURNED OIL. M03 REAR BEARING OIL RETURN TUBE PARTIALLY BLOCKED WITH BURNED OIL.

CA081120007	SNIAS	SNIAS	STOP	CRACKED
11/19/2008	AS350B1		350A37116200	ROTOR SHAFT

(CAN) CRACK DETECTED IN 2 OF THE 3 YOKE, STOP, ASSYS ON THE MAST. FOUND DURING A 6 YEAR CORROSION INSPECTION OF THE MAST. THE PARTS WERE SENT FOR NDT AS PART OF THE AVIATION INSP PROCEDURES FOR THE MAST ASSY (NO MFG REQUIREMENT IN THE TECHNICAL PUBLICATIONS TO NDT THESE PARTS). CRACK NOTED IN THE SECOND RADIUS FROM THE TOP.

CA081120006	SNIAS	LYC	STOP	CRACKED
11/19/2008	AS350B2	LTS101*	350A37116200	MAIN ROTOR

(CAN) CRACK DISCOVERED ON 2 OF THE 3 YOKE, STOP, ASSYS REMOVED FROM THE ACFT DURING NDT. THE

CRACKS ARE ALLONG THE SECOND RADIUS FROM THE TOP, AND WERE NOT VISIBLE TO THE NAKED EYE.

CA081121012	SNIAS	TMECA	COUPLING SLEEVE	WORN
11/20/2008	AS350B2	ARRIEL1D1	S40	HYD PUMP

(CAN) DURING DISASSEMBLY FOR OTHER WORK THE HYD PUMP WAS REMOVED AND THE SPLINE DRIVE WAS FOUND EXTREMELY WORN. PART S40 WAS FOUND TO HAVE ALMOST NO SPLINE AT ALL REMAINING AND THE JOINING HYD PUMP PN A5026780 HAD IT`S SPLINES WORN TO HALF THEIR NORMAL WIDTH. THERE IS ALREADY AN AD CF2004-10 AND AN SB 29.00.04 ON THIS ISSUE. ESTIMATED TIME TO FAILURE OF HYD DRIVE WAS LESS THAT 100 HOURS.

CA081117004	SNIAS	TMECA	BEARING RACE	CRACKED
11/14/2008	AS350B2	ARRIEL1D1	ASNA013735E2	INNER R ACE

(CAN) A 12 YEAR INSP WAS BEING CARRIED OUT ON THE HELICOPTER. 2 CRACKS WERE FOUND ON THE INNER RACE OF A BALL BEARING ASSY. THE CRACKS ORIGNALLY STARTED FROM THE RIVET HOLES. THE BEARING ASSY/SUPPORT ATTACH THE INNER RACE OF BEARING BY 4 RIVETS TO THE PILOT`S CYCLIC FOR AND AFT TORQUE TUBE LOCATED UNDER THE CABIN FLOOR. THIS IS THE SECOND 12 YEAR INSPECTION FOR THIS HELICOPTER.

CA080611006	SNIAS	TMECA	ENGINE	MAKING METAL
5/25/2008	AS350B2	ARRIEL1D1	0292005220	

(CAN) WHILE DOING AIRBORNE SURVEY WORK (BIRD TOWING), ENGINE CHIP LIGHT ILLUMINATED. HELICOPTER DESCENDED TO VALLEY BOTTOM AND MADE A PRECAUTIONARY LANDING. UPON LANDING, THE ENGINE MOMENTARILY DECELLERATED AND THEN RE-ACCELERATED. ENGINE WAS SHUTDOWN AND RAPIDLY DECELERATED ACOMPANIED BY A GRINDING/RUBBING NOISE. POST FLIGHT INSPECTION REVEALED A LARGE AMOUNT OF METAL CHIPS ON THE ENGINE CHIP PLUGS. ENGINE REMOVED AND SENT TO MFG FOR FURTHER INVESTIGATION.

CA080601001	SNIAS	TMECA	MODULE	NOISY
5/21/2008	AS350B2	ARRIEL1D1	70BM035420	ENGINE

(CAN) SQEALING NOISE COMING FROM ENGINE. SHUTDOWN AFTER FLIGHT, SUSPECT TURBINE BLADE RUB. MODULE 2 AND MODULE 3 REMOVED AND SENT TO MFG.

CA080606008	SNIAS	TMECA	CONTROL LEVER	INCORRECT
5/30/2008	AS350B2	ARRIEL1D1	350A57147620	FCU

(CAN) GOVERNOR LEVER P/N 350A57-1476-20 WAS FOUND ON FCU WHERE LEVER P/N 350A57-1472-20 SHOULD HAVE BEEN. UPON CONFIRMATION WITH MFG THIS WAS CONFIMED. AS THIS ACFT CAME TO US, ON B2 S/N 1685 WE ASSUMED THAT THE INSTALLATION WAS CORRECT. THE RIGGIN WAS WAY OUT AND WE COULD NOT REACH THE REQUIRED RPM. LEVER WAS REPLACED, RIGING WAS CARRIED OUT AND THE ACFT WAS RETURNED TO SERVICE.

CA080722005	SNIAS	TMECA	TMECA	STOP	CRACKED
7/16/2008	AS350B2	ARRIEL1D1		350A37122021	M/R SHAFT

(CAN) ON ROUTINE MAST RECONDITIONING AND INSP (6 YEAR INSP REQUIREMENT), THE RING WAS SENT FOR NDT ALONG WITH THE REST OF THE PARTS FROM THE ASSY (NO NDT REQUIREMENT FOR THE RING AT ANY POINT, OR FOR ANY PART OF THE ASSY AT THE 6 YEAR INSP). THERE WAS A STRESS CRACK DURING MPI CHECK, WHICH WAS CAUSE FOR REJECTION OF THE PART. THE RING IS LOCATED AT THE TOP OF THE MAIN ROTOR SHAFT, WHERE THE ROTOR HEAD ATTACHES, AND ROTATES WITH THE MAIN ROTOR SHAFT/HEAD. THE CUSTOMER WAS NOTIFIED OF THE DEFECT AND THE PART WAS REPLACED.

CA081020008	SWRNGN	GARRTT	WINDSHIELD	CRACKED
10/9/2008	SA226T	TPE3311	2621126005	COCKPIT

(CAN) DURING CRUISE FLIGHT THE LT COCKPIT WINDSHIELD GLASS CRACKED WITH AN EXPLOSIVE BANG. THE CREW IMMEDIATELY DESCENDED AND REDUCED CABIN PRESSURE TO AVOID THE POSSIBILITY OF THE WINDOW GLASS BLOWING OUT. THE WINDOW WAS INSTALLED ON APRIL 11, 2006 AND HAD A TOTAL OF 177 HOURS SINCE

OVERHAUL AND INSTALLATION. THE ACFT WAS IN THE USA AT THE TIME OF THE OCCURRENCE AND THE ACFT WAS FLOWN TO ITS INTENDED DESTINATION AS IT WAS ONLY ABOUT 30 MINUTES FROM THE DESTINATION AT THE TIME OF OCCURRENCE. THE WINDOW WAS REPLACED BY APPROPRIATELY RATED FAA REPAIR STATION. THE WINDOW WILL BE SENT TO THE MANUFACTURER FOR WARRANTY AND EXAMINATION.

CA081124004	SWRNGN	GARRTT	SWITCH	FAILED
11/17/2008	SA226TC	TPE33110U	MS243314	INTERNAL

(CAN) DURING AN ATTEMPTED ENGINE START THE CREW WAS UNABLE TO GET ENGINE ROTATION OR LIGHT OFF. MX INVESTIGATED AND DETERMINED THE MLG SAFETY MICROSWITCH WHICH CONTROLS THE AIR/GROUND PORTION OF THE ENGINE START CONTROL SYS TO BE INOPERATIVE. MX REPLACED THE SWITCH AND RETURNED THE ACFT TO SERVICE.

CA081124005	SWRNGN	GARRTT	SWITCH	FAILED
11/20/2008	SA226TC	TPE33110UA	1EN516	NLG

(CAN) THE CREW COULD NOT GET A NOSE GEAR DOWN AND LOCKED INDICATION AFTER SEVERAL DOZEN GEAR POSITION CYCLES OR WITH MANUAL GEAR EXTENSION. WITH THE LAST ATTEMPT IT ILLUMINATED WITH ELECTRICAL SELECTION. EMERGENCY SERVICES AT AIRPORT WERE ON STANDBY. THE ACFT LANDED AND MX DISCOVERED THAT ONE OR BOTH OF THE NOSE LANDING GEAR DOWNLOCK SWITCHES WAS INOPERATIVE. MX REPLACED BOTH SWITCHES AS A PRECAUTION AND GEAR FUNCTIONAL CHECKS COMPLETED. NO FURTHER PROBLEMS WITH THE LANDING GEAR SYS HAVE OCCURED.

CA081124006	SWRNGN	GARRTT	SWITCH	FAILED
11/21/2008	SA226TC	TPE33110UA	1EN516	NLG

(CAN) ON APPROACH TO LAND THE FLIGHT CREW COULD NOT GET THE GREEN DOWN AND LOCKED LIGHT FOR THE NLG TO ILLUMINATE. THE GEAR WAS CYCLES SEVERAL TIMES AND THE EMERGENCY GEAR EXTENSION USED. AFTER SEVERAL MINUTES THE NOSE GEAR DOWN AND LOCKED GREEN LIGHT ILLUMINATED AND THE ACFT LANDED WITHOUT FURTHER INCEDENT. MX TRACED THE PROBLEM TO A INOPERATIVE NOSE LANDING GEAR DOWNLOCK MICRO SWITCH. BOTH DOWNLOCK MICROSWITCHES WERE REPLACED AS A PRECAUTION AND THE LANDING GEAR FUNCTION TESTED. THERE HAS BEEN NO FURTHER RECURRANCE OF THIS ISSUE.

CA081124003	SWRNGN	GARRTT	SWITCH	FAILED
11/21/2008	SA226TC	TPE33110UA	MS243314	MLG

(CAN) AFTER TAKEOFF CREW WAS UNABLE TO RETRACT THE ACFT LANDING GEAR. THE CREW ELECTED TO RETURN TO AIRPORT OF ORIGIN AND CONTACT MX. THE ACFT WAS FERRIED HOME WITH THE GEAR DOWN. UPON INSP FROM MX, THE MLG SAFETY SWITCH WHICH CONTROLS THE AIR/GROUND PORTION OF THE LANDING CONTROL SYS WAS FOUND TO BE INOPERATIVE. MX CHANGED THE SWITCH AND THE GEAR FUNCTIONED CHECKED SERVICEABLE. TOTAL TIME ON THE SWITCH COULD NOT BE DETERMINED.

CA081117003	SWRNGN	GARRTT	IGNITION SWITCH	CRACKED
11/13/2008	SA227AC	TPE3311	31057463	COCKPIT

(CAN) ACFT DEPARTED AIRPORT AND CREW NOTICED SMOKE IN THE CABIN. THE CREW TURNED THE TEMP CONTROLLER OFF - THE BLEEDS WERE TURNED OFF WHICH DUMPED THE CABIN PRESSURIZATION. THE LOW OIL PRESSURE LIGHT CAME ON ALONG WITH THE EGT STARTING TO RISE. ENGINE WAS THEN SHUTDOWN AND FEATHERED AT THIS POINT. ACFT RETURNED TO POINT OF ORIGIN AND LANDED WITHOUT INCIDENT. MX WAS CONTACTED AND THEY DISCOVERED THE AUTO IGNITION SWITCH WAS CRACKED ALLOWING THE ENGINE OIL TO BLEED OUT OF THE ENGINE. THE SWITCH WAS REPLACED - GROUND RUNS CARRIED OUT IAW EMM AND ACFT RETURNED TO SERVICE.

CA081020009	SWRNGN	GARRTT	TIRE	SEPARATED
10/7/2008	SA227AC	TPE33110U	196K089	MLG

(CAN) DURING GROUND HANDLING PROCEDURES THE NR2 MAIN WHEEL WAS FOUND TO BE SHREDDED AND THE TREAD PORTION OF THE TIRE MISSING. THIS TIRE WAS A RECAPPED TIRE RECEIVED FROM A CERTIFIED FAA REPAIR STATION. THE TIRE WHEN IT SHREDDED CAUSED DAMAGE TO THE ACFT FLAP AND SURROUNDING WW WHICH REQUIRED REPLACEMENT OF THE FLAP AND REPAIR OF THE WW AREA. MAINT REPAIRED THE ACFT AND REPLACED THE TIRE.

CA081114005	SWRNGN	GARRTT	IMPELLER	CRACKED
11/4/2008	SA227AC	TPE33111U	8934825	COMPRESSOR

(CAN) HOT SECTION INSPECTION WAS BEING CARRIED OUT BY ENGINE SHOP ON ENGINE SN P44659C AND IT WAS NOTED THAT THE IMPELLER WAS CRACKED. THIS IMPELLER IS NOT TRACKED. THE TIMES ON THE IMPELLER SINCE INSTALL ARE 2407.0 AND 3434 CYCLES. THIS IS NOT THE 1ST INSTANCE OF PROBLEMS IN THIS 2ND STAGE IMPELLER.

CA081103005	SWRNGN	GARRTT	IGNITION SWITCH	CRACKED
10/30/2008	SA227AC	TPE33111U	31057463	ENGINE

(CAN) OIL LEAK ON THE ENG FROM LWR ENG COWL FOUND. TROUBLESHOOTING REVEALED THE PROBLEM AS A AUTO IGNITION PRESSURE SWITCH LEAKING AT THE BASE WELD. INSP WITH A MAGNIFYING GLASS FOUND A CRACK APR .7500 AROUND THE CIRCUMFERENCE OF THE WELD.

CA081112003	UROCOP	TMECA	PRESSURE SWITCH	FAILED
10/30/2008	EC120B	ARRIU2F	9550170290	ENGINE

AFTER A LANDING AND COOLDOWN THE PILOT PRESSED THE START/DETENT SWITCH TO MOVE THE TWIST GRIP TO CUTOFF. THE ENGINE IMMEDIATELY FLAMED OUT WHEN THE SWITCH WAS DEPRESSED (TWIST GRIP WAS NOT TURNED). THEN ATTEMPTED TO RECREATE THIS PROBLEM AND IT HAPPENED AT ALL ENGINE SPEEDS. AFTER TROUBLESHOOTING IT WAS DETERMINED THAT THE P3 PRESSURE SWITCH WAS THE PROBLEM.

CA081001006	UROCOP	TMECA	WIRE	SHORTED
9/24/2008	EC130B4	ARRIEL2B1	GNS430	COMM 1

(CAN) NO PILOT OR COPILOT SIDE TONE ON COMM 1. TECH FOUND THE AUDIO PHONE WIRE SHORTED BY THE SHIELDING. REPAIRED AND SIDE TONES WERE RETURNED TO NORMAL.