VOLUME 2 AIR OPERATOR AND AIR AGENCY CERTIFICATION AND APPLICATION PROCESS

CHAPTER 11 CERTIFICATION OF A PART 145 REPAIR STATION

Section 6 Safety Assurance System: Part 145 Repair Station Ratings and Classifications Under 14 CFR Part 145, §§ 145.59 and 145.61

2-1257 REPORTING SYSTEM(S). Use Safety Assurance System (SAS) automation and the associated Data Collection Tools (DCT) for certification.

2-1258 PURPOSE. The purpose of this section is to explain the ratings contained in Title 14 of the Code of Federal Regulations (14 CFR) part 145, §§ 145.59 and 145.61.

NOTE: Ratings specify the types of articles the repair station is rated to perform maintenance, preventive maintenance, or alterations. They specify what the repair station is allowed to do. Ratings exist as a means of authorizing repair stations to perform maintenance and alterations. A repair station may only perform the maintenance, preventive maintenance, or alterations for which it is rated. Repair stations should not receive ratings solely to maintain aircraft, engines, propellers, or component part (article) not approved under a Federal Aviation Administration (FAA) Type Certificate Data Sheet (TCDS), such as certain military aircraft, engines, or components. Specific ratings issued to a repair station are dependent on the equipment, personnel, technical data, and housing and facilities of the repair station. Depending on how a repair station intends to perform maintenance, it may require multiple and/or different ratings.

2-1259 GENERAL. Certificated repair stations are authorized to perform maintenance, preventive maintenance, and alterations on products that have an approved FAA TCDS, or used on aircraft with an approved TCDS. Section 145.201(a)(1) requires a repair station to perform maintenance in accordance with 14 CFR part 43. Part 43, § 43.1(a) states, in part, that "this part prescribes rules governing the maintenance, preventative maintenance, rebuilding, and alteration of any—(1) aircraft having a U.S. airworthiness certificate..." Repair stations should not receive ratings to maintain noncertificated products or those products not approved under 14 CFR part 21, such as certain military aircraft, engines, or components.

A. Adding or Removing an Article to an Existing Limited Rating.

1) Adding or removing an article to an existing limited rating is an amendment to the rating, not an added rating. This requires the repair station to make application to the FAA, listing by type, make, or model, as appropriate, each article under an existing rating.

2) The Air Agency Certificate (FAA Form 8000-4) will not change. An amendment to the rating will require submission of FAA Form 8310-3, Application for Repair Station Certificate and/or Rating. Once acceptable to the aviation safety inspector (ASI), the application is finalized and operations specifications (OpSpecs) are revised to authorize the addition or removal of an article. For example:

UNCONTROLLED COPY WHEN DOWNLOADED
Check with FSIMS to verify current version before using

a) A repair station currently holds a limited airframe rating, limited to Cessna 150 series aircraft, and would like to add Piper PA-28 series aircraft.

b) The repair station submits FAA Form 8310-3 to the CHDO with the request to add the Piper aircraft (block 2 checked "Other" explaining the reason).

c) The ASI verifies that the repair station meets all of the applicable requirements for the new make/model/series (M/M/S) aircraft. The Piper PA-28 aircraft is added to the OpSpecs under the limited airframe rating. The Air Agency Certificate would not change. The limitation section in OpSpecs should carefully be reviewed to depict any limitations the repair station is not capable of performing to avoid any unintended authorizations.

B. Adding or Removing a Rating to the Air Agency Certificate.

1) Adding or removing a rating to an Air Agency Certificate requires changing the ratings on the Air Agency Certificate and OpSpecs. This requires the repair station to make application to the FAA, listing by type, make, or model, as appropriate, each article under the new rating(s).

2) The Air Agency Certificate (FAA Form 8000-4) is required to be reissued. The repair station will require submission of FAA Form 8310-3. Once acceptable to the ASI, the application is finalized and the Air Agency Certificate and OpSpecs are issued with the new rating(s) to authorize the addition/removal of article(s). For example:

a) A repair station currently holds a limited airframe rating and would like to add a limited engine rating.

b) The repair station submits FAA Form 8310-3 to the CHDO with the request to add the limited engine rating (block 2 checked "Change in Rating," block 3 checked for the limited engine rating).

c) The ASI verifies that the repair station meets all of the applicable requirements for adding the engine rating for the new M/M/S engine(s). The Air Agency Certificate will be issued to include the limited engine rating. The date of the issuance in parentheses will follow the added rating. The OpSpecs will be amended to add the limited engine rating with the M/M/S and appropriate limitations. The limitation section in OpSpecs should carefully be reviewed to depict any limitations the repair station is not capable of performing to avoid any unintended authorizations.

NOTE: Air agency Certificates and OpSpecs are legal documents. Language should clearly specify the authorizations, ratings, and/or limitations being approved. When filling out the Air Agency Certificate, there must not be any erasures, strikeovers, or typographical errors. The Air Agency Certificate must be signed by the office manager or a delegated manager.

C. Adding or Removing Articles from a Capability List (CL). A repair station with a limited rating may use a CL as authorized by § 145.215 to identify articles within the scope of ratings of the repair station's certificate with an established capability for maintenance,

UNCONTROLLED COPY WHEN DOWNLOADED
Check with FSIMS to verify current version before using

preventive maintenance, or alterations. An application (FAA Form 8310-3) is not required to make revisions to a CL. A CL should identify the level of capability of each article listed (e.g., overhaul, repair, inspect, test, etc.). Once the article or subassembly is identified on the CL, there is no need to list "individual series" contained under the make and model, provided the classification is defined.

1) The ASI will receive a copy of the CL, or any revisions to the list, and will verify the repair station met all applicable regulatory requirements for the self-evaluation. The OpSpecs will indicate the certificate holder is authorized and the articles are covered under the existing ratings and limitations.

2) If the repair station is not appropriately rated, or does not maintain or have the necessary tools, equipment, housing, facilities, and trained personnel to perform the required maintenance on the article(s) listed on the CL, reject the CL list.

a) Initiate a transmittal document indicating the date, document, and revision number of the rejected CL.

b) Return all copies to the applicant with an explanation of discrepancies requiring correction and instructions for resubmitting the documents.

D. Geographic Authorization. A repair station outside the United States may be issued geographic authorization to maintain U.S.-registered aircraft operated under 14 CFR part 121 or 135, where an appropriately rated repair station is not available in that country. Geographic authorization is not a rating; it is authorization in OpSpec B050 which allows line maintenance to be performed outside of the repair station's domiciled country. CHDO management must concur with the issuance of geographic authorization, and must consider the surveillance responsibilities and resource requirements. Coordination efforts with an International Field Office (IFO) and air carrier CMO with oversight responsibilities in that country should be considered to mitigate resources and travel expenses.

2-1260 CLASS RATINGS UNDER § 145.59. Class ratings are issued to repair stations that can demonstrate capability to maintain a representative number of makes and models of products under this rating. A class rating does not have restrictions for a specific product. If any restrictions or limitations apply, then a limited rating would be issued in lieu of the class rating. Normally, the FAA will not issue a class rating on an initial repair station certification. New applicants should be issued a limited rating until such time the repair station can demonstrate the capability to perform enough work to establish a representative number of makes and models for a class rating.

NOTE: The ASI should exercise discretion when using the term "representative number," as this will vary with the type of application and the depth and complexity of the work performed. For example, an airframe Class 4 rating would normally be issued when the applicant demonstrates the ability to maintain one of each make in that class (i.e., Boeing 747, Airbus A320, MD-11, and large all-metal construction helicopters).

UNCONTROLLED COPY WHEN DOWNLOADED
Check with FSIMS to verify current version before using

A. Airframe. Airframe is defined in 14 CFR part 1, § 1.1 as the fuselages, booms, nacelles, cowlings, fairings, airfoil surfaces (including rotors but excluding propellers and rotating airfoils of engines), and landing gear of an aircraft and their accessories and controls. The following class ratings are listed under "Airframe:"

1) Class 1. A composite construction of small aircraft. Gross takeoff weight (GTOW) is 12,500 lbs. or less, of which a major portion of the airframe structure is constructed of composite material, made of at least two types of substances, regardless of kind of covering utilized (e.g., Cirrus, HondaJet, Stemme Glider).

2) Class 2. A composite construction of large aircraft. GTOW is more than 12,500 lbs., of which a major portion of the airframe structure is constructed of composite material, made of at least two types of substances, regardless of kind of covering utilized (e.g., Boeing 787, Airbus A350, Airbus A380, Airbus Helicopters H160).

3) Class 3. An all-metal construction of small aircraft. GTOW is 12,500 lbs. or less, of which a major portion of the airframe structure, regardless of kind of covering utilized, is all-metal construction (e.g., Cessna 172, Piper PA-31, Pilatus PC-12, Cessna 425, Bell 206).

4) Class 4. An all-metal construction of large aircraft. GTOW is more than 12,500 lbs., of which a major portion of the airframe is all metal construction (e.g., Boeing 747, McDonnell Douglas MD-11, Airbus A320, Sikorsky S-70).

Table 2-10. Airframe Ratings and Classifications Under § 145.59

Rating	Class	Definitions and Notes
Airframe	Class 1: Composite construction of small aircraft Class 2: Composite construction of large aircraft Class 3: All-metal construction of small aircraft Class 4: All-metal construction of large aircraft	Airframe ratings are issued to repair stations for the performance of maintenance and alterations on airframes, airframe structure, landing gear, and aircraft systems for which it is rated. An airframe rating is necessary to perform aircraft line or hangar maintenance, and major repairs and alterations on the aircraft. However, it may not maintain or alter a type certificated engine or propeller, radios, or instruments without additional rating(s). Authorized maintenance under an airframe rating: 1. The removal, installation, and functional test on installed powerplants, propellers, accessories, radios, and instruments are authorized under an airframe rating. 2. Maintenance (excluding major repair and alterations) expressly permitted by the Aircraft Maintenance Manual (AMM) containing the technical instructions for conducting maintenance on installed powerplants, accessories, propellers, radios, and instruments. 3. Title 14 CFR part 91, § 91.409 inspections of installed engines and propellers expressly permitted by the AMM.

UNCONTROLLED COPY WHEN DOWNLOADED
Check with FSIMS to verify current version before using

		4. Airframe major repair or alteration in 14 CFR part 43 appendix A. 5. Structural repairs and alterations permitted by the AMM, Structural Repair Manual (SRM), or other FAA-approved data. 6. Maintenance of aircraft components, such as: seats, seatbelts, berths, galley and galley appliances (coffee pots, refrigerators, carts), lavatories, cabinetry, cabin/flight deck interior foam and fabric upholstered parts, passenger convenience equipment, inflight entertainment systems, dividers, bulkheads, curtains, windows, any other interior structure, aircraft composite components, aircraft painting, electrical wiring harnesses and distribution systems, cargo ball mats, cargo floor roller tracks and motorized rollers, floor or side locks and rails, and cargo unit load devices (ULD). NOTE: Additional ratings should be considered if the work performed under an airframe rating is questionable or is not clearly defined in the regulations. AMMs contain limited data for on-wing maintenance to powerplants, propellers, radios, instruments, and accessories, but may not have the required data for maintaining these articles. The Component Maintenance Manual (CMM) or Overhaul Manual may contain the repair data requiring special tooling or special skills normally not associated with an airframe rating. An airframe rating may not be appropriate for the following type of maintenance: 1. An accessory, appliance, or component part is removed from the aircraft for maintenance or alteration and internal sections are repaired or replaced using data not associated with the airframe rating. 2. Major repairs or alterations to a powerplant, propeller, appliance, radios, instruments, or accessories under part 43 appendix A require additional ratings. 3. Additional ratings are required for altimeter system and air traffic control (ATC) tests and inspections, as required in §§ 91.411 and 91.413. 4. The aircraft maintenance records are not receiving a maintenance release for that equipment, as required by § 43.9(a), due to the component was removed and was not reinstalled onto the aircraft. 5. Maintaining powerplants, propellers, radios, instruments, or accessories. Maintaining these articles involves data not associated with the AMMs.

UNCONTROLLED COPY WHEN DOWNLOADED
Check with FSIMS to verify current version before using

B. Powerplant. Aircraft engine is used or intended to be used for propelling aircraft. It includes turbo-superchargers, magnetos, carburetors, appurtenances, and other accessories necessary for proper operation of the powerplant, but does not include propellers. The following class ratings are listed under "Powerplant:"

1) Class 1. Reciprocating engines of 400 horsepower or less.

2) Class 2. Reciprocating engines of more than 400 horsepower.

3) Class 3. Turbine engines.

NOTE: Although the regulations do not define "powerplant," they do define "aircraft engine." The term powerplant and engine are synonymous for this guidance.

Table 2-11. Powerplant Rating and Classifications Under § 145.59

Rating	Class	Definitions and Notes
Powerplant	Class 1: Reciprocating engines of 400 horsepower or less Class 2: Reciprocating engines of more than 400 horsepower Class 3: Turbine engines	A powerplant rating provides the privilege of maintaining and performing maintenance and alterations on powerplants installed or removed from an aircraft, and components needed for its operation within the limitations in its OpSpecs, but not to adjoining airframe or propeller components. Authorized maintenance under a powerplant rating: 1. Removal and installation of propellers from an engine, and the removal and installation of accessories from an engine. 2. Opening and closing of access panels, doors, cowling, and nacelles, as needed, to gain access to the powerplant, controls, or accessories. 3. Powerplant major repair or alterations in 14 CFR part 43 appendix A. 4. Maintenance (excluding major repair and alterations) expressly permitted by the Engine Maintenance Manual (EMM) containing the technical instructions for conducting maintenance on accessories and components. 5. Maintenance on removed engine components or parts of an engine where a function or step of a process is performed (such as nondestructive inspection (NDI), plating, heat treatment, welding, plasma spraying, laser shot peening) using FAA-accepted or approved data.

UNCONTROLLED COPY WHEN DOWNLOADED
Check with FSIMS to verify current version before using

		NOTE: Additional ratings should be considered if the work performed under a powerplant rating is questionable or is not clearly defined in the regulations. A powerplant rating may not be appropriate for the following type of maintenance: 1. A repair station will need an airframe rating to remove or install powerplants from an aircraft. 2. An engine accessory or appliance is removed from the engine for maintenance or alteration and internal sections are repaired or replaced using data not associated with the engine rating. The EMM may not have the required data for such repairs. The Component Maintenance Manual (CMM) or Overhaul Manual may contain the repair data requiring special tooling or special skills normally not associated with a powerplant rating. 3. Major repairs and alterations performed on articles that do not fall under powerplant in part 43 appendix A. 4. The powerplant maintenance records are not receiving a maintenance entry for that equipment as required by § 43.9(a) due to the component was removed and was not reinstalled onto the engine. 5. Maintaining or altering airframes, propellers, radios, instruments, or accessories. Maintaining these articles involves data not associated with the EMMs.

NOTE: When determining the appropriate rating for auxiliary power units (APU), an APU is an accessory by virtue of its function of providing power to the aircraft when the aircraft is not in flight. However, some of the newer models of aircraft also use APUs as powerplants, which further blurs the lines between general aviation (GA) and corporate or commuter aircraft. ASIs should consider those articles used as the primary means of propulsion for these newer aircraft as powerplants, not APUs, and should rate repair stations appropriately. However, repair stations performing maintenance or alterations on APUs used strictly to produce auxiliary power for transport-category aircraft should obtain a limited accessory rating.

C. Propeller. A propeller is a device for propelling an aircraft that has blades on an engine-driven shaft and that, when rotated, produces by its action on the air a thrust approximately perpendicular to its plane of rotation. It includes control components normally supplied by its manufacturer, but does not include main and auxiliary rotors or rotating airfoils of engines. The following class ratings are listed under “Propeller:”

UNCONTROLLED COPY WHEN DOWNLOADED
Check with FSIMS to verify current version before using

1) Class 1. All fixed pitch and ground adjustable propellers of wood, metal, or composite construction.

2) Class 2. All other propellers, by make.

NOTE: For a Class 2 propeller rating, there must be a list of propellers by make contained in the OpSpecs.

Table 2-12. Propeller Ratings and Classifications Under § 145.59

Rating	Class	Definitions and Notes
Propeller	Class 1: All fixed pitch and ground adjustable propellers of wood, metal, or composite construction Class 2: All other propellers, by make	A propeller rating provides the privilege of maintaining and performing maintenance and alterations on propellers and propeller components installed or removed from the aircraft, for which it is rated and within the limitations in its OpSpecs, but not to adjoining airframe or powerplant components. A repair station certificated as a propeller, powerplant, or airframe-rated repair station may remove and install propellers and the attaching hardware on an aircraft. Authorized maintenance under a propeller rating: 1. Removal and installation of propellers, propeller accessories, and propeller spinner dome from an engine. 2. Opening and closing of access panels, doors, cowling, and nacelles, as needed, to gain access to the propeller controls, or accessories. 3. Propeller major repair or alterations in 14 CFR part 43 appendix A. 4. Balance and testing for proper tracking and pitch-changing mechanisms on aircraft. 5. Repair or replace components applicable for the propeller operation.

D. Radio.

1) Radio Ratings. Radio class ratings are categorized under communication, navigation, and radar classes. Modern avionics equipment typically integrates communications and navigation functions into a single appliance. Also, radar equipment or a radio that operates using pulse technology also serves communication and/or navigation functions. The combination of functionality and operations of these articles may require the repair station to attain a rating for all three classes, depending on the complexity of the articles being maintained, and upon determining the repair station can maintain a representative amount of articles within each class.

UNCONTROLLED COPY WHEN DOWNLOADED
Check with FSIMS to verify current version before using

2) Radio Class Ratings. The following class ratings are listed under "Radio:"

a) Class 1: Communication equipment.

b) Class 2: Navigational equipment.

c) Class 3: Radar equipment.

Table 2-13. Radio Ratings and Classifications Under § 145.59

Rating	Class	Definitions and Notes
Radio	Class 1: Communication equipment	Radio transmitting and/or receiving equipment used in an aircraft to send or receive communications in flight, regardless of carrier frequency or type modulation used. This equipment includes auxiliary and related aircraft inter-phone systems, amplifier systems, electrical or electronic inter-crew signaling devices, and similar equipment. Does not include equipment for navigating or aiding navigation of aircraft, equipment used for measuring or terrain clearance, other measuring equipment operated on radio or radar principles, or mechanical, electrical, gyroscopic, or electronic instruments that are a part of communications radio equipment.
	Class 2: Navigational equipment	A radio system used in an aircraft for en route or approach navigation. This does not include equipment operated on pulsed radio frequency principals, or equipment used for measuring altitude or terrain clearance.
	Class 3: Radar equipment	An aircraft electronic system operated on radar or pulsed radio frequency principles.
NOTE: A radio-rated repair station may remove or install complete communication and navigation systems and equipment onto an airframe. This includes tests, inspections, repairs, and alterations associated with aircraft wiring, antennas, connectors, relays, radio instruments, painting and refinishing equipment, and marking calibration or other information on panels and components. Major alteration and repairs of radios are authorized. Installation requiring alterations to the aircraft structure must be performed, supervised, and inspected by qualified personnel with airframe structure experience that can provide approval for return to service of the aircraft after the repairs or alterations. The fabrication of tuning shafts, brackets, cable assemblies, and other similar components used in radios or aircraft radio installations and prepare Weight and Balance (W&B) reports may also be authorized under the radio rating.		

E. Instrument.

1) Instrument Ratings. The instrument rating is divided into four classes (mechanical, electrical, gyroscopic, and electronic) based on the article's general principles of operation. Multiple class ratings may be necessary to perform repairs on these articles.

UNCONTROLLED COPY WHEN DOWNLOADED
Check with FSIMS to verify current version before using

NOTE: ASIs must verify that a repair station obtains the appropriate supporting requirements for the capabilities it is requesting.

2) Instrument Class Ratings. The following class ratings are listed under "Instrument:"

a) Class 1: Mechanical.

b) Class 2: Electrical.

c) Class 3: Gyroscopic.

d) Class 4: Electronic.

Table 2-14. Instrument Ratings and Classifications Under § 145.59

Rating	Class	Definitions and Notes
Instrument	Class 1: Mechanical	A diaphragm, bourdon tube, aneroid, optical, or mechanically-driven centrifugal instrument used on aircraft to operate aircraft, including tachometers, airspeed indicators, pressure gauges' drift sights, magnetic compasses, altimeters, or similar mechanical instruments.
	Class 2: Electrical	Self-synchronous and electrical indicating instruments and systems, including remote indicating instruments, cylinder head temperature gauges, or similar electrical instruments.
	Class 3: Gyroscopic	An instrument or system using gyroscopic principles and motivated by air pressure or electrical energy, including automatic pilot control units, turn and bank indicators, directional gyros, and their parts and flux gate and gyrosyn compasses.
	Class 4: Electronic	An instrument whose operation depends on electron tubes, transistors, or similar devices, including capacitance type quantity gauges, system amplifiers, and engine analyzers.
NOTE: An instrument-rated repair station may maintain, inspect, test, calibrate, and alter instruments, including removal and installation of instruments onto an airframe. Major alteration and repairs of instruments are authorized. The function of installation may include fabrication of instrument panels and other installation structural components. Installation requiring alterations to the aircraft structure must be performed, supervised, and inspected by qualified personnel with airframe structural experience that can provide approval for return to service of the aircraft after the structural repairs or alterations.		

UNCONTROLLED COPY WHEN DOWNLOADED
Check with FSIMS to verify current version before using

Table 2-15. Authorized Repair Station Ratings for §§ 91.411 and 91.413 Testing

To perform air traffic control (ATC) transponder testing and inspections as described in 14 CFR part 43 appendix F or altimeter system tests and inspections as described in part 43 appendix E, authorized repair station ratings for 14 CFR part 91, §§ 91.411 and 91.413 testing would require different ratings for the following conditions:	
Condition	**Rating**
Part 91, § 91.411	
Component removal or installation.	Instrument rating Class 1, or Limited instrument rating of a particular make and model (unless limited from this function), or Airframe rating appropriate to airplane or helicopter.
Integrated system tested on aircraft without removal or installation, normal operation of system without disassembly of aircraft.	Instrument rating Class 1, or Limited instrument rating appropriate to the make and model of appliance to be tested, or Limited rating appropriate to the test to be performed, or Airframe rating appropriate to airplane or helicopter to be tested.
Specific components tested on the bench (may not satisfy all requirements).	Instrument rating Class 1, or Limited instrument rating appropriate to the make and model of appliance to be tested, or Airframe rating appropriate to airplane or helicopter tested.
Part 91, § 91.413	
Component removal or installation.	Radio rating Class 3, or Limited Radio rating appropriate to the appliance (unless limited from this function), or Airframe rating appropriate to airplane or helicopter tested.
Integrated system tested on aircraft without removal or installation, normal operation of system without disassembly of aircraft.	Radio rating Class 3, or Limited radio rating appropriate to the make and model of transponder to be tested, or Limited rating appropriate to the test to be performed.
Specific components tested on the bench (may not satisfy all requirements).	Radio rating Class 3, or Limited radio rating of a particular make and model.

UNCONTROLLED COPY WHEN DOWNLOADED
Check with FSIMS to verify current version before using

F. Accessories.

1) Accessory Ratings. An accessory is an appliance, part, mechanism, equipment, or apparatus that is used or intended to be used in operating or controlling an aircraft in flight, is installed in or attached to the aircraft, and is not part of an airframe, aircraft engine, or propeller. The accessory rating is divided into mechanical, electrical, and electronic classes, based on an article's principle of operation. The combination of functionality and operations of these articles may require the repair station to attain a rating for all three classes, depending on the complexity of the article.

NOTE: Because night vision goggles (NVG) are no longer novel, unique, or unusual in application, and more repair stations perform and seek to perform this type of maintenance, it is no longer appropriate to issue a limited rating for specialized services for future NVG ratings. Since NVGs are certificated as appliances (and they meet the requirement of a Class 3 accessory), the FAA should issue a Class 3 accessory or limited accessory rating, as appropriate, to repair stations that apply for a rating and that meet the requirements of part 145.

2) Accessory Class Ratings. The following class ratings are listed under "Accessory:"

a) Class 1: Mechanical.

b) Class 2: Electrical.

c) Class 3: Electronic.

Table 2-16. Accessory Ratings and Classifications Under § 145.59

Rating	Class	Definitions and Notes
Accessory	Class 1: Mechanical	A mechanical accessory that depends on friction, hydraulics, mechanical linkage, or pneumatic pressure for operation, including aircraft wheel brakes, mechanically-driven pumps, carburetors, aircraft wheel assemblies, shock absorber struts, and hydraulic servo units.
	Class 2: Electrical	An electrical accessory that depends on electrical energy for its operation, and a generator, including starters, voltage regulators, electric motors, electrically-driven fuel pumps, magnetos, or similar electrical accessories.
	Class 3: Electronic	An electronic accessory that depends on the use of an electron tube transistor, or similar device, including supercharger, temperature, air conditioning controls, or similar electronic controls.
NOTE: An accessory rated repair station may perform maintenance on accessories removed from an aircraft, engine, or propeller for which it is rated and within the limitations in its OpSpecs.		

UNCONTROLLED COPY WHEN DOWNLOADED
Check with FSIMS to verify current version before using

2-1261 LIMITED RATINGS UNDER § 145.61.

A. Limited Rating Issuance. Repair stations are issued limited ratings for the performance of maintenance and alterations on particular makes and models of airframes, powerplants, propellers, radios, instruments, accessories, and/or parts thereof; or if it performs only specific maintenance requiring equipment and skills not ordinarily performed under other repair station ratings. Such a rating may be limited to a specific model aircraft, engine, constituent part, or to any number of parts made by a particular manufacturer.

NOTE: Review the notes and authorized maintenance in paragraph 2-1260 for the general application of a rating and type of work authorized.

B. Limited Rating Applicability. Limited ratings listed in § 145.61 are limited to not only a particular article's make or model, but may also be limited to certain maintenance functions. In this case, the OpSpecs would identify the process or specification and any additional limitations, but the make/model column could contain "all models." The limitations column would identify any limitations to its maintenance capabilities, such as, "Limited to plasma spray operations on Pratt and Whitney series turbine blades." This rating allows the repair station to plasma spray all Pratt and Whitney turbine blades, regardless of the Pratt and Whitney model.

C. Limited Rating Types. The FAA may only issue the following limited ratings:

- Airframes of a particular make and model;
- Engines of a particular make and model;
- Propellers of a particular make and model;
- Instruments of a particular make and model;
- Radio equipment of a particular make and model;
- Accessories of a particular make and model;
- Landing gear components;
- Floats, by make;
- Nondestructive inspection (NDI), testing, and processing;
- Emergency equipment;
- Rotor blades, by make and model;
- Aircraft fabric work; and
- Any other purpose for which the FAA finds the applicant's request is appropriate.

NOTE: The limited rating, "any other purpose for which the FAA finds the applicant's request is appropriate," is intended to be issued for repair stations that wish to perform maintenance on items and other component parts that do not necessarily fit into one of the other 12 limited ratings. This action provides future and current certificate holders another option for ratings that will better define the types of articles the repair station may perform maintenance on. It will reduce the number of limited airframe ratings issued for component part work for which an airframe rating is not needed. Similarly, articles could be provided for by the limited "other" category. These could include items such as: aircraft interiors,

UNCONTROLLED COPY WHEN DOWNLOADED
Check with FSIMS to verify current version before using

upholstering, serving carts, cabinets, unit load devices (ULD), cargo pallets or containers, coffee makers, and litters; and specifications such as testing in accordance with part 43 appendix F.

1) Limited Specialized Service. Limited specialized service ratings are issued for a special maintenance function when the function is performed in accordance with a specification approved by the FAA. A specialized service rating is not appropriate if the technical data is explicitly listed in the article's manufacturer's maintenance manuals, instructions for continued airworthiness (ICA), or air carrier's Continuous Airworthiness Maintenance Program (CAMP). The approval for return to service can be accomplished under the article's overall rating (e.g., airframe, powerplant, accessory, etc.). The specialized service rating is required when the technical data needs to be FAA approved, instructions don't exist, or the rating is not appropriate for the maintenance performed on the article. The OpSpecs must include the specifications used by the repair station to perform that service in accordance with § 145.61(c). No function of a limited rating for specialized service may be contracted out. Per § 145.61(c), "The specification may be—

- A civil or military specification currently used by industry and approved by the FAA, or
- A specification developed by the applicant and approved by the FAA."

NOTE: The repair station may seek a limited specialized service rating using technical data such as civil or Military Specifications (MIL-SPEC) currently used by industry. Many civil and MIL-SPECs are generic and may not be sufficient to repair complex articles used in the aviation industry today. For example, they may lack critical min/max dimensional serviceable limitations to ensure airworthiness of the product being inspected or repaired. The specification used for a repair must be sufficient to return an article to its original or properly altered condition. To ensure the data is adequate for the rating sought, the ASI should seek concurrence from the Aircraft or Engine Certification Office (ACO/ECO) before authorizing the rating in OpSpecs. The ASI may contact the Aircraft Evaluation Group (AEG) who will coordinate assistance with the correct ACO/ECO branch.

2) Limited Specialized Service Requirements. The limited specialized service rating would require a repair station to have the housing, facilities, equipment, tools, trained personnel, and data to perform the process on an article. The specification on the OpSpecs would set forth the minimum standards for performing the generic process (specialized service). For example, the specification would include an explanation of the housing, facilities, equipment, tools, trained personnel, and data necessary for the overall process. The applicable manufacturer's maintenance manual, air carrier manual, or other FAA-accepted or FAA-approved data would define the specific parameters associated with performing the process on the particular aviation article.

3) Unusual and Unique Processes. At the onset of the performance of a new, unusual, and/or unique process, a limited specialized service rating may be appropriate if the repair station performs the process as described in subparagraph 2-1261C1). The process may eventually become common and more appropriately identified by a rating other than a limited

UNCONTROLLED COPY WHEN DOWNLOADED
Check with FSIMS to verify current version before using

rating for specialized services. In these cases, future repair station ratings will be issued in the more appropriate class. Ratings for currently rated repair stations can only be changed by application from the repair station or as a result of enforcement action. A repair station with a limited rating for specialized services in this circumstance should be advised of the change in classification. The FAA may recommend to the repair station that they apply for a change of rating.

D. Limited Rating Identification. OpSpecs should identify the manufacturer and the make/model. In certain rare occasions, the term "all" may be appropriate when identifying the make/model. When using "all" to denote the make/model, the principal inspector (PI) must use good judgment and carefully consider potential unintended consequences. If the inspector is not careful, use of the word "all" could inadvertently authorize work beyond the desired intent. For example, use of the word "all" may seem appropriate to authorize structural repairs on all models of aircraft manufactured by Mooney International Corporation. However, unless the PI excludes several early production models, this authorization may inadvertently allow structural repairs on both wood and metal primary structures. The use of "all" provides that the rating will include any future products that may be developed that fall within the listed limitation as well as all past products.

NOTE: Limited ratings may incorporate a CL if the repair station has elected to employ one. For example, a repair station without a CL might receive a limited airframe rating for the performance of transponder testing on a specific make/model aircraft, in accordance with part 43 appendix F. A repair station that employs a CL may list the transponder make/model on the CL. For the performance of transponder testing on a specific make/model aircraft, the aircraft must be listed on OpSpecs.

E. Limited Engine Rating. Repair stations require an appropriate limited engine rating when performing maintenance or alterations on engines. Inspections of engines performed under 14 CFR part 91, § 91.409 and removal and replacement of engines and components installed on an aircraft may be performed under an appropriate airframe rating as described in the airframe maintenance manuals. An engine requiring repair or alteration as a result of the aircraft inspection would require a limited engine rating.

NOTE: Because maintenance procedures, tools, equipment, and technical data may differ between manufacturers, ASIs must verify a repair station obtains the appropriate supporting requirements for the capabilities it is requesting.

F. Limited Rating Limitations. The current OpSpecs allow the proper identification of the limitation of makes and models, as well as maintenance functions in the "Limitations" section. Limitations must not be vague and undefined. It is important that the repair station clearly understand its privileges and any associated limitations. When issuing a limited rating, the PI must adequately describe the scope of the rating and any associated limitations in a clearly understood manner. Vague or misunderstood OpSpecs could lead to operations outside the intended scope of the certificate.

UNCONTROLLED COPY WHEN DOWNLOADED
Check with FSIMS to verify current version before using

1) When necessary, use of the limitations column may further limit the intended scope of the rating. The PI should use good judgment and carefully consider possible unintended consequences of not specifying limitations. If painting, for instance, is the only maintenance function a repair station intends to perform, the limitation should read, "Limited to painting airframe structure and components on Boeing 737 series aircraft," or similar language. If the repair station's limitation is performing maintenance on only a certain part of the airframe, that language should specify the manufacturer, make, and model of the component, and describe exactly what the repair station is limited to do.

NOTE: Painting of aircraft may also involve other maintenance functions such as balancing of flight controls. The repair station should have the ability or be authorized to contract out those functions.

2) Powerplant maintenance has also found numerous "niche" businesses that may include the performance of a specific maintenance function on a wide variety of powerplants. In this case, the OpSpecs would identify the manufacturer, but the make/model column could contain "all models" instead of identifying each model. The limitations column would identify any limitations to its maintenance capabilities, such as, "Limited to plasma spray operations on Pratt and Whitney series turbine blades." This rating allows the repair station to plasma spray all Pratt and Whitney turbine blades, regardless of the powerplant model the blades were from. The OpSpecs would also need to list additional manufacturers if the repair station has the technical data, tools, and equipment to perform this maintenance function on those additional powerplants.

2-1262 EXPERIMENTAL AIRCRAFT. Occasionally repair stations request ratings or additions to their OpSpecs to perform work on certain experimental aircraft (e.g., amateur built, Unmanned Aircraft Systems (UAS), Optionally Piloted Aircraft (OPA), or experimental light-sport) or other products to which part 43 does not apply.

A. Part 43 Applicable Aircraft. Part 43 provides that it applies only to certain products. Those products are:

- Aircraft having a U.S. airworthiness certificate (with certain exceptions);
- Foreign-registered civil aircraft used in common carriage or carriage of mail under part 121 or 135; and
- Airframes, aircraft engines, propellers, appliances, and component parts of the above aircraft.

B. Part 43 Non-Applicable Aircraft. Part 43 does not apply to any aircraft for which the FAA has issued an experimental certificate:

- Unless a different kind of certificate was previously issued to that aircraft; or
- Under the provisions of part 21, § 21.191(i)(3) and the aircraft was previously issued a special light-sport certificate under § 21.190.

C. Part 145 Repair Station Rules. The applicability of the repair station rule (refer to § 145.1) is clear that part 145 contains the rules a repair station must follow related to its

UNCONTROLLED COPY WHEN DOWNLOADED
Check with FSIMS to verify current version before using

performance of maintenance, preventive maintenance, or alterations of an aircraft, airframe, aircraft engine, propeller, appliance, or component part to which part 43 applies.

D. Part 43 Non-Applicable Product Requests. The FAA office receiving a request to add a product to which part 43 does not apply, to a certificate (rating, OpSpecs, CL, or FAA-approved maintenance function) will advise the repair station making this request that repair station ratings are not issued for products to which part 43 does not apply and those products will not be added. This includes any aircraft identified under § 43.1(b) as having been issued an experimental airworthiness certificate unless that aircraft was previously issued a different kind of airworthiness certificate. It would be inappropriate to issue ratings to a repair station for the performance of maintenance on a product to which part 43 (and therefore part 145) does not apply.

1) When a part 145 repair station performs maintenance on a component part (article) or aircraft that is not FAA type certificated, or does not have a U.S. airworthiness certificate (articles not under the FAA's jurisdiction), the repair station is not exercising the privileges of its FAA-issued repair station certificate. Those activities are not governed by maintenance or repair station regulations.

2) No current regulation in part 145 prohibits a repair station from completing maintenance on articles not under the FAA's jurisdiction and providing approval for return to service by issuing an FAA Form 8130-3, or any other document, to record activities that are not regulated by the FAA.

E. Experimental Aircraft Operating Limitation Provisions. Experimental aircraft operating limitations may contain a provision that certain maintenance or inspections may be performed by a certificated repair station. A repair station may perform such work in accordance with the provisions of the limitations issued for the aircraft. Any work performed by a repair station in accordance with the limitation issued to the aircraft may satisfy the requirements of the limitations, but the repair station is not exercising certificate privilege when it applies its certificate number to any work for which part 43 does not apply.

NOTE: The maintenance provider may release an aircraft that holds an experimental certificate for aircraft and/or a UAS, upon completion of maintenance based on the owner's written request and limitations specification provided, but are not exercising the privileges of their certificate when they return to service the experimental aircraft. Additionally, the holder of the mechanic certificate may perform maintenance per owner request and in accordance with the limitations issued for the aircraft.

2-1263 COORDINATION REQUIREMENTS. This task requires coordination among the ASIs (Airworthiness) and may require coordination with multiple offices.

RESERVED. Paragraphs 2-1264 through 2-1269.

UNCONTROLLED COPY WHEN DOWNLOADED
Check with FSIMS to verify current version before using

VOLUME 3 GENERAL TECHNICAL ADMINISTRATION

CHAPTER 19 TRAINING PROGRAMS AND AIRMAN QUALIFICATIONS

Section 1 Scope, Concepts, and Definitions

Source Basis:

- **Section 61.31, Type Rating Requirements, Additional Training, and Authorization Requirements.**
- **Section 121.400, Applicability and Terms Used.**
- **Section 121.401, Training Program: General.**
- **Section 121.402, Training Program: Special Rules.**
- **Section 121.403, Training Program: Curriculum.**
- **Section 121.405, Training Program and Revision: Initial and Final Approval.**
- **Section 121.407, Training Program: Approval of Airplane Simulators and Other Training Devices.**
- **Section 121.409, Training Courses Using Airplane Simulators and Other Training Devices.**
- **Section 121.415, Crewmember and Dispatcher Training Program Requirements.**
- **Section 121.417, Crewmember Emergency Training.**
- **Section 121.418, Differences Training and Related Aircraft Differences Training.**
- **Section 121.419, Pilots and Flight Engineers: Initial, Transition, and Upgrade Ground Training.**
- **Section 121.424, Pilots: Initial, Transition, and Upgrade Flight Training.**
- **Section 121.425, Flight Engineers: Initial and Transition Flight Training.**
- **Section 121.427, Recurrent Training.**
- **Section 121.431, Applicability.**
- **Section 121.433, Training Required.**
- **Section 121.434, Operating Experience, Operating Cycles, and Consolidation of Knowledge and Skills.**
- **Section 121.438, Pilot Operating Limitations and Pairing Requirements.**
- **Section 121.439, Pilot Qualification: Recent Experience.**
- **Section 121.440, Line Checks.**
- **Section 121.441, Proficiency Checks.**
- **Section 121.453, Flight Engineer Qualifications.**
- **Section 121.652, Landing Weather Minimums: IFR: All Certificate Holders.**
- **Section 121.805, Crewmember Training for In-Flight Medical Events.**
- **Section 121.1001, Applicability and Definitions.**
- **Section 121.1003, Hazardous Materials Training: General.**
- **Section 121.1005, Hazardous Materials Training Required.**
- **Section 121.1007, Hazardous Materials Training Records.**
- **Appendix E to Part 121, Flight Training Requirements.**
- **Appendix H to Part 121, Advanced Simulation.**
- **Appendix O to Part 121, Hazardous Materials Training Requirements for Certificate Holders.**

UNCONTROLLED COPY WHEN DOWNLOADED
Check with FSIMS to verify current version before using

- **Section 135.244, Operating Experience.**
- **Section 135.247, Pilot Qualifications: Recent Experience.**
- **Section 135.291, Applicability.**
- **Section 135.293, Initial and Recurrent Pilot Testing Requirements.**
- **Section 135.297, Pilot in Command: Instrument Proficiency Check Requirements.**
- **Section 135.299, Pilot in Command: Line Checks: Routes and Airports.**
- **Section 135.301, Crewmember: Tests and Checks, Grace Provisions, Training to Accepted Standards.**
- **Section 135.321, Applicability and Terms Used.**
- **Section 135.323, Training Program: General.**
- **Section 135.324, Training Program: Special Rules.**
- **Section 135.325, Training Program and Revision: Initial and Final Approval.**
- **Section 135.327, Training Program: Curriculum.**
- **Section 135.329, Crewmember Training Requirements.**
- **Section 135.330, Crew Resource Management Training.**
- **Section 135.331, Crewmember Emergency Training.**
- **Section 135.335, Approval of Aircraft Simulators and Other Training Devices.**
- **Section 135.341, Pilot and Flight Attendant Crewmember Training Programs.**
- **Section 135.343, Crewmember Initial and Recurrent Training Requirements.**
- **Section 135.345, Pilots: Initial, Transition, and Upgrade Ground Training.**
- **Section 135.347, Pilots: Initial, Transition, Upgrade, and Differences Flight Training.**
- **Section 135.351, Recurrent Training.**
- **Section 135.501, Applicability and Definitions.**
- **Section 135.503, Hazardous Materials Training: General.**
- **Section 135.505, Hazardous Materials Training Required.**
- **Section 135.507, Hazardous Materials Training Records.**

3-1071 TRAINING PROGRAM OVERVIEW.

F. Flightcrew Member Training Programs. This chapter contains directions and guidance to be used by Federal Aviation Administration (FAA) personnel responsible for the evaluation, approval, and surveillance of Title 14 of the Code of Federal Regulations (14 CFR) parts 121 and 135 flightcrew member training programs. This section contains concepts and definitions that are used throughout the chapter:

- Section 2 addresses the training program approval process.
- Section 3 addresses basic indoctrination curriculum segments.
- Section 4 addresses emergency training curriculum segments.
- Section 5 addresses ground training curriculum segments.
- Section 6 addresses flight training curriculum segments.
- Section 7 addresses qualification curriculum segments.
- Section 8 addresses special curriculum segments.
- Section 9 addresses differences training.
- Section 10 addresses recurrent training.

UNCONTROLLED COPY WHEN DOWNLOADED
Check with FSIMS to verify current version before using

- Section 11 addresses requalification training.
- Section 12 addresses related aircraft designations, training, and deviations for part 121.
- Section 13 addresses pilot-in-command (PIC) line checks.
- Section 14 addresses remedial training and tracking for part 121.
- Section 15 addresses air ambulance training programs.

NOTE: Unless otherwise specified in this chapter, the term "operator" applies equally to an applicant for a certificate and an existing certificate holder.

G. Operator Training Program Development. An applicant for an air carrier certificate or operating certificate is required to develop a training program. An existing operator may need to revise its training program when purchasing new equipment, operating in a new environment, obtaining new authorizations, or when new FAA requirements are specified. These new or revised training requirements must be incorporated into the operator's training program. Each part 121 and part 135 operator (with the exception of a part 135 operator limited to a single pilot or a single PIC) must obtain FAA approval of the curricula used for training flightcrew members, instructors, check pilots, and check Flight Engineers (FE). The operator is responsible for ensuring that its training program is complete, current, and in compliance with the regulations.

H. Operator Contracting with Training Providers.

1) Entities other than the certificate holder (i.e., other certificate holders operating under the same part or 14 CFR part 142 training centers) may train, test, or check that certificate holder's flightcrew members, instructors, check pilots, and check FEs, provided that:

a) There is a preexisting contractual or other arrangement;

b) That arrangement is in the primary certificate holder's FAA-approved training program; and

c) The training, testing, and checking are conducted in accordance with the primary certificate holder's approved training program.

2) Guidance for outsourced training can be found in Volume 3, Chapter 54, Section 5. Guidance for the issuance of operations specification (OpSpec) A031 authorizing such arrangements can be found in Volume 3, Chapter 18, Section 3.

I. Operator Training Program Approval. It is the policy of the Flight Standards Service to encourage operators to be innovative and creative when developing training methods and techniques. Principal operations inspectors (POI) are responsible for ensuring that regulatory requirements are met and that the operator's flightcrew members can competently perform their assigned duties before they are authorized to enter revenue service. Meeting regulatory requirements is paramount, but POIs should also embrace innovation in training delivery techniques. POIs should work collaboratively with their assigned carrier to explore new training techniques while also ensuring the carrier validates the results of any alternative techniques.

UNCONTROLLED COPY WHEN DOWNLOADED
Check with FSIMS to verify current version before using

3-1072 DEFINITIONS. The following terms are used throughout this chapter and are defined as follows:

A. Additional Checking Module. A check conducted to qualify a flightcrew member for an additional level of responsibility or skill beyond that of the basic flightcrew member duty position.

B. Aircraft Evaluation Division (AFS-100). The FAA organization that evaluates training, checking, currency, type rating, Master Minimum Equipment List (MMEL), and maintenance standards for assigned certificated aircraft types. AFS-100 also addresses operational aspects of aircraft type certification and resolution of service difficulties.

C. Basic Checking Module. The proficiency, competency, flight, or line check listed in a qualification segment of a curriculum outline required for qualification in the basic duties of a flightcrew member duty position.

D. Base Aircraft. An aircraft identified by a certificate holder for use as a reference to compare differences with another aircraft.

E. Categories of Training. A classification of training based on the previous qualifications of the flightcrew member. Categories of training consist of one or more curricula. The categories of training are initial new-hire, initial equipment, transition, upgrade, recurrent, and requalification.

F. Checking and Qualification Modules. An integral part of a qualification curriculum segment, which contains checking and qualification requirements specified under part 121 or part 135. For example, a qualification curriculum segment may contain a proficiency check module, a Line-Oriented Flight Training (LOFT) module, an Operating Experience (OE) module, and a consolidation of knowledge and skills module.

G. Common Type Rating. Common type rating is a term used in Flight Standardization Board (FSB) reports to describe a relationship between type ratings for aircraft with different type certificates (TC) that have no greater than level D training differences. See subparagraph NN for type rating.

H. Consolidation of Knowledge and Skills. A process by which a pilot, through practice and practical experience, increases proficiency in newly acquired knowledge and skills.

I. Courseware. Instructional material developed for each curriculum. This is information in lesson plans, instructor guides, computer software programs, audiovisual programs, workbooks, aircraft operating manuals, and handouts. Courseware must accurately reflect curriculum requirements, be effectively organized, and properly integrate with instructional delivery methods.

J. Currency. The experience necessary, within a specified period of time, for the safe operation of aircraft, equipment, and systems. Currency may include, but is not limited to, recent experience.

UNCONTROLLED COPY WHEN DOWNLOADED
Check with FSIMS to verify current version before using

K. Curriculum. A complete training agenda specific to an aircraft type, a flightcrew member duty position, and a category of training. An example is an "initial new-hire, Boeing 727 Flight Engineer (FE) curriculum." Each curriculum may consist of several curriculum segments.

L. Curriculum Segment. The largest subdivision of a curriculum, containing broadly related training subjects and activities based on regulatory requirements. Curriculum segments are logical subdivisions of a curriculum, which can be separately evaluated. Examples are a ground training segment and a flight training segment. Each curriculum segment consists of one or more training modules.

M. Designated Related Aircraft. Any two or more aircraft of the same make with different TCs that have been designated as related by the Air Transportation Division (AFS-200) based upon a request from the part 121 operator. This designation may allow credit between those aircraft to be applied for training, checking, recent experience, OE, operating cycles, or line operating flight time for consolidation of knowledge and skills. See subparagraph FF for related aircraft. See Volume 3, Chapter 19, Section 12 for additional information regarding related aircraft designation.

N. Difference Levels. Formally determined levels of training methods and checking methods that satisfy difference requirements between related aircraft. A range of five difference levels, in order of increasing requirements, identified as A through E, are specified for training and checking purposes.

O. Differences Tables. Tables that describe the differences between a pair of related aircraft and the minimum difference levels operators must use to conduct differences training and checking of crewmembers. These tables have been validated by the FSB and are published in the FSB report for the base aircraft type.

P. Duty Position. The functional or operating position of a crewmember or aircraft dispatcher. For parts 121 and 135 operations, duty positions are PIC, second in command (SIC), FE, flight attendant (F/A), aircraft dispatcher, flight instructor, check pilot, and check FE.

Q. Element. An integral, subject-oriented (not task-oriented) part of a training, checking, or qualification module. For example, an electrical power ground training module may include such elements as a direct current (DC) power system, an alternating current (AC) power system, and circuit protection.

R. Eligibility Period. Three calendar-months (i.e., the calendar-month before the training/checking month, the training/checking month, and the calendar-month after the training/checking month). During this period, a flightcrew member must satisfactorily complete the required recurrent ground or flight training, flight check, proficiency check, competency check, or line check to remain in a qualified status. Training or checking completed during the eligibility period is considered to be completed during the training/checking month.

S. Event. An integral, task-oriented part of a training, checking, or qualification module that requires the use of a specific procedure or procedures. A training event provides a student an opportunity for instruction, demonstration, and/or practice using specific procedures.

UNCONTROLLED COPY WHEN DOWNLOADED
Check with FSIMS to verify current version before using

A checking or qualification module provides a check pilot/check FE the opportunity to evaluate a student's ability to correctly accomplish a specific task without instruction or supervision.

T. Experience Module. An operation conducted in revenue service that is either under supervision or under restriction, and is measured in flight hours or in the number of repetitions of an event.

U. Final Approval. An FAA approval without an expiration date that authorizes an operator to continue training in accordance with a specific curriculum or curriculum segment. Final approval involving arrangements with other certificate holders or part 142 training centers must include the issuance of OpSpec A031.

V. Flight Standardization Board (FSB). A designated group of operations inspectors who evaluate type rating, certification, and training and qualification requirements for new or related aircraft. An FSB is usually established for large turbojet and turbopropeller aircraft, Special Federal Aviation Regulation (SFAR) 41 airplanes, and 14 CFR part 23 commuter category airplanes. An FSB is not usually established for 14 CFR parts 23 and 27 aircraft, unless the aircraft have unique design, flight, or handling characteristics.

W. FSB Report. The FSB issues a report after evaluating any new or related aircraft. The FSB report contains minimum training and qualification requirements for the aircraft and any related aircraft. The FSB report also contains any special training requirements for that aircraft type.

X. Initial Approval. An FAA approval that conditionally authorizes an operator to begin training under a specific curriculum or curriculum segment pending an evaluation of training effectiveness. An initial approval must specify an expiration date for the conditional authorization. Initial approval involving arrangements with other certificate holders or part 142 training centers must include the issuance of OpSpec A031.

Y. Instructional Delivery Methods. Methodology for conveying information to a student. This may include lectures, demonstrations, audiovisual presentations, programmed and directed self-study workshops, and drills. Ground training devices (GTD), flight simulation training devices (FSTD), aircraft, and computer workstations are also considered instructional delivery methods.

Z. Line-Oriented Flight Training (LOFT). LOFT is a module of training conducted in a full flight simulator (FFS). Qualification LOFT is conducted after completion of a basic checking module to satisfy the requirements of part 121 appendix H. Recurrent LOFT is conducted in accordance with part 121, § 121.409(b) to meet recurrent training requirements.

AA. Modular Training. The concept of program development in which logical subdivisions of training programs are developed, reviewed, approved, and modified as individual units. Curriculum segments and modules may be used in multiple curricula. The modular approach allows great flexibility in program development and reduces the administrative workload on both operators and instructors in the development and approval of these programs.

UNCONTROLLED COPY WHEN DOWNLOADED
Check with FSIMS to verify current version before using

BB. Planned Hours—Part 135. Part 135 does not require programmed hours to be defined within training programs. The hours associated with these programs are typically referred to as planned hours to avoid confusion with the requirements of part 121. Part 135 does, however, require each instructor, supervisor, or check pilot to certify the proficiency and knowledge of each flightcrew member upon completion of required training or evaluation. This certification may occur at any time when the instructor believes that the individual has reached the required level of proficiency during his or her scheduled training, provided that all elements and events of the approved training program have been successfully completed.

CC. Programmed Hours—Part 121. In accordance with part 121, § 121.403, each curriculum must include the programmed hours that the certificate holder will apply to the training. For initial new-hire, initial equipment, and recurrent categories, part 121 subpart N specifies the minimum programmed hours that each curriculum must include, unless reduced in accordance with § 121.405. Although part 121 subpart N does not specify minimum programmed hours for the other categories of training, the certificate holder must still include programmed hours in each curriculum.

DD. Qualification Curriculum Segment. The segment of a specified curriculum that begins when formal training has been completed and ends when the flightcrew member is fully qualified to perform unsupervised and without restriction in revenue service.

EE. Recent Experience. With respect to pilot flightcrew members, the flight experience required by § 121.439 or part 135, § 135.247. With respect to FEs, the flight experience required by § 121.453.

FF. Related Aircraft. Any two or more aircraft of the same make with either the same or different TCs that have been demonstrated and determined by the Administrator to have commonality.

GG. Related Aircraft Differences Training. The flightcrew member training for aircraft with different TCs that have been designated as related by AFS-200. (See Volume 3, Chapter 19, Section 12 for additional information regarding related aircraft differences training.)

HH. Testing and Checking. Methods for evaluating students as they demonstrate a required level of knowledge in a subject and, when appropriate, apply the knowledge and skills learned in instructional situations to practical situations.

II. Training Hours. The total amount of time necessary to complete the training required by a curriculum segment. This must provide an opportunity for instruction, demonstration, practice, and testing (as appropriate). This time must be specified in hours on the curriculum segment outline. For part 121, these are the programmed hours. For part 135, these hours are typically referred to as planned hours. A training hour includes time for normal breaks, usually 10 minutes each hour. Lunch breaks are not included.

JJ. Training Module. A subpart of a curriculum segment that constitutes a logical, self-contained unit. A module contains elements or events that relate to a specific subject. For example, a ground training curriculum segment could logically be divided into modules pertaining to aircraft systems (such as hydraulic, pneumatic, and electrical). As another example,

UNCONTROLLED COPY WHEN DOWNLOADED
Check with FSIMS to verify current version before using

a flight training curriculum segment is normally divided into flight periods, each of which is a separate module. A training module includes the outline, appropriate courseware, and the instructional delivery methods. It is usually, but not necessarily, completed in a single training session.

KK. Training Program. A system of instruction that includes curricula, facilities, FSTDs, training equipment, instructors, check pilots and check FEs, courseware, instructional delivery methods, and testing and checking procedures. This system must satisfy the training program requirements of part 121 or part 135 and ensure that each crewmember or aircraft dispatcher remains adequately trained for each aircraft, duty position, and kind of operation in which the person serves.

LL. Training/Checking Month (Base Month). The calendar-month during which a flightcrew member is due to receive required recurrent ground or flight training, a required flight check, a required proficiency check, a required competency check, or a required line check. Calendar-month means the first day through the last day of a particular month.

MM. Type Certificate (TC). An aircraft type includes all aircraft that are similar in design produced under a single TC issued, according to 14 CFR part 21 subpart B. Each aircraft type must have a TC before it can be used in air transportation. Aircraft TC determinations are established by an Aircraft Certification Service Office (ACO).

NN. Type Rating. A rating on a pilot certificate for a specific aircraft type. A type rating is required to serve as PIC of a large (over 12,500 pounds gross takeoff weight (GTOW)) aircraft, a turbojet aircraft, or other aircraft when determined necessary by the Administrator. A type rating is also required to serve as SIC in part 121 operations. A type rating is assigned to a single aircraft type, typically make and model (M/M) (e.g., B757). However, in some cases, a different series of the same model may require a different type rating. For example, the B747-100, -200, and -300 series require one type rating (B747), but the B747-400 and -800 require a different type rating (B747-4). An aircraft that has commonality with another aircraft may be assigned a type rating that is considered in common with another type rating (e.g., B757 and B767).

3-1073 AIRCRAFT FAMILIES. There are five basic families of aircraft used in parts 121 and 135 operations. Aircraft are grouped into families according to their performance and flight characteristics to simplify development of training programs. The ground and flight training requirements for flightcrew members are significantly different for each family of aircraft. Within each aircraft family, however, the ground and flight training requirements are similar, even though individual aircraft may be quite different in construction and appearance. The five families of aircraft are as follows:

- Transport category and commuter category airplanes;
- Multiengine turbopropeller and SFAR airplanes;
- Multiengine general purpose airplanes;
- Single-engine general purpose airplanes; and
- Helicopters.

UNCONTROLLED COPY WHEN DOWNLOADED
Check with FSIMS to verify current version before using

NOTE: There are other types of aircraft, such as single-engine turbopropeller, which do not fit in the five families of aircraft. Each of these types of aircraft requires separate training curricula.

A. Transport Category and Commuter Category Airplane Family. The transport category and commuter category airplane family includes all airplanes certified under 14 CFR part 25 (and predecessor rules such as Civil Air Regulations (CAR) 4, 4a, and 4b and Special CARs SR-422, SR-422A, and SR-422B) and those few turbojet airplanes certified under part 23. This family of airplanes also includes those few large airplanes of 30 or more passenger seats certified under Aeronautics Bulletin 7a (DC-3, L-18, C-46), known as large, nontransport airplanes when operated in revenue service. This aircraft family also includes those airplanes certified under part 23 in the commuter category.

B. Multiengine Turbopropeller and SFAR Airplane Family.

1) This aircraft family consists of multiengine turbopropeller airplanes (except those multiengine turbopropeller airplanes included in the transport category and commuter category airplane family) and those airplanes certified under part 23 in the normal category. This family does not include single-engine turbopropeller airplanes.

2) For the purposes of the flight competency check required by § 135.293(b), type, as to an airplane, means any one of a group of airplanes determined by the FAA to have a similar means of propulsion, the same manufacturer, and no significantly different handling or flight characteristics. For example, a pilot who completes a flight competency check in airplane A is not required to complete a flight competency check in airplane B if the FAA has determined that airplane A and airplane B are in the same group. Table 3-33, Multiengine Turbopropeller and SFAR Airplane Groups for the Purposes of the § 135.293(b) Competency Check, lists the specific M/Ms in this aircraft family that the FAA has determined belong to the same group.

3) In cases where an operator requests approval to use one or more full flight simulators (FFS), each FFS must accurately replicate the specific make, model, and series (M/M/S) of the operator's aircraft. In accordance with §§ 121.407 and 135.335, each FSTD must be specifically approved for the operator's use. Typically this is accomplished by including a listing of each approved device in the operator's training program.

Table 3-33. Multiengine Turbopropeller and SFAR Airplane Groups for the Purposes of the § 135.293(b) Competency Check

Group	Models
Beechcraft Turbopropeller	B65-A90, 90, 99, 100, and 200.
Cessna Turbopropeller	Of the 400 Series.
Piper	Cheyenne Series.
Rockwell Commander Turbopropeller	680T, 690V, 680W, and 690.
Fairchild	SA 226-227 Series.

UNCONTROLLED COPY WHEN DOWNLOADED
Check with FSIMS to verify current version before using

C. Multiengine General Purpose Airplane Family.

1) This aircraft family includes all multiengine airplanes certified for operations with nine or fewer passenger seats and not more than 12,500 pounds maximum takeoff weight (MTOW). It does not include any airplanes certified in the transport or commuter category regardless of the MTOW. Pilots operating airplanes in this family must have similar knowledge, skills, and abilities to operate them under part 135. For example, a pilot operating an airplane within this family may be required to have diversified training in short- and soft-field landings, but is not required to have training in takeoff decision speed (V_1) cuts. This type of operation may require specific training, such as seaplane operations.

2) For the purposes of the flight competency check required by § 135.293(b), type, as to an airplane, means any one of a group of airplanes determined by the FAA to have a similar means of propulsion, the same manufacturer, and no significantly different handling or flight characteristics. For example, a pilot who completes a flight competency check in airplane A is not required to complete a competency check in airplane B if the FAA has determined that airplane A and airplane B are in the same group. Table 3-34, Multiengine General Purpose Airplane Groups for the Purposes of the § 135.293(b) Competency Check, lists the specific M/Ms in this aircraft family that the FAA has determined belong to the same group.

Table 3-34. Multiengine General Purpose Airplane Groups for the Purposes of the § 135.293(b) Competency Check

Group	Models
Beechcraft Reciprocating	B50, 55, 56, 57, 58, 60, 70, and 95.
Cessna Reciprocating	T303, C310, 320, 340, and 400 Series.
Cessna Centerline-Thrust	336 and 337.
Piper Reciprocating	PA23, PA30, PA31, PA34, PA39, and PA44.
Rockwell Commander Reciprocating	500, 560, 680, 685, and 720.

D. Single-Engine General Purpose Airplane Family. This aircraft family includes all single-engine airplanes of not more than 12,500 pounds MTOW, other than turbine-powered airplanes. Pilots operating airplanes in this family must have similar knowledge, skills, and abilities to operate them under part 135. For example, pilots operating single-engine airplanes are required to have training that applies to all airplanes in this group, such as forced landing procedures. The type of operation may require specific training, such as seaplane or skiplane training.

E. Helicopter Family. This aircraft family includes all helicopters. Helicopter operations under part 135 require similar knowledge, skills, and abilities. General training requirements for this family of aircraft include such events as autorotation and antitorque failure. The type of operation may require specific training in events such as high-altitude landings or Airborne Radar Approach (ARA) procedures.

UNCONTROLLED COPY WHEN DOWNLOADED
Check with FSIMS to verify current version before using

3-1074 TRAINING PROGRAMS: A SCHEMATIC DEPICTION. Figure 3-68, Schematic Depiction of Training Programs, shows the relationship between the overall training program and the categories of training, curricula, curriculum segments, and training modules.

A. Modular Approach. The illustration in Figure 3-68 is only representative and is intended to present a framework for the modular development of a training program. By using this modular approach, the POI has various strategies available for the evaluation of training effectiveness and the planning of long-term surveillance. These strategies are discussed in Section 2 of this chapter.

B. Parts of the Training Program Depiction. The illustration in Figure 3-68 consists of the following five parts:

1) Part A depicts representative components which, when combined, constitute an operator's overall training program. These components differ in that some must be specifically approved by the FAA (e.g., check pilots), while others are accepted as essential supporting elements (e.g., facilities).

2) Part B illustrates the six categories of training that are recognized by the FAA.

3) Part C is an example of a curriculum that is a complete agenda of training specific to an aircraft type and flightcrew member duty position. This example depicts a PIC B727 transition training curriculum.

4) Part D is an example of a specific curriculum segment and shows that it consists of several training modules. This example is the flight training curriculum segment of the PIC B727 transition training curriculum.

5) Part E is an example of a specific training module. In this case, the module is FFS lesson number four.

UNCONTROLLED COPY WHEN DOWNLOADED
Check with FSIMS to verify current version before using

Figure 3-68. Schematic Depiction of Training Programs

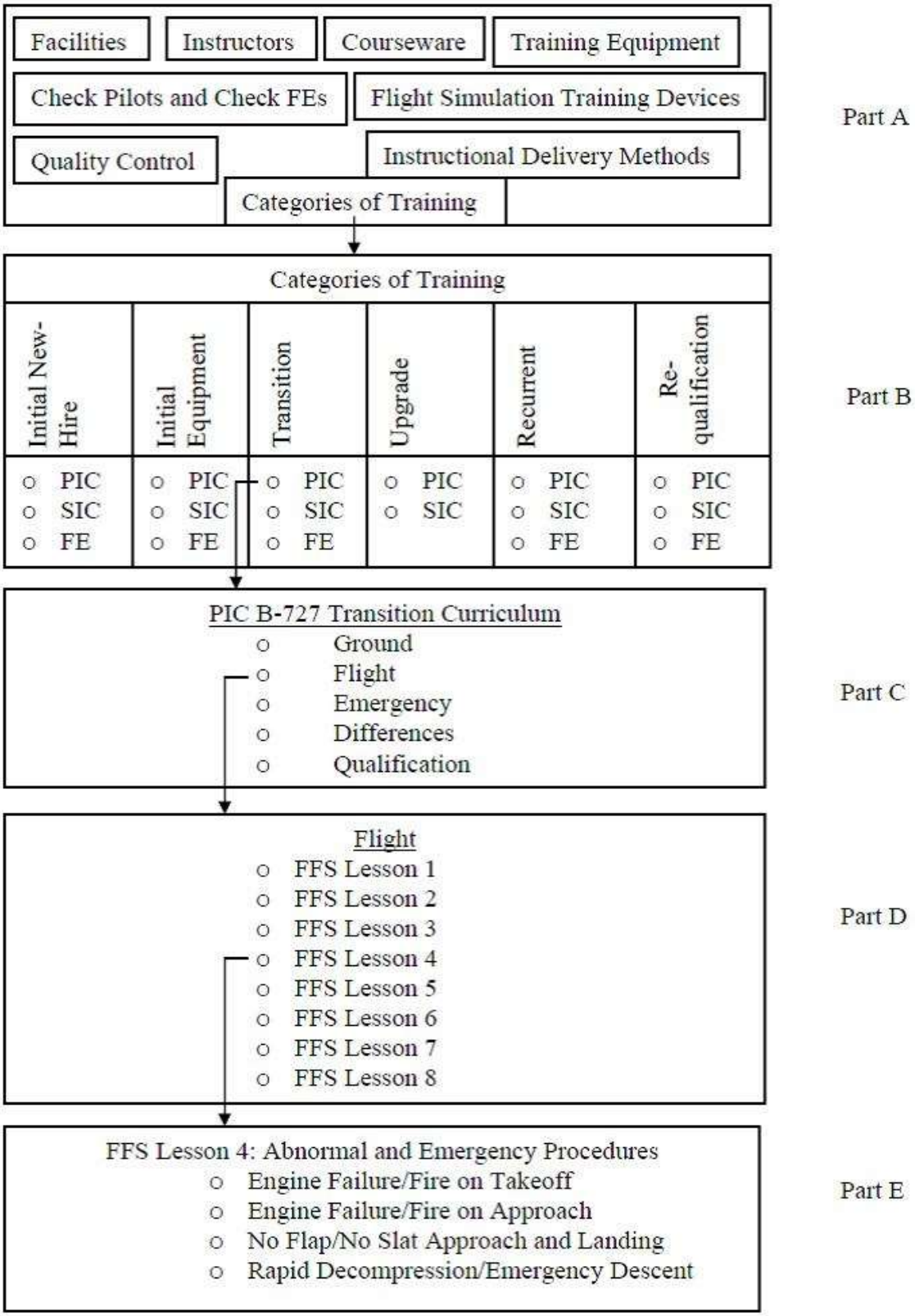

UNCONTROLLED COPY WHEN DOWNLOADED
Check with FSIMS to verify current version before using

3-1075 CATEGORIES OF TRAINING. There are six basic categories of training applicable to parts 121 and 135 operators. The primary factors that determine the appropriate category of training are the student's previous experience with the operator and previous duty position with the operator. Each category of training consists of one or more curricula, each of which is specific to an aircraft type and a duty position (e.g., B727 FE, B727 PIC, and B727 SIC). Training should be identified with and organized according to specific categories of training. When discussing training requirements, FAA inspectors should be specific regarding the category of training being discussed and use the nomenclature described in this order. POIs should encourage operators to use this nomenclature when developing new training curricula or revising existing training curricula. Use of this common nomenclature improves standardization and mutual understanding. The six categories of training are briefly discussed in the following subparagraphs.

A. Initial New-Hire Training. This training category is for personnel who have no previous experience with the operator (e.g., newly hired personnel). It also applies, however, to personnel employed by the operator who have not previously held a flightcrew member duty position with that operator. Initial new-hire training includes basic indoctrination training and training for a specific duty position and aircraft type. Except for a basic indoctrination curriculum segment, the regulatory requirements for initial new-hire and initial equipment training are the same. Since initial new-hire training is usually the employee's first exposure to specific company methods, systems, and procedures, it must be the most comprehensive of the six categories of training. For this reason, initial new-hire training is a distinct, separate category of training and should not be confused with initial equipment training. As defined by this order, initial equipment training is a separate category of training.

B. Initial Equipment Training. This category of training is for personnel who have been previously trained and qualified for a flightcrew member duty position by the operator (i.e., not new hires) and who are being reassigned for any of the following reasons:

1) For part 121 operations, the flightcrew member is being reassigned in one of the following circumstances:

a) Reassignment is to any flightcrew member duty position on an airplane of a different group (as defined by § 121.400, Group I is reciprocating and turbopropeller-powered and Group II is turbojet-powered). For example, a PIC on a DHC8 is reassigned as a PIC on a B717.

b) Reassignment is to a different flightcrew member duty position on a different airplane type, and the flightcrew member has not been previously trained and qualified by the operator for that duty position and airplane type. For example, an SIC on a B737 is reassigned as a PIC on a B757.

2) For part 135 operations, reassignment is to a different flightcrew member duty position on a different aircraft type, and the flightcrew member has not been previously trained and qualified by the operator for that flightcrew member duty position and aircraft type. For example, an SIC on a Cessna 400 series is reassigned as a PIC on a Beechcraft 200.

UNCONTROLLED COPY WHEN DOWNLOADED
Check with FSIMS to verify current version before using

C. Transition Training. This category of training is for a flightcrew member who has been previously trained and qualified for a specific flightcrew member duty position by the operator and who is being reassigned to the same flightcrew member duty position on a different aircraft type. For example, an SIC on a B737 is reassigned as an SIC on an A320. For part 121 operations, the different type aircraft must be in the same group. If the different aircraft is not in the same group, initial equipment training is the applicable category of training.

D. Upgrade Training. This category of training is for a flightcrew member who has been previously trained and qualified as either an SIC or FE by the operator and is being reassigned as either a PIC or SIC, respectively, to the same aircraft type for which the flightcrew member was previously trained and qualified. For example, an SIC on a G-V is reassigned as a PIC on a G-V.

E. Recurrent Training. This category of training is for a flightcrew member who has been trained and qualified by the operator, who will continue to serve in the same duty position and aircraft type, and who must receive recurring training and/or checking within an appropriate eligibility period.

F. Requalification Training. This category of training is for a flightcrew member who has been trained and qualified by the operator but has become unqualified to serve in a particular flightcrew member duty position on an aircraft type due to not having received recurrent ground or flight training and/or a required proficiency check, flight check, line check, or competency check within the appropriate eligibility period. Requalification training is also applicable in the following situations:

- PICs who are being reassigned as SICs on the same aircraft type; and
- PICs and SICs who are being reassigned as FEs on the same aircraft type, provided they were previously qualified as FEs on that aircraft type. If the PIC or SIC was not previously qualified as an FE on that aircraft type, initial equipment training is the applicable category of training.

G. Summary of Categories of Training. The categories of training are summarized in general terms as follows:

1) All personnel not previously employed by the operator as a flightcrew member must complete initial new-hire training.

2) All personnel must complete recurrent training for the duty position and aircraft type for which they are currently assigned within the appropriate eligibility period.

3) All personnel who have become unqualified for a duty position on an aircraft type with the operator must complete requalification training to reestablish qualification for that duty position and aircraft type.

4) All personnel who are being reassigned by the operator to a different duty position and/or aircraft type must complete initial equipment, transition, upgrade, or requalification training, depending on the aircraft type and duty position for which they were previously qualified.

UNCONTROLLED COPY WHEN DOWNLOADED
Check with FSIMS to verify current version before using

NOTE: Table 3-36, Categories of Training in Part 121 Operations, and Table 3-35, Categories of Training in Part 135 Operations, summarize these categories of training for parts 121 and 135, respectively. These tables indicate the appropriate category of training for normal flightcrew member progression or reassignment. They may not address certain situations. The guidance in this paragraph and the requirements of appropriate regulations must be followed when the tables do not address such situations.

Table 3-35. Categories of Training in Part 135 Operations

		New Duty Position			
		PIC 1	PIC 2	SIC 1	SIC 2
Current Duty Position	PIC 1	---	T	R	I
	SIC 1	U	I	---	T

Table key:
1 = a specific aircraft type (different from 2)
2 = a specific aircraft type (different from 1)
I = initial equipment training
R = requalification training
T = transition training
U = upgrade training

Examples:

- Current duty position is pilot in command (PIC) on aircraft type 1. Person is assigned to new duty position as PIC on aircraft type 2. Transition training is required.
- Current duty position is second in command (SIC) on aircraft type 1. Person is assigned to PIC duty position on aircraft type 1. Upgrade training is required.

UNCONTROLLED COPY WHEN DOWNLOADED
Check with FSIMS to verify current version before using

Table 3-36. Categories of Training in Part 121 Operations

		New Duty Position											
		PIC 1A	PIC 1B	PIC 2A	PIC 2B	SIC 1A	SIC 1B	SIC 2A	SIC 2B	FE 1A	FE 1B	FE 2A	FE 2B
Current Duty Position	PIC 1A	---	T	I	I	R	I	I	I	R/I	I	I	I
	PIC 2A	I	I	---	T	I	I	R	I	I	I	R/I	I
	SIC 1A	U	I	I	I	---	T	I	I	R/I	I	I	I
	SIC 2A	I	I	U	I	I	I	---	T	I	I	R/I	I
	FE 1A	I	I	I	I	U	I	I	I	---	T	I	I
	FE 2A	I	I	I	I	I	I	U	I	I	I	---	T

Table key:
1A = a specific Group I airplane type (different from 1B)
1B = a specific Group I airplane type (different from 1A)
2A = a specific Group II airplane type (different from 2B)
2B = a specific Group II airplane type (different from 2A)
I = initial equipment training
R = requalification training
T = transition training
U = upgrade training
R/I = requalification training if previously qualified for the duty position on that airplane type or initial equipment training if not previously qualified for the duty position on that airplane type

Examples:

- Current duty position is pilot in command (PIC) on airplane type 1A. Person is assigned to new duty position as PIC on airplane type 1B. Transition training is required.
- Current duty position is second in command (SIC) on airplane type 1A. Person is assigned to PIC duty position on airplane type 1A. Upgrade training is required.
- Current duty position is PIC on airplane type 2A. Person is assigned to new duty position as PIC on airplane type 1B. Initial equipment training is required.
- Current duty position is PIC on airplane type 2A. Person is assigned to new duty position as Flight Engineer (FE) on airplane type 2A. If the person was previously qualified as FE on airplane type 2A, then requalification training is required. If the person was not previously qualified as FE on airplane type 2A, then initial equipment training is required.

UNCONTROLLED COPY WHEN DOWNLOADED
Check with FSIMS to verify current version before using

3-1076 APPLICABILITY OF TRAINING CATEGORIES. Usually operators will need to conduct training in all six categories of training. Recurrent training applies to all operators. Initial equipment training, transition training, upgrade training, and requalification training apply in most situations. However, transition training is not applicable for an operator who operates only one aircraft type. Initial new-hire training applies to operators who train and qualify newly hired personnel or personnel who have not been previously qualified as flightcrew members by that operator.

3-1077 CURRICULUM DEVELOPMENT. Operators must develop one or more curricula for each category, specific duty position, and aircraft type in which the operator conducts training.

A. Required Curricula. The operator is required to develop and maintain only those curricula that will be used. For example, if an operator specifies that all newly hired pilots must be trained first as B727 FEs, the appropriate curriculum for that category of training would be B727 FE initial new-hire training. The operator would not be required to develop any initial new-hire pilot training curricula for other aircraft or duty positions. Another example would be if a part 135 operator specifies that all newly hired pilots must be trained first as SICs on the BE99, then only a BE99 SIC initial new-hire training curriculum would need to be developed and maintained.

B. Single-Engine General Purpose Airplanes. A part 135 operator may include all M/Ms of airplanes of the single-engine general purpose family in a single curriculum for each category and duty position, provided the curriculum includes airplane-specific training for each M/M. For example, a single-engine PIC initial new-hire training curriculum may include both Cessna 172 and Piper PA28 airplanes, provided the curriculum includes training on the specifics for each M/M (e.g., operating limitations, systems, and performance).

NOTE: Single-engine turbine-powered airplanes are not included in the single-engine general purpose family. Separate curricula are required for each type of single-engine turbine-powered airplane.

C. Multiengine General Purpose Airplanes. A part 135 operator may include all multiengine general purpose airplanes that have been determined to be in the same group in a single curriculum for each category and duty position, provided the curriculum includes airplane-specific training for each model. (See Table 3-34 for the airplanes in this family that the FAA has determined belong to the same group.) For example, a Cessna multiengine reciprocating PIC initial equipment curriculum may include both the Cessna 310 and Cessna 320, provided the curriculum includes training on the specifics for each airplane type (e.g., operating limitations, systems, and performance).

D. Multiengine Turbopropeller and SFAR Airplanes. A part 135 operator may include all multiengine turbopropeller or SFAR airplanes that have been determined to be in the same group in a single curriculum for each category and duty position, provided the curriculum includes airplane-specific training for each model. (See Table 3-33 for the airplanes in this family that the FAA has determined belong to the same group.) For example, a Beechcraft multiengine turbopropeller PIC transition curriculum may include both the Beechcraft 100 and

UNCONTROLLED COPY WHEN DOWNLOADED
Check with FSIMS to verify current version before using

Beechcraft 200, provided the curriculum includes training on the specifics for each airplane type (e.g., operating limitations, systems, and performance).

E. Transport Category and Commuter Category Airplanes. An operator must develop a curriculum for each airplane type in the transport category and commuter category family. An operator may include all models of a specific airplane type in a single curriculum for each category and duty position. Operators must provide differences training to qualify crewmembers in different models, series, or variations of the same airplane type.

F. Helicopters. An operator must develop a curriculum for each helicopter type. An operator may include all models of a specific helicopter type in a single curriculum for each category and duty position. Operators must provide differences training to qualify crewmembers in different models, series, or variations of the same helicopter type.

G. Curriculum Outlines. Curriculum outlines are documents used by operators to specify the curriculum content. Outlines must contain at least the information specified in Volume 3, Chapter 19, Section 2. This information is required so that the POI can determine whether the operator's curriculum meets regulatory requirements during phase three of the approval process (see Volume 3, Chapter 19, Section 2). Curriculum outlines should contain enough detail so that lesson plans can later be constructed from them. Detailed information should be placed in lesson plans, training manuals, and other documents maintained by the operator. This material is reviewed during phase four of the approval process (see Volume 3, Chapter 19, Section 2).

H. Curriculum Segments. Curriculum segments that make up a curriculum depend upon the category of training and the duty position. Curriculum segments are titled as follows:

- Basic Indoctrination—§ 121.415(a)(1) or § 135.329(a)(1);
- Crew Resource Management Training—§ 135.330;
- Aircraft Ground Training—§ 121.419 or § 135.345;
- Emergency Training—§§ 121.417 and 121.805 or § 135.331;
- Flight Training—§ 121.424, § 121.425, part 121 appendix E, part 121 appendix H, or § 135.347;
- Differences Training—§ 121.418(a) or § 135.341(b)(4);
- Related Aircraft Differences Training—§ 121.418(b);
- Special Curriculum Segment—various rules depending on the operation;
- Hazardous Materials (Will-Carry or Will-Not-Carry)—§§ 121.1001 through 121.1007, part 121 appendix O, or §§ 135.501 through 135.507, part 121 appendix O; and
- Qualification Segment—part 121 subpart O, part 121 appendix F, or part 135 subparts E and G.

I. Completion Requirements. Each person required to train under a curriculum must complete that curriculum in its entirety. Each student must satisfactorily complete all curriculum segments prescribed by an approved training curriculum. When a person has completed the training and checking specified by a curriculum, that person is qualified to serve in a specific duty position on a specific aircraft type.

UNCONTROLLED COPY WHEN DOWNLOADED
Check with FSIMS to verify current version before using

3-1078 MULTIPLE CURRICULA OF A SINGLE CATEGORY. Operators may develop and have multiple curricula approved for any single duty position and aircraft type. These curricula may have different programmed or planned hours based on the flightcrew member's previous knowledge and skill. For example, a part 135 operator may develop initial new-hire training curricula for:

- Pilots that have previous experience in part 135 operations in the same aircraft type and flightcrew member duty position;
- Pilots that have previous experience in part 135 operations in the same aircraft type, but in a different flightcrew member duty position;
- Pilots that have previous experience in part 135 operations in a different aircraft type; or
- Pilots that have previous experience in 14 CFR part 91 subpart K (part 91K) operations.

NOTE: In these examples, each curriculum would have different programmed or planned hours to reflect the flightcrew member's level of knowledge and skill related to the certificate holder's operation or aircraft. Regardless of an individual's previous qualifications, it is the operator's responsibility to ensure that each individual is proficient and fully qualified in the operator's procedures and operations prior to authorizing the individual to operate as a required flightcrew member.

A. Prerequisites. Operators that choose to develop multiple curricula must clearly specify the prerequisites for entry into each specific curriculum. Examples of prerequisites include the following:

- Documentation of a competency check within the last 12 calendar-months;
- Minimum total flight-hours;
- Minimum flight-hours in type or class, as appropriate; and
- Documentation of experience as a flightcrew member in operations under the same part.

NOTE: The flightcrew member's permanent training record must include a certification and record that verifies that the flightcrew member meets or exceeds the prerequisites of the reduced training hour curriculum. When the operator enters the certification in a computerized recordkeeping system, the certifying company official who made the determination must be identified with that entry.

B. Limitations—Part 135. Reduced training hour curricula may be developed for initial new-hire, initial equipment, transition, or upgrade training, and must contain all the elements and events of the full curriculum. Reductions may be made in planned hours for aircraft-specific systems ground training and/or flight training based on a crewmember's previous knowledge and skill. However, reductions in planned hours based on a crewmember's previous knowledge or skill may not be made for certificate-holder-specific modules, including, but not limited to:

UNCONTROLLED COPY WHEN DOWNLOADED
Check with FSIMS to verify current version before using

1) Basic indoctrination (§ 135.329).

2) Hazardous materials (hazmat) (§ 135.505), except as provided for in § 135.505(c), if the flightcrew member works for more than one certificate holder concurrently.

3) Emergency training (§ 135.331).

4) Crew Resource Management (CRM) training (§ 135.330).

5) Other certificate-holder-specific modules, such as those required by a certificate holder's OpSpecs or those determined by the certificate holder's POI.

NOTE: Reductions may not be made to the planned hours for any portion of recurrent training (except for hazmat, as provided for in § 135.505(c), if the flightcrew member works for more than one certificate holder concurrently).

NOTE: An individual must also satisfactorily complete the certificate holder's evaluation and qualification modules (e.g., required written/oral exams, competency and proficiency checks, line checks, and OE) before the certificate holder assigns him or her as a required flightcrew member. Reductions may not be made to the evaluation and qualification modules.

C. Limitations—Part 121. Reduced training hour curricula may be developed for initial new-hire, initial equipment, transition, or upgrade training, and must contain all the elements and events of the full curriculum. Reductions in programmed hours must be approved by the POI in accordance with § 121.405. See Volume 3, Chapter 19, Sections 3, 5, and 6 for additional information regarding reductions in programmed hours for part 121.

D. Flightcrew Members Employed by Multiple Operators. A flightcrew member who is employed (directly or by contract) by multiple operators concurrently must complete the applicable training curricula, including recurrent training, for each operator. In addition, the flightcrew member must satisfactorily complete each operator's checking and qualification modules, including recurrent checking.

3-1079 TRAINING MODULE CONSTRUCTION (ELEMENTS OR EVENTS). Curriculum segments consist of training modules. Training modules are in turn constructed of elements or events arranged in a logical sequence. Curriculum segments and modules should be constructed so that instruction proceeds from the most basic concept and skill to the more advanced, in a building block approach. The scope and content of each training module depends upon the category of training and the curriculum in which the curriculum segment is to be incorporated. The number and content of modules for a particular curriculum segment may vary from one category of training to another. For example, aircraft ground training modules in the upgrade training category may not need to be as comprehensive as the aircraft ground training modules in the initial equipment category of training. The amount of detail in each module determines the training hours necessary to complete the training required by a curriculum segment.

UNCONTROLLED COPY WHEN DOWNLOADED
Check with FSIMS to verify current version before using

A. Example Training Module Outlines. Operators should present training modules to the POI in outline form for initial approval. Figure 3-69, Example of Related Elements in an Aircraft Ground Training Module Outline, and Figure 3-79, Example of Related Events in a Flight Training Module Outline, are examples of training module outlines. These are only examples and are not intended to imply the only acceptable methods, sequence of instructional delivery, subject titles, or amount of detail.

Figure 3-69. Example of Related Elements in an Aircraft Ground Training Module Outline

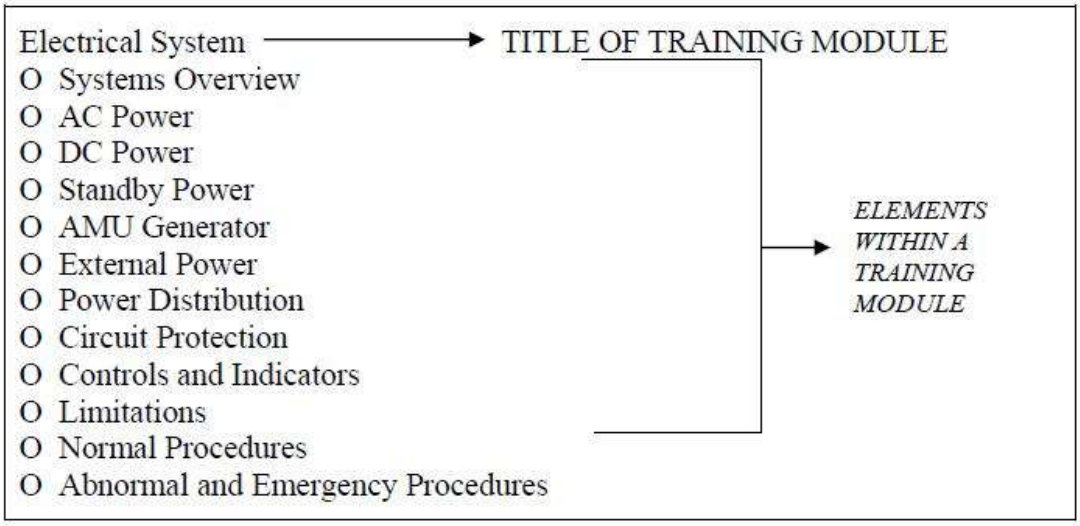

Figure 3-79. Example of Related Events in a Flight Training Module Outline

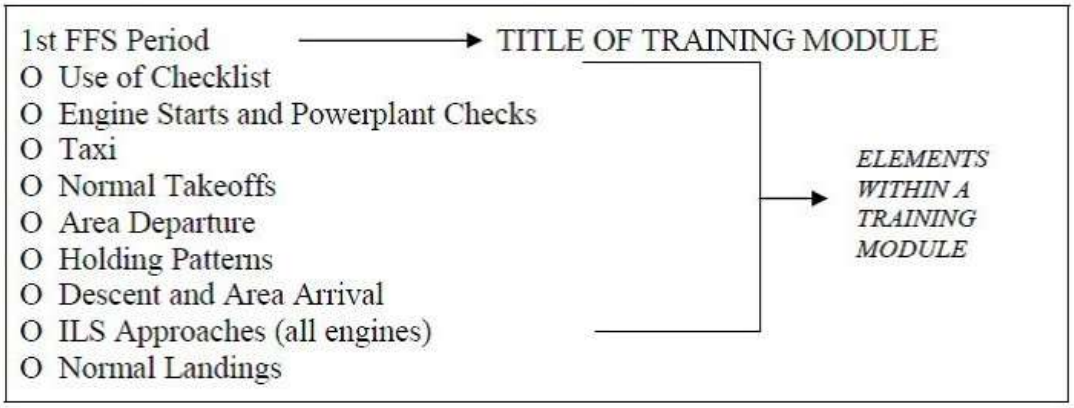

B. Details in Training Module Outline. Operators must construct training module outlines with enough detail to ensure that the POI can identify that the essential features of the subject have been addressed and that regulatory requirements have been met. The training module outline will serve as a foundation from which the operator will develop complete and usable courseware and select appropriate instructional delivery methods. The effectiveness

UNCONTROLLED COPY WHEN DOWNLOADED
Check with FSIMS to verify current version before using

of courseware and instructional delivery methods cannot be evaluated before training begins and must, therefore, be evaluated during phase four of the approval process.

1) Adjustment to Training Module Outlines. Once approved, training module outlines normally remain relatively fixed, requiring adjustment only when new elements or events are introduced. For example, if the operator proposed to install Automatic Dependent Surveillance-Broadcast (ADS-B) equipment in his or her aircraft, existing training module outlines would need to be revised to include ground and flight training of ADS-B. A revision to a training module outline must be approved by the POI.

2) Adjustment to Courseware. The operator has the flexibility to make adjustments to courseware as long as the adjustment does not add or delete elements or events from the training module outline. The POI must approve any changes (e.g., adding or deleting elements or events) to the training module outline. POIs may also find it necessary, on the basis of surveillance reports or other information, to require the operator to modify courseware, instructional delivery methods, and training module outlines.

C. Using a Training Module in Multiple Curricula and Categories of Training. A single training module may be used in more than one curriculum and in more than one category of training. For example, a training module that specifies a review of emergency evacuation procedures for recurrent training could be the same for requalification training. POIs should, however, encourage operators to develop courseware that places emphasis on the particular category of training. For example, PIC upgrade training should emphasize duty position responsibilities. The emphasis in SIC upgrade training (FE to SIC), however, should be on piloting skills as well as on the requirements of the new duty position. Transition training should emphasize aircraft systems and the procedures and piloting skills needed to operate a different aircraft type. In many cases, operators may develop different sets of courseware from a single training module outline to cover differences in emphasis.

RESERVED. Paragraphs 3-1080 through 3-1094.

UNCONTROLLED COPY WHEN DOWNLOADED
Check with FSIMS to verify current version before using

VOLUME 3 GENERAL TECHNICAL ADMINISTRATION

CHAPTER 19 TRAINING PROGRAMS AND AIRMAN QUALIFICATIONS

Section 7 Safety Assurance System: Flightcrew Qualification Curriculum Segments

Source Basis:

- **Section 61.157, Flight Proficiency.**
- **Section 61.159, Aeronautical Experience: Airplane Category Rating.**
- **Section 61.160, Aeronautical Experience—Airplane Category Restricted Privileges.**
- **Section 121.400, Applicability and Terms Used.**
- **Section 121.401, Training Program: General.**
- **Section 121.403, Training Program: Curriculum.**
- **Section 121.407, Training Program: Approval of Airplane Simulators and Other Training Devices.**
- **Section 121.409, Training Courses Using Airplane Simulators and Other Training Devices.**
- **Section 121.415, Crewmember and Dispatcher Training Program Requirements.**
- **Section 121.418, Differences Training and Related Aircraft Differences Training.**
- **Section 121.425, Flight Engineers: Initial and Transition Flight Training.**
- **Section 121.431, Applicability.**
- **Section 121.433, Training Required.**
- **Section 121.434, Operating Experience, Operating Cycles, and Consolidation of Knowledge and Skills.**
- **Section 121.436, Pilot Qualification: Certificates and Experience Requirements.**
- **Section 121.439, Pilot Qualification: Recent Experience.**
- **Section 121.440, Line Checks.**
- **Section 121.441, Proficiency Checks.**
- **Section 121.445, Pilot in Command Airport Qualification: Special Areas and Airports.**
- **Section 121.453, Flight Engineer Qualifications.**
- **Appendix F to Part 121, Proficiency Check Requirements.**
- **Appendix H to Part 121, Advanced Simulation.**
- **Section 135.243, Pilot in Command Qualifications.**
- **Section 135.244, Operating Experience.**
- **Section 135.245, Second in Command Qualifications.**
- **Section 135.247, Pilot Qualifications: Recent Experience.**
- **Section 135.291, Applicability.**
- **Section 135.293, Initial and Recurrent Pilot Testing Requirements.**
- **Section 135.297, Pilot in Command: Instrument Proficiency Check Requirements.**
- **Section 135.299, Pilot in Command: Line Checks: Routes and Airports.**
- **Section 135.301, Crewmember: Tests and Checks, Grace Provisions, Training to Accepted Standards.**
- **Section 135.321, Applicability and Terms Used.**
- **Section 135.323, Training Program: General.**

UNCONTROLLED COPY WHEN DOWNLOADED
Check with FSIMS to verify current version before using

- **Section 135.327, Training Program: Curriculum.**
- **Section 135.329, Crewmember Training Requirements.**
- **Section 135.335, Approval of Aircraft Simulators and Other Training Devices.**
- **Section 135.341, Pilot and Flight Attendant Crewmember Training Programs.**

3-1271 GENERAL. This section contains direction and guidance concerning qualification curriculum segments and qualification modules. A qualification curriculum segment is the final segment of each of the six categories of training defined in Volume 3, Chapter 19, Section 1. A qualification curriculum segment is composed of the testing, checking, and experience modules that a flightcrew member must successfully complete after formal training and before being qualified to serve unsupervised as a required flightcrew member in Title 14 of the Code of Federal Regulations (14 CFR) part 121 or 135 operations. This section is related to Safety Assurance System (SAS) Element 2.1.5 (OP) Appropriate Airmen/Crewmember Checks and Qualifications.

A. Primary Objectives. A qualification curriculum segment has the following primary objectives:

- To ensure that each flightcrew member has reached an acceptable level of proficiency in all assigned duties before being released from training and supervision; and
- To provide a means for measuring the effectiveness of the training program, and for identifying and correcting training deficiencies.

B. Guidance Application. The guidance in this section applies to the development and approval of qualification curriculum segments for both parts 121 and 135 training curricula. In general, equivalent qualification modules are required by both of these regulatory parts. Differences do exist, however, between parts 121 and 135 curriculum segments in both terminology and details. When the guidance in this section applies specifically to one flightcrew member duty position or regulatory part, the duty position or regulatory part will be specified.

3-1272 TYPES OF QUALIFICATION MODULES. Qualification curriculum segments are composed of qualification modules. Qualification modules are generally divided into testing, checking, and experience modules.

A. Definitions. Definitions of terms are located in Volume 3, Chapter 19, Section 1, Scope, Concepts, and Definitions.

B. Experience Modules. Title 14 CFR requires that experience modules be completed before a flightcrew member performs unsupervised and without restriction in revenue service. Other experience modules are required for special authorizations or to reestablish recency of experience. One or more of the following experience modules may be required in a qualification curriculum segment:

- Line-Oriented Flight Training (LOFT) (part 121 appendix H),
- Operating Experience (OE) and operating cycles (part 121, § 121.434 or part 135, § 135.244),

UNCONTROLLED COPY WHEN DOWNLOADED
Check with FSIMS to verify current version before using

- Line operating flight time for consolidation of knowledge and skills (§ 121.434),
- Pilot-in-command (PIC) experience (required to use standard landing minimums),
- Special operations experience (such as Class II long-range navigation), and/or
- Recent experience (to reestablish recency of experience for takeoffs and landings or instrument experience).

3-1273 FORMAT OF QUALIFICATION CURRICULUM SEGMENTS. The content of a qualification curriculum segment for part 121 operations is almost entirely controlled by regulation. A part 121 operator may, however, use more than one means of accomplishing these requirements. For example, an operator could conduct checks for most categories of training in a level C full flight simulator (FFS). In such a case, the operator would be required to conduct a LOFT module after the completion of the basic checking module. An operator that uses a level A FFS would be required to conduct the basic checking module in the FFS and a second module in the airplane. The requirements of a part 135 competency check are not specified in 14 CFR, but are left to the discretion of the Administrator and the check pilot conducting the check. To ensure that a clear understanding exists between the operator and the Federal Aviation Administration (FAA), the principal operations inspector (POI) should require that the operator list each element or event in a qualification module along with the flight simulation training device (FSTD) or aircraft to be used. The operator's format may either be a simple outline, a table such as those contained in Table 3-70, Part 135 Checking Modules—Airplanes, and Table 3-71, Part 135 Checking Modules—Helicopters, or any other format that the POI finds clearly establishes the methods to be used and elements and events to be checked.

3-1274 PART 121 REQUIRED CERTIFICATES AND RATINGS (§ 121.436). All flightcrew members must hold specific certificates and ratings before performing duties in part 121 revenue service. If a flightcrew member does not hold the required certificates and/or ratings, they must be obtained when the flightcrew member completes the qualification curriculum segment.

A. PIC. A PIC in part 121 operations must hold the following:

- Airline Transport Pilot (ATP) Certificate,
- Appropriate aircraft type rating, and
- First-class medical certificate.

B. Second in Command (SIC).

1) An SIC in part 121 domestic operations must hold the following:

- An ATP Certificate (or an ATP Certificate with restricted privileges),
- Appropriate aircraft type rating, and
- At least a second-class medical certificate.

2) An SIC in part 121 flag or supplemental operations requiring only two pilots must hold the following:

UNCONTROLLED COPY WHEN DOWNLOADED
Check with FSIMS to verify current version before using

- An ATP Certificate (or an ATP Certificate with restricted privileges),
- Appropriate aircraft type rating, and
- At least a second-class medical certificate.

3) An SIC in part 121 flag or supplemental operations requiring three or more pilots must hold the following:

- An ATP Certificate (In this scenario, a pilot must hold an ATP Certificate issued per the requirements of 14 CFR part 61, § 61.159. An ATP Certificate issued per the reduced flight hours in § 61.160 is not sufficient.);
- Appropriate aircraft type rating; and
- A first-class medical certificate.

C. Flight Engineer (FE). An FE must hold the following:

- FE Certificate,
- Applicable class rating, and
- At least a second-class medical certificate.

3-1275 PART 135 REQUIRED CERTIFICATES AND RATINGS (§ 135.243). All pilots must hold specific certificates and ratings before performing duties in part 135 revenue service.

A. Pilot Certification Requirements—Airplanes. Pilot certification requirements for part 135 airplane operations depend on the kind of operation being conducted and the type of airplane used.

1) PICs conducting passenger-carrying operations in a turbojet airplane or any airplane having 10 or more passenger seats (excluding any crewmember seat), or any commuter flight in a multiengine airplane regardless of the number of passenger seats must hold the following:

a) ATP Certificate.

b) Airplane category rating.

c) Class rating (as appropriate):

- Airplane Single-Engine Land (ASEL),
- Airplane Multiengine Land (AMEL),
- Airplane Single-Engine Sea (ASES), or
- Airplane Multiengine Sea (AMES).

d) Type rating (as appropriate).

e) First-class medical certificate.

UNCONTROLLED COPY WHEN DOWNLOADED
Check with FSIMS to verify current version before using

2) PICs conducting part 135 flight operations in airplanes other than those described in subparagraph 3-1275A1) must hold the following:

a) ATP Certificate or Commercial Pilot Certificate with instrument–airplane rating.

b) Airplane category rating.

c) Class rating (as appropriate):

- ASEL,
- AMEL,
- ASES, or
- AMES.

d) At least a second-class medical certificate.

3) SICs conducting any part 135 airplane operations must hold the following:

a) ATP Certificate or Commercial Pilot Certificate with instrument–airplane rating.

b) Airplane category rating.

c) Class rating (as appropriate):

- ASEL,
- AMEL,
- ASES, or
- AMES.

d) At least a second-class medical certificate.

NOTE: Certain pilots conducting part 135 visual flight rules (VFR)-only operations with single-engine reciprocating-powered airplanes in isolated areas, not a commuter operation, and not transporting contract mail, may be relieved of the requirement to hold an instrument rating in accordance with § 135.243(d) and authorized by operations specification (OpSpec) A020.

B. Pilot Certification Requirements—Helicopters. The pilot certification requirements for pilots conducting part 135 helicopter operations are as follows:

1) All PICs and SICs must hold at least the following:

- Commercial Pilot Certificate or ATP Certificate, as appropriate;
- Rotorcraft category rating;
- Helicopter class rating; and
- At least a second-class medical certificate.

UNCONTROLLED COPY WHEN DOWNLOADED
Check with FSIMS to verify current version before using

2) All PICs must hold a type rating, if a type rating is required.

3) PICs conducting part 135 instrument flight rules (IFR) or VFR over-the-top operations in helicopters must hold a helicopter instrument rating or an ATP Certificate that is not limited to VFR.

3-1276 PART 121 MINIMUM PIC FLIGHT EXPERIENCE REQUIREMENTS (§ 121.436). A PIC in part 121 operations must have a minimum of 1,000 flight hours in air carrier operations as an SIC in part 121 operations, a PIC in operations under either § 135.243(a)(1) or 14 CFR part 91, § 91.1053(a)(2)(i), or any combination of these. In addition, military PIC time (up to 500 hours) in a multiengine turbine-powered, fixed-wing airplane in an operation requiring more than one pilot may also be credited towards the 1,000 hours.

3-1277 PART 135 MINIMUM PIC FLIGHT EXPERIENCE REQUIREMENTS. Section 135.243(b) and (c) require that a PIC who does not hold an ATP Certificate and who conducts operations that do not require an ATP Certificate must have acquired a minimum number of flight hours before serving as a PIC.

A. VFR Requirements. Before serving as a PIC in a VFR operation, the pilot must have accumulated at least the following flight hour experience:

- 500 total pilot flight hours,
- 100 cross-country flight hours, and
- 25 night, cross-country flight hours.

B. IFR Requirements. Before serving as a PIC in an IFR operation, the pilot must have accumulated at least the following flight hour experience:

- 1,200 total pilot flight hours,
- 500 cross-country flight hours,
- 100 night flight hours, and
- 75 actual or simulated instrument flight hours, 50 of which must have been in actual flight.

NOTE: See Volume 5, Chapter 3 for guidance concerning the crediting of flight time in airplanes and helicopters to meet these requirements.

3-1278 THE BASIC CHECKING MODULE. The basic checking modules for both parts 121 and 135 are composed of two parts: one part consists of the written or oral test elements, and the other part consists of the flight check events. Although they are distinct and separate parts, when combined, they make up a single checking module.

A. Basic Checking Module Content. The subject areas that must be addressed in the written or oral test for the part 121 basic checking module are described in part 121 appendix F. The subject areas that must be addressed in the written or oral test for the part 135 basic checking module are described in § 135.293(a) and, for those PICs conducting IFR operations, in § 135.297(c). These regulations require a written or oral test element as a distinct part of the

UNCONTROLLED COPY WHEN DOWNLOADED
Check with FSIMS to verify current version before using

basic checking module. The basic checking modules required for parts 121 and 135 are further discussed in paragraphs 3-1279 and 3-1280, respectively.

B. Performance Standards. In parts 121 and 135 operations, a higher standard of proficiency may be required than that required for initial pilot certification. The standard required for basic checks is at least that required for obtaining the certificate which must be held to act as a PIC. For example, an SIC holding a commercial certificate with an instrument rating who is making an instrument landing system (ILS) approach in a G-V must perform to the same standard of proficiency as the PIC seated in the left seat who holds an ATP Certificate and a G-V type rating. POIs should bring the following guidance in Volume 5 pertaining to proficiency and competency checks (Table 3-69, Guidance Pertaining to Proficiency and Competency Checks) to the operator's and check pilot's attention:

Table 3-69. Guidance Pertaining to Proficiency and Competency Checks

Section	Paragraph
Volume 5, Chapter 1, Section 1	Subparagraphs 5-7B–D and Paragraph 5-8
Volume 5, Chapter 1, Section 3	Subparagraphs 5-57A–E and Subparagraphs 5-58A–H
Volume 5, Chapter 3, Section 2	Subparagraphs 5-827A–D
Volume 5, Chapter 3, Section 3	Subparagraphs 5-858C–H and Paragraphs 5–859 through 5-862
Volume 5, Chapter 3, Section 4	Paragraphs 5-886 through 5-892
Volume 5, Chapter 3, Section 5	Paragraphs 5-907 through 5-916
Volume 5, Chapter 3, Section 6	Paragraphs 5-937 and 5-939 through 5-944

C. Use of FSTDs. An operator may take maximum advantage of FSTDs in designing qualification curriculum segments. For example, an operator may evaluate a PIC and an SIC simultaneously on many normal, non-normal, and emergency procedures when an FFS is used. POIs should encourage operators to design qualification modules accordingly.

D. LOFT. A LOFT module is considered to be part of the qualification curriculum segment, but it is a training event, not a checking event. A pilot who qualifies for a certificate or rating in a level C or D FFS is issued the certificate or rating immediately after satisfactorily completing the basic check. The pilot is not qualified to either exercise the privileges of the certificate or rating or enter revenue service until the pilot has successfully completed the LOFT module.

3-1279 PART 121 BASIC CHECKING MODULE. The basic checking module required in part 121 is referred to as a proficiency check for pilots and a flight check for FEs. Unless the Air Transportation Division (AFS-200) has authorized a deviation in accordance with § 121.441(f), a proficiency check for pilots consists of the written or oral elements and the flight events specified in part 121 appendix F. Figure 3-80, Pilot Proficiency Check (Part 121), summarizes the elements and events that make up a proficiency check. A proficiency check

UNCONTROLLED COPY WHEN DOWNLOADED
Check with FSIMS to verify current version before using

qualifies pilots for both VFR and IFR Class I navigation and instrument approaches to standard minimums (Category (CAT) I Approach, if approved for the operator). Operations such as CAT II Approach or CAT III Approach require additional checking modules. For an FE, the flight check consists of the flight events summarized in Figure 3-81, Flight Engineer Flight Check (Part 121). Although part 121 does not specifically require a written or oral test element as part of the FE flight check, it is an FAA safety policy that a written or oral test be part of the FE flight check. POIs must ensure the test is included as an element of the basic checking module.

Figure 3-80. Pilot Proficiency Check (Part 121)

ORAL OR WRITTEN EQUIPMENT EXAM **Both**

GROUND OPERATIONS

- Preflight inspection ..... Both
- Taxiing/runway operations ..... Both[1]
- Powerplant checks ..... Both
- Pretakeoff procedures ..... Both[2]

TAKEOFFS

- Normal ..... Both
- Instrument ..... Both
- Crosswind ..... Both[3]
- With powerplant failure ..... Both
- Rejected takeoff ..... Both*[4]

INSTRUMENT PROCEDURES

- Area departure..... Both*
- Area arrival ..... Both*
- Holding ..... Both*
- Normal ILS approach..... Both
- Manually Controlled Engine-out ILS ..... Both
- Coupled ILS approach ..... Both[4]
- Nonprecision approach ..... Both
- Second nonprecision approach..... Both
- EFVS approach ..... Both[5]
- Missed approach from an ILS..... Both
- Second missed approach ..... PIC
- Circling approach..... Both*[6]

IN-FLIGHT MANEUVERS

- Steep turns..... PIC*
- Specific flight characteristics..... Both
- Stall prevention (approaches to stalls) ..... Both*
- Powerplant failure..... Both

UNCONTROLLED COPY WHEN DOWNLOADED
Check with FSIMS to verify current version before using

LANDINGS

- Two-engine inoperative landing ..... Both
  (three- and four-engine aircraft)
- Normal landing ..... Both
- Landing from an ILS..... Both
- Crosswind landing ..... Both[7]
- Landing with engine out ..... Both
- Landing from circling approach..... Both*[6]
- Rejected landing..... Both
- EFVS landing..... Both[8]

NORMAL, ABNORMAL, NON-NORMAL, and EMERGENCY PROCEDURES

- At check pilot's discretion ..... Both*[9,10]

NOTES:

"Both:" The term "both" applies to pilots in command (PIC) and seconds in command (SIC).

* May be waived under certain conditions. (See Volume 5, Chapter 3, Section 2.)

[1] Beginning March 12, 2019, the taxiing maneuver must include (1) use of airport diagram (surface movement chart); (2) obtaining appropriate clearance before crossing or entering active runways; and (3) observation of all surface movement guidance control markings and lighting.

[2] Beginning March 12, 2019, pretakeoff procedures must include (1) receipt of takeoff clearance and confirmation of aircraft location; and (2) flight management system (FMS) entry, if appropriate, for the departure runway prior to crossing hold-short line for takeoff.

[3] Beginning March 12, 2019, crosswind takeoffs must include crosswind takeoffs with gusts. For training conducted in an airplane in flight, crosswind takeoffs with gusts are only required if practicable under the existing meteorological, airport, and traffic conditions.

[4] PIC and SIC may both simultaneously take credit for this event.

[5] For each type of enhanced flight vision system (EFVS) operation the certificate holder is authorized to conduct, at least one instrument approach must be made using an EFVS. Therefore, if the certificate holder is authorized to conduct operations under both 14 CFR part 91, § 91.176(a) EFVS operations to touchdown and rollout and § 91.176(b) EFVS operations to 100 feet above the touchdown zone elevation (TDZE), two instrument approaches must be made using an EFVS in each condition.

[6] When the operator is authorized by OpSpec C075 to conduct circling approaches. (This is not required for SICs if the operator's manual prohibits SICs from making this approach.)

[7] Beginning March 12, 2019, crosswind landings must include crosswind landings with gusts. For training conducted in an airplane in flight, crosswind landings with gusts are only required if practicable under the existing meteorological, airport, and traffic conditions.

[8] If the certificate holder is authorized to conduct EFVS operations to touchdown and rollout, at least one instrument approach to a landing must be made using an EFVS, including the use of enhanced flight vision from 100 feet above the TDZE to touchdown and rollout. If the certificate holder is authorized to conduct EFVS operations to 100 feet above the TDZE, at least one instrument approach to a landing must be made using an EFVS, including the transition from enhanced flight vision to natural vision at 100 feet above the TDZE.

[9] See guidance contained in Volume 5, Chapter 3, Section 2.

[10] The check pilot is authorized to evaluate any event required for the ATP Certificate. (See Volume 5, Chapter 3, Section 2.)

UNCONTROLLED COPY WHEN DOWNLOADED
Check with FSIMS to verify current version before using

Figure 3-81. Flight Engineer Flight Check (Part 121)

NORMAL PROCEDURES

- Oral or written examination;
- Exterior preflight;
- Interior preflight;
- Panel setup;
- Fuel load;
- Engine start procedures;
- Taxi and before-takeoff procedures;
- Takeoff and climb;
- Pressurization;
- Cruise and fuel management;
- Descent and approach;
- After landing and securing;
- Crew coordination;
- Situational awareness, traffic scan, etc.;
- Performance computations; and
- Anti-ice, deice.

NON-NORMAL AND EMERGENCY PROCEDURES

Sample as many non-normal and emergency procedures as needed to evaluate performance:

- Troubleshooting;
- Knowledge of checklist;
- Ability to perform procedures;
- Crew coordination; and
- Minimum equipment list (MEL) and Configuration Deviation List (CDL).

3-1280 PART 135 BASIC CHECKING MODULE. The flight test required to qualify a pilot for revenue service is termed a basic checking module when listed in a curriculum outline. Operators must design the basic checking module of a part 135 curriculum to satisfy the requirements of § 135.293. In addition, operators must satisfy the requirements of § 135.297 for PICs conducting IFR operations. Those operators whose PICs are authorized to use an autopilot in lieu of an SIC in IFR operations must include a demonstration of these skills in the basic checking module. This paragraph contains guidance POIs will use to review and approve basic checking modules and to conduct these checks.

A. Section 135.293(a) Requirements. All pilots who are qualifying in an aircraft type are required by § 135.293(a) to satisfactorily complete a written or oral test before entering revenue service and annually thereafter. The test must evaluate the pilot's knowledge in the following areas:

1) The appropriate provisions of parts 61, 91, and 135 and the OpSpecs and manual of the air carrier/operator.

UNCONTROLLED COPY WHEN DOWNLOADED
Check with FSIMS to verify current version before using

2) For each type of aircraft to be flown by the pilot, the aircraft powerplant, major components and systems, major appliances, performance and operating limitations, standard and emergency operating procedures, and the contents of the approved Airplane Flight Manual (AFM) or Rotorcraft Flight Manual (RFM), as applicable.

3) For each type of aircraft to be flown by the pilot, the method of determining compliance with Weight and Balance (W&B) limitations for takeoff, landing, and en route operations.

4) Navigation and use of air navigation aids appropriate to the operation or pilot authorization, including, when applicable, instrument approach facilities and procedures.

5) Air traffic control (ATC) procedures, including IFR procedures when applicable.

6) Meteorology in general, including the principles of frontal systems, icing, fog, thunderstorms, and wind shear, and, if appropriate for the operation of the air carrier/operator, high altitude weather.

7) Procedures for:

- Recognizing and avoiding severe weather situations;
- Escaping from severe weather situations, in case of inadvertent encounters, including low-altitude wind shear (except that rotorcraft pilots are not required to be tested on escaping from low-altitude wind shear); and
- Operating in or near thunderstorms (including best penetrating altitudes), turbulent air (including clear air turbulence), icing, hail, and other potentially hazardous meteorological conditions.

8) New equipment, procedures, or techniques, as appropriate.

9) For rotorcraft pilots, procedures for aircraft handling in flat-light, whiteout, and brownout conditions, including methods for recognizing and avoiding those conditions.

B. Section 135.293(b) Requirements. All pilots who are qualifying in an aircraft type are required by § 135.293(b) to satisfactorily complete a competency check in that type of aircraft before entering revenue service and annually thereafter.

1) For the purposes of the flight competency check required by § 135.293(b), type, as to an airplane, means any one of a group of airplanes determined by the FAA to have a similar means of propulsion, the same manufacturer, and no significantly different handling or flight characteristics. (See Volume 3, Chapter 19, Section 1, paragraph 3-1073, Aircraft Families, for lists of the specific makes and models in each aircraft family that the FAA has determined belong to the same group.)

2) Except as specified below, § 135.293(b) does not specify the maneuvers (events) that must be accomplished on a competency check. The rule authorizes the Administrator or check pilot to make this determination. To ensure standardization and an adequate level of

UNCONTROLLED COPY WHEN DOWNLOADED
Check with FSIMS to verify current version before using

safety, the minimum acceptable content of competency checks for a part 135 curriculum is established by this paragraph and is listed in Tables 3-70 and 3-71.

a) Section 135.293(c) requires each rotorcraft competency check to include a demonstration of the pilot's ability to maneuver the rotorcraft solely by reference to instruments. The check must determine the pilot's ability to safely maneuver the rotorcraft into visual meteorological conditions (VMC) following an encounter with inadvertent instrument meteorological conditions (IIMC). For competency checks in non-IFR-certified rotorcraft, the pilot must perform such maneuvers as are appropriate to the rotorcraft's installed equipment, the certificate holder's operations specifications, and the operating environment. See Table 3-71 for more information.

NOTE: If a part 135 helicopter air carrier/operator's OpSpec A003 only authorizes day VFR operations for a specific make and model (M/M) helicopter that is not equipped with attitude reference instrumentation, the requirement for recovery from IIMC may not be applicable. However, if an air carrier/operator operates multiple variations of the same M/M helicopter–some with attitude reference instrumentation and some without attitude reference instrumentation–pilots must be checked in the variation in which they will serve. For example, if a pilot will only serve in the variation without attitude reference instrumentation, the requirement for recovery from IIMC is not applicable. However, if a pilot will serve in both variations, then the requirement for recovery from IIMC must be completed in the variation with attitude reference instrumentation.

b) Section 135.293(i) requires each competency check to include tasks appropriate to the EFVS operations the part 135 air carrier/operator holder is authorized to conduct. Therefore, the competency check must include EFVS operations to touchdown and rollout if the air carrier/operator is authorized to conduct operations under § 91.176(a) in the aircraft type. The competency check must include EFVS operations to 100 feet above the touchdown zone elevation (TDZE) if the air carrier/operator is authorized to conduct operations under § 91.176(b) in the aircraft type.

3) Because operators may be authorized to conduct VFR-only operations or a combination of VFR and IFR operations, separate requirements have been established for VFR-only competency checks and for combined VFR and IFR operations competency checks. These requirements are indicated in columns marked "VFR COMP" and "IFR COMP" in each table.

a) As a matter of national safety policy, some demonstration of competency of the pilot's ability to maneuver the aircraft solely by reference to instruments will be included on each airplane competency check. For VFR competency checks, this demonstration will be appropriate to the aircraft's installed equipment and the operating environment. (See note 4 to Table 3-70.)

b) In accordance with § 135.293(b), competency checks must be completed in each type of aircraft, which for helicopters means each basic M/M. Therefore, night vision

UNCONTROLLED COPY WHEN DOWNLOADED
Check with FSIMS to verify current version before using

enhancement device (NVED)/Night Vision Goggle (NVG) competency must be evaluated in each basic M/M of helicopter in which a pilot will serve and use NVG. Specific NVG models may only be used in accordance with aircraft Supplemental Type Certificates (STC). Competency checks are not NVG model-specific. Therefore, a satisfactory demonstration of the use of one model of NVGs is all that is required, regardless of the number of models of NVGs the operator uses; it may be used in several different types of appropriately NVG-modified aircraft. Once an initial § 135.293 check and NVG competency has been completed in the basic M/M of helicopter, a flightcrew member is only required to demonstrate annual NVED/NVG competency in one M/M of helicopter. However, it is recommended that the NVED/NVG recurrent competency be alternated between helicopter M/Ms to ensure an adequate level of competency in each M/M.

C. Section 135.297 Requirements. Section 135.297 requires that PICs complete an instrument proficiency check (IPC) prior to conducting IFR revenue operations. Thereafter, the PIC must have completed an IPC within the preceding 6 months to continue IFR revenue operations. The requirements of § 135.297 are not aircraft-specific; that is, a single check fulfilling the requirements of § 135.297 is sufficient to qualify a PIC to conduct IFR operations in all types of aircraft in which the PIC is qualified according to § 135.293. Section 135.293(c) specifies that the check conducted to satisfy § 135.297 simultaneously satisfies the requirements of § 135.293 for the type of aircraft in which the check is accomplished.

NOTE: The oral or written test requirements of § 135.293(a) must be completed.

1) Operations Requiring an ATP Certificate. Section 135.297(c)(1) requires that for operations requiring an ATP Certificate, the IPC must consist of the maneuvers required for original issuance of that certificate and any applicable type rating.

2) Operations Requiring Commercial Certificates. Section 135.297(c)(1) also requires that for operations requiring a commercial certificate and an instrument rating, the IPC must consist of the maneuvers required for the original issuance of a commercial certificate, an instrument rating, and any applicable type rating.

D. Basic Checking Modules for § 135.293 VFR Competency Check.

1) The minimum events for a § 135.293 VFR competency check are listed in the columns marked “VFR COMP” in Table 3-70 for airplanes and in Table 3-71 for helicopters.

2) The minimum events for a § 135.293 VFR competency check utilizing NVG are listed in the columns marked “NVG COMP” in Table 3-70 for airplanes and in Table 3-71 for helicopters.

E. Basic Checking Modules for § 135.293 IFR Competency Check. The minimum events for a § 135.293 IFR competency check are listed in the column marked “IFR COMP” in Table 3-70 for airplanes and in Table 3-71 for helicopters.

1) PIC Requirements. PICs being trained in initial equipment and transition curriculum for IFR operations have normally completed the requirements of § 135.297 within the preceding 6 months. If this is the case, the qualification module for these categories of training

UNCONTROLLED COPY WHEN DOWNLOADED
Check with FSIMS to verify current version before using

need only satisfy the requirements of § 135.293. The columns marked "IFR COMP" in Tables 3-70 and 3-71 reflect this assumption. When this assumption is not true, the operator must ensure that PICs meet the requirements of § 135.297.

2) Multiengine General Purpose Family. Volume 3, Chapter 19, Section 1, subparagraph 3-1073C, Multiengine General Purpose Airplane Family, lists airplanes of the multiengine general purpose family that the Administrator has determined to belong to the same group for purposes of the § 135.293(b) competency check. Table 3-70 is constructed on the assumption that pilots in the transition category are qualifying in airplanes that are not of the same group. The basic qualification module of a transition training course for airplanes of the same group consists of the oral or written test required by § 135.293(a)(2) and (a)(3).

3) Single-Engine General Purpose Family. All single-engine general purpose airplanes are considered to be a single type for the purpose of the § 135.293(b) competency check. The qualification module of the transition category of training for single-engine general purpose airplanes is the written or oral test required by § 135.293(a)(2) and (a)(3).

F. Requalification Category. The minimum events of the requalification checking module are dependent upon whether the pilot is requalifying for VFR or IFR operations and the duty position. PICs who conduct IFR operations and have completed a § 135.297 check in the past 6 months but are overdue for a check required by § 135.293 may regain qualification by completing the items listed in the columns marked "IFR COMP" in Table 3-70 for airplanes and Table 3-71 for helicopters. PICs overdue in respect to the requirements of § 135.297 must complete the items listed in the columns marked "INST PROF" in Table 3-70 for airplanes and Table 3-71 for helicopters.

G. Recurrent Category. The minimum events of the "recurrent" checking module are dependent upon whether the pilot is maintaining currency for VFR or IFR operations and the duty position. PICs who conduct IFR operations and have completed a § 135.297 check in the past 6 months must complete a § 135.293 competency check to remain current. Complete those items listed in the columns marked "IFR COMP" in Table 3-70 for airplanes and Table 3-71 for helicopters. PICs due both a competency check and an IPC must complete the items listed in the columns marked "INST PROF" in Table 3-70 for airplanes and Table 3-71 for helicopters. Section 135.297 requires PICs to complete IPCs by rotating aircraft types. When one airplane is multiengine and the other a single-engine airplane, § 135.297(f) requires that this rotation begin with the multiengine airplane.

NOTE: Section 135.301 allows pilots and operators to consider a check conducted in the month before it is due or the month after it is due to have been accomplished in the month due.

H. SIC Qualification in Aircraft Not Requiring an SIC. The basic qualification module for an SIC in any operation (VFR or IFR) for which no SIC is required by regulation is either an instrument proficiency or VFR competency check in any aircraft of the same category and class and the written or oral test required by § 135.293(a)(2) for the type of aircraft involved.

UNCONTROLLED COPY WHEN DOWNLOADED
Check with FSIMS to verify current version before using

I. Listing Module Events. To ensure that the content of the basic checking module is adequate and appropriate, the operator may choose (or the POI may require) that the minimum required events of each basic checking module be listed on the curriculum outline.

J. Recording Checks. Record the checks for those operators whose flightcrew members get all their checks from FAA inspectors (single pilot, single PIC, and basic operators) on FAA Form 8410-3, Airman Competency/Proficiency Check, or equivalent form. POIs should encourage all other operators to create specifically tailored forms to record these checks which reflect the requirements listed in the operator's curriculum outline. When multiple events, such as VFR and NVG, are demonstrated during the same flight, separate indications should be annotated on the checking form for the completion of an event and the conditions under which it was completed.

Table 3-70. Part 135 Checking Modules—Airplanes

EVENTS	VFR COMP.	IFR COMP.	INST. PROF.	NVG TASKS	NOTES
WRITTEN OR ORAL TEST					
14 CFR part 135, § 135.297			P		
§ 135.293	B	B		B	
GROUND OPERATIONS					
Preflight inspection	B[c]	B	P	B	1
Start procedures	B[c]	B	P	B	1
Taxiing/runway operations	B[c]	B	P	B	1
Pretakeoff checks	B[c]	B	P	B	1
TAKEOFF AND DEPARTURES					
Normal	B[c]	B	P	B[d]	
Crosswind	B[c]	B	P	B[d]	2
Instrument		P	P		2
With powerplant failure	B	B	P	B[d]	ME Only
Rejected takeoff	P[c]	P	P	B[d]	2, ME Only
Short field	P	P	P[b]	B[d]	SE Only
Area departure			P[a]		
IN-FLIGHT MANEUVERS					
Steep turns	P[b]	P[b]	P[b]	B	
Stall prevention (approaches to stalls)	B[c]	P	P	B	2
Powerplant failure	P	P	P	B	

UNCONTROLLED COPY WHEN DOWNLOADED
Check with FSIMS to verify current version before using

EVENTS	VFR COMP.	IFR COMP.	INST. PROF.	NVG TASKS	NOTES
Two-engine-inoperative approach	P[c]	P	P		3 and 4 Engine Airplanes
INSTRUMENT PROCEDURES					
Area arrival			P[a]		
Holding			P[b]		
Normal ILS approach		B	P		3, 2
Engine-out ILS		P	P		2, ME Only
Coupled approach		P	P		3, 2
Nonprecision approach		B	P		6
Second nonprecision approach			P		6
Missed approach from an ILS			P		
Second missed approach			P		
Circling approach			P		7
EFVS approach		B			8
LANDINGS AND APPROACHES TO LANDINGS					
Normal	B[c]	B	P	B[d]	2
Crosswind	B[c]	B	P	B[d]	2
Landing from an ILS			P		
Landing with engine out	B	B	P	B[d]	ME Only
Circling approach			P		7
Rejected landing			P	B	
Two-engine-inoperative landing	P[c]	P	P	B[d]	3 and 4 Engine Airplanes
Short Field landing	P	P	P	B[d]	SE Only
No-flap approach	P[c]	P	P	B	2, 9
EFVS landing		B			8
SEA & SKI OPERATIONS (if applicable)					
Normal takeoff & landing	B	B	P		
Steep turns	P[b]	P[b]	P[b]		

UNCONTROLLED COPY WHEN DOWNLOADED
Check with FSIMS to verify current version before using

EVENTS	VFR COMP.	IFR COMP.	INST. PROF.	NVG TASKS	NOTES
Glassy & rough water	P[b]	P[b]	P[b]		
Sailing	P[b]	P[b]	P[b]		
Docking	P[b]	P[b]	P[b]		
NON-NORMAL AND EMERGENCY PROCEDURES					
System malfunction	B[c]	B	P	B	1
NVG malfunction				B	
Maneuver by partial panel	B	B	P		5
Unusual attitude recovery	B	B	P	B	
Emergency landing	B	B	P	B	SE Only
Use of external lighting				B	
Instrument approach	B				4

NOTES TO TABLE 3-70, PART 135 CHECKING MODULES—AIRPLANES

P Pilot in command (PIC).
B Both the PIC and second in command (SIC).
M Multiengine
E
SE Single-engine
(a) May be waived at the discretion of the principal operations inspector (POI) and the check pilot when the check is not simultaneously conducted for certification. (See Volume 5, Chapter 3, Section 2.)
(b) May be waived at the discretion of the POI and the check pilot when the check is not conducted in conjunction with initial new-hire or initial equipment training.
(c) Accomplishment Unaided may be combined at the discretion of the POI or the check pilot when conducting a Night Vision Goggle (NVG) competency concurrent with a VFR competency check.
(d) Only required if operator authorized takeoff and landing Airplane Night Vision Goggle (ANVG) operations on Operations Specification (OpSpec) A051.
1 Both PIC and SIC may be evaluated performing their assigned duties in these events simultaneously when the check pilot is not seated at the controls.
2 See Volume 5, Chapter 3, Section 2.
3 The applicant must demonstrate the ability to use all installed equipment including autopilots and flight directors (FD). In multiengine airplanes, an engine-out instrument landing system (ILS) may be substituted for the normal ILS at the option of the inspector or check pilot administering the check.
4 POIs must ensure applicants accomplish this event in an aircraft the operator uses in revenue operations (or in an appropriately equipped flight simulation training device

UNCONTROLLED COPY WHEN DOWNLOADED
Check with FSIMS to verify current version before using

(FSTD)). The event should reflect a realistic course of action the pilot might take to escape from an encounter with inadvertent instrument meteorological conditions (IIMC). POIs should approve methods appropriate to the aircraft, equipment, and facilities available. When the pilot is authorized to operate an appropriately equipped aircraft and the check is conducted at a location where an ILS is operational, demonstrate an ILS approach. POIs may also approve a letdown on partial panel when this would be an appropriate course of action.

5 Airplanes not having standby instrumentation.

6 See Volume 5, Chapter 3, Section 2. Any two nonprecision approaches authorized by the OpSpecs may be accomplished at the discretion of the inspector or check pilot conducting the check.

7 A pilot need not be evaluated in circling approaches when the operator's procedures restrict that pilot (PIC or SIC) from conducting this event in revenue service.

8 If the certificate holder is authorized to conduct enhanced flight vision system (EFVS) operations to touchdown and rollout, at least one instrument approach to a landing must be made using an EFVS, including the use of enhanced flight vision from 100 feet above the TDZE to touchdown and rollout. If the certificate holder is authorized to conduct EFVS operations to 100 feet above the TDZE, at least one instrument approach to a landing must be made using an EFVS, including the transition from enhanced flight vision to natural vision at 100 feet above the TDZE.

9 Required only for transport, commuter, turboprop, and Special Federal Aviation Regulations (SFAR) aircraft families as described in Volume 3, Chapter 19, Section 1.

Table 3-71. Part 135 Checking Modules—Helicopters

EVENTS	VFR COMP.	IFR COMP.	INST. PROF.	NVG TASKS	NOTES
WRITTEN OR ORAL TEST					
14 CFR part 135, § 135.297			P		
§ 135.293	B	B		B	
GROUND OPERATIONS					
Preflight inspection	B	B	P	B	1
Start procedures	B	B	P	B	1
Taxiing and ground hover	B	B	P	B	1
Pretakeoff checks	B	B	P	B	1
TAKEOFF AND DEPARTURES					
Normal	B	B	P	B	
Instrument		P	P		
With powerplant failure	B	B	P	B	ME Only
Rapid deceleration	P	P	P	B	2
Area departure			P[(a)]		
IN-FLIGHT MANEUVERS					

UNCONTROLLED COPY WHEN DOWNLOADED
Check with FSIMS to verify current version before using

EVENTS	VFR COMP.	IFR COMP.	INST. PROF.	NVG TASKS	NOTES
Steep turns			P[a]		
Settling with power	B	B	P	B[c]	
Unusual attitude recovery	B	B	P	B	4
INSTRUMENT PROCEDURES					
Area arrival			P[a]		
Holding			P[a]		
Normal ILS approach		B	P		2, 3
Engine-out ILS		P	P		ME Only
Coupled approach		P	P		2, 3
Nonprecision approach		B	P		2
Second nonprecision approach			P		2
Missed approach from an ILS			P		
Second missed approach			P		
Circling approach			P		5
LANDINGS AND APPROACHES TO LANDINGS					
Normal	B	B	P	B	2
Landing from an ILS			P		
Landing with engine out	B	B	P	B	ME Only
Circling approach			P		5
SEA & SKI OPERATIONS (if applicable)					
Normal takeoff & landing	B	B	P	B	
NON-NORMAL AND EMERGENCY PROCEDURES					
System malfunction	B	B	P	B[b]	1
Recovery from IIMC	B	B	B	B	4
Maneuver by partial panel	B	B	P		7
Instrument approach	B	B	P		4
Power failure and autorotation to a power recovery	B	B	P	B	SE Only 2
Hovering autorotations	B	B	P	B	SE Only, 6
Tail rotor failure	B	B	P		Oral Only
Dynamic rollover	B	B	P		Oral Only
Low rotor rpm	B	B	P		Oral Only
Anti-torque system failure	B	B	P		Oral Only

UNCONTROLLED COPY WHEN DOWNLOADED
Check with FSIMS to verify current version before using

EVENTS	VFR COMP.	IFR COMP.	INST. PROF.	NVG TASKS	NOTES
Confined area/pinnacle operations	P		P	B	
Slope operations	P		P	B	
Ground hazard recognition				B	
Brownout/whiteout/flat light operations				B	
Use of external lighting				B	

NOTES TO TABLE 3-71, PART 135 CHECKING MODULES—HELICOPTERS

(a) May be waived at the discretion of the principal operations inspector (POI) and the check pilot when the check is not conducted in conjunction with initial new-hire or initial equipment training.

(b) This will include a simulated Night Vision Goggle (NVG) failure with appropriate recovery procedures.

(c) This maneuver may be waived at the discretion of the POI or check pilot. Initial night vision enhancement device (NVED)/NVG training does not require this maneuver to be demonstrated or performed.

1 Both the pilot in command (PIC) and second in command (SIC) may be evaluated performing their assigned duties in these events simultaneously when the check pilot is not seated at the controls.

2 See Volume 5, Chapter 3, Section 5.

3 The applicant must demonstrate the ability to use all installed equipment including autopilots and flight directors (FD). In multiengine helicopters, an engine-out instrument landing system (ILS) may be substituted for the normal ILS at the option of the inspector or check pilot administering the check.

4 The event should reflect a realistic course of action the pilot might take to escape from an encounter with inadvertent instrument meteorological conditions (IIMC). Recovery from IIMC is an emergency maneuver since the pilot would be operating under VFR prior to the IIMC. POIs should approve methods appropriate to the aircraft, equipment installed, facilities available, operations specifications (OpSpecs) requirements, and the environment in which the operations may occur. Checking must provide emphasis on avoidance of IIMC, including the discipline and decisionmaking required to divert, make a precautionary landing, or make an emergency transition to instrument flight rules (IFR), as appropriate to the circumstances. This event must include attitude instrument flying, recovery from unusual attitudes, navigation, air traffic control (ATC) communications, and, at least one instrument (if aircraft is so equipped) approach appropriate to circumstances. For pilots who are authorized to conduct part 135 helicopter operations under IFR, aviation safety inspectors (ASI) and check pilots should use the same standards that the air carrier/operator uses to evaluate other instrument maneuvers and procedures. For pilots not authorized to conduct part 135 helicopter operations under IFR, ASIs and check pilots should use the standards that the air carrier/operator uses to evaluate emergency maneuvers and procedures. If the helicopter is equipped with an operable

UNCONTROLLED COPY WHEN DOWNLOADED
Check with FSIMS to verify current version before using

autopilot and the pilot is trained in its use, the autopilot may be used in the accomplishment of this task.

5 A pilot need not be evaluated in circling approaches when the operator's procedures restrict that pilot (PIC or SIC) from conducting this event in revenue service.

6 When the check is being conducted in a helicopter that requires the check pilot to divert his or her attention from the flight controls (such as visually confirming the location of the throttle, fuel-flow control lever, etc.) at night, this maneuver should be conducted under night-unaided conditions in lieu of being conducted under NVGs.

7 Helicopters not having standby instrumentation.

3-1281 CREDIT FOR CERTIFICATION FLIGHT CHECKS.

A. ATP Certificate Flight Test. In accordance with § 61.157(f)(1)(i) and (f)(2), successful completion of a proficiency check under § 121.441 conducted by an aircrew program designee (APD) or Training Center Evaluator (TCE) satisfies the flight test requirements for the issuance of an ATP Certificate or aircraft rating. Additionally, in accordance with § 61.157(f)(1)(ii), successful completion of the testing requirements of § 135.293(a)(2), the competency check requirements of § 135.293(b), and the PIC IPC requirements of § 135.297, all conducted by an APD or TCE, satisfies the flight test requirements for the issuance of an ATP Certificate or aircraft rating.

B. FE Certificate. The certification flight test for an FE Certificate or class rating simultaneously satisfies the part 121 flight check requirement.

3-1282 CONDUCT OF PROFICIENCY, COMPETENCY, AND FLIGHT CHECKS.

Specific direction and guidance for the conduct of certification flight tests is in Volume 5, Chapters 1, 3, and 4. The same standards, direction, and guidance are applicable to inspectors, check pilots, and check FEs when conducting proficiency checks, VFR competency checks, IFR competency checks, and FE flight checks. POIs must evaluate the operator's check pilot and check FE program to ensure that check pilots and check FEs are applying the same standards and are adhering to the direction and guidance for proficiency, competency, and flight checks that are applicable to certification flight checks.

A. Waiving of Events. Inspectors and check pilots may waive those events indicated by an asterisk in Figure 3-80, Table 3-70, and Table 3-71. This provision applies to all checks conducted under part 121 and those part 135 checks which do not involve certification. The waiver provisions of part 61 apply only to pilots employed by part 121 operators (refer to § 61.157(j)).

1) The use of waiver authority is not automatic. Check pilots are cautioned to exercise judgment in the use of this authority. When an applicant demonstrates a high level of performance, check pilots should make liberal use of the waiver authority. When an applicant's performance only approaches the minimum acceptable standards, however, none of the events of the flight test should be waived.

2) Inspectors and check pilots are cautioned that some waiver provisions apply to portions of an event rather than to a whole event (e.g., the stall prevention series). Other events

UNCONTROLLED COPY WHEN DOWNLOADED
Check with FSIMS to verify current version before using

have specific conditions which must be fully met before waiver authority may be exercised (e.g., the second nonprecision approach). See the discussion of the conditions and limitations of waiver authority and the guidance on acceptable means and standards for conducting specific checking events in Volume 5, Chapter 3, Section 2.

3) Part 121 appendix F contains certain restrictions on waiving events. For example, when a circling approach is required but cannot be accomplished due to traffic or other reasons, it may be waived. Circling approaches, however, may not be waived for two successive checks. POIs will observe these same provisions for part 135 operators under the Administrator's authority to determine the content of part 135 checks.

B. Training to Proficiency. When a check pilot determines that an event is unsatisfactory, the check pilot may conduct training and repeat the testing of that event. This provision is made in the interest of fairness and to avoid undue hardship and expense for pilots and operators. Training may not be conducted, however, without recording the failure of these events. The quality control (QC) of a training program is accomplished, among other means, by identifying those events on checks which flightcrew members fail. POIs must ensure the following guidance is supplied to operators and check pilots concerning the practice of training to proficiency:

1) Training and checking cannot be conducted simultaneously. When training is required, the check must be temporarily suspended, training conducted, and then the check resumed.

2) When training to proficiency is required, the check pilot must record the events which were initially failed and in which training was given.

3) When training to proficiency is conducted and the check is subsequently completed within the original session, the overall grade for the check may be recorded as satisfactory. When the training required to reach proficiency cannot be completed in the original checking session, the check must be recorded as unsatisfactory and the pilot entered into requalification training.

4) When training to proficiency is required and it is practical to do so, the remaining events of the flight test phase should be completed before training in the failed event is conducted. If it is more practical, the failed event may be repeated at the end of a logical sequence. For example, training on stall prevention might be conducted at altitude after all other air work has been completed, but before returning to the traffic pattern.

5) If, after having received training, the pilot fails an event again, the failure must be recorded, and the pilot must be entered into requalification training.

NOTE: If for mechanical or other reasons the check cannot be completed after the failure of an event and before training and retesting can be accomplished, the check is considered terminated; however, the pilot may not serve in revenue operations until the check is successfully completed.

UNCONTROLLED COPY WHEN DOWNLOADED
Check with FSIMS to verify current version before using

3-1283 USE OF FSTDs FOR PROFICIENCY, FLIGHT, AND COMPETENCY CHECKS. The guidance of this paragraph applies to the use of FSTDs in conducting either part 121 proficiency checks, part 121 flight checks, or part 135 competency checks and IPCs. The level of FSTD that can be used for any particular flight event in these checks depends on the flightcrew member's duty position and on the category of training. The maneuvers and procedures tables along with the introductory information in Volume 3, Chapter 19, Section 6, paragraphs 3-1244 through 3-1252, specify the minimum level of FSTD that can be used for a particular training event. This minimum level is also the level that can be used to test the event during a proficiency, flight, or competency check. Before beginning a proficiency, flight, or competency check, inspectors, check pilots, and check FEs must determine which flight events can be conducted in the FSTD to be used.

3-1284 THE OE QUALIFICATION MODULE. PICs and SICs in part 121 operations completing an initial new-hire, initial equipment, transition, or upgrade category of training, must satisfactorily complete OE. FEs completing an initial new-hire, initial equipment, or transition category of training must satisfactorily complete OE. Part 135 specifies that before a pilot may be assigned as a PIC in a commuter passenger carrying operation, that pilot must complete OE in each make and basic model of aircraft in which the pilot is to serve as a PIC. The qualification curriculum segment outline that is applicable to these flightcrew member duty positions must list the appropriate requirements for each duty position. Both parts 121 and 135 specify the minimum flight hour requirements for these duty positions. Part 121 also specifies minimum operating cycles for pilots. An operator may elect to specify a greater flight hour requirement than the regulatory minimum. Unless AFS-200 has authorized a deviation in accordance with § 121.434(a)(4), inspectors must not approve any qualification curriculum segment that lists a flight hour requirement that is less than that specified by the appropriate regulation. (See Volume 3, Chapter 19, Section 12 for additional information regarding deviations based on designation of related aircraft.)

A. Part 121 Minimum OE Flight Hours and Operating Cycles.

1) PIC or SIC Initial New-Hire, PIC or SIC Initial Equipment, or PIC Transition with FFS Training. In accordance with § 121.434(c)(3)(i), pilots who are completing an initial new-hire curriculum or initial equipment curriculum, and in accordance with § 121.434(c)(3)(iii), pilots who are completing a PIC transition curriculum (which includes training in an FFS under § 121.409), must satisfactorily complete the following minimum operating cycles and OE flight hours:

- Group I reciprocating—15 hours and 4 operating cycles with at least 2 as the Pilot Flying (PF).
- Group I turbopropeller—20 hours and 4 operating cycles with at least 2 as the PF.
- Group II turbojet—25 hours and 4 operating cycles with at least 2 as the PF.

2) SIC Transition or PIC Transition Without FFS Training. In accordance with § 121.434(c)(3)(ii), SICs who are completing a transition curriculum and PICs who are completing a transition curriculum which does not include an approved course of training in an FFS must satisfactorily complete the following minimum operating cycles and OE flight hours:

UNCONTROLLED COPY WHEN DOWNLOADED
Check with FSIMS to verify current version before using

- Group I reciprocating—10 hours and 4 operating cycles with at least 2 as the PF.
- Group I turbopropeller—12 hours and 4 operating cycles with at least 2 as the PF.
- Group II turbojet PIC—25 hours and 4 operating cycles with at least 2 as the PF.
- Group II turbojet SIC—15 hours and 4 operating cycles with at least 2 as the PF.

3) SIC or PIC Upgrade. Although § 121.434 requires satisfactory completion of OE for pilots who are completing an upgrade curriculum, the minimum flight hours are not specified. The following minimum flight hours are recommended, however, for an SIC upgrading to PIC, and for an FE upgrading to SIC, regardless of whether or not the upgrade curriculum includes training in an FFS:

- Group I reciprocating—SIC to PIC, 8 hours; FE to SIC, 15 hours.
- Group I turbopropeller—SIC to PIC, 8 hours; FE to SIC, 15 hours.
- Group II turbojet—SIC to PIC, 10 hours; FE to SIC, 25 hours.

4) FE Initial New-Hire, FE Initial Equipment, or FE Transition. In accordance with § 121.434(d), FEs who are completing initial new-hire, initial equipment, or transition curricula must satisfactorily complete the following minimum OE flight hours:

- Group I reciprocating—8 hours.
- Group I turbopropeller—10 hours.
- Group II turbojet—12 hours.

NOTE: In order for a PIC or SIC to acquire the required OE hours, that PIC or SIC "must *perform the duties*" of a PIC or SIC, respectively, under the supervision of a check pilot (refer to § 121.434(c)(1)(i) and (c)(2)). Additionally, § 121.434(d) also requires that FEs "must *perform the duties*" of a FE under the supervision of a check FE, check pilot, or qualified FE to acquire OE hours. Therefore, time spent by a pilot or FE while not seated at the controls or FE station, as applicable, including time spent resting, as required by 14 CFR part 117 and part 121 subparts Q, R, and S, cannot be counted to satisfy the OE requirements of § 121.434 (refer to Legal Interpretation to Hugh Thomas, June 10, 2013).

B. Reductions to Part 121 OE Flight Hours. In accordance with § 121.434(f), for flightcrew members completing the following curricula, the minimum OE flight hours may be reduced up to 50 percent by substituting one additional takeoff and landing for 1 hour of flight:

- All Group I PIC, SIC, and FE curricula.
- Group II PIC or FE transition.

UNCONTROLLED COPY WHEN DOWNLOADED
Check with FSIMS to verify current version before using

NOTE: Reduction to OE flight hours is not permitted for flightcrew members who are completing: Group II PIC, SIC, or FE initial new-hire; Group II PIC, SIC, or FE initial equipment; or Group II SIC transition.

C. Part 135 Minimum Flight Hours.

1) The part 135 flight hour requirement applies only to pilots who will be assigned to serve as PIC in a commuter passenger carrying operation. In addition, the minimum OE must be acquired for each make and basic model of aircraft in which the pilot is to serve as PIC. Section 135.244 specifies that the type and number of engines powering the aircraft determines the minimum flight hours for commuter PICs, which are as follows:

- Single-engine airplanes and helicopters—10 hours.
- Multiengine, reciprocating-powered airplanes and helicopters—15 hours.
- Multiengine, turbine-powered airplanes and helicopters—20 hours.
- Turbojet-powered airplanes—25 hours.

2) Part 135 does not require that SICs who are to serve in commuter operations acquire OE. POIs should, however, encourage part 135 commuter operators to include an OE module in their qualification curriculum segments for SICs. For example, the SIC qualification module could require the pairing of a newly trained SIC with only a highly experienced PIC for a specified number of hours or until an experienced PIC has certified that the SIC is proficient in assigned duties.

D. Reductions to Part 135 OE Flight Hours. In accordance with § 135.244(b)(4), the minimum OE flight hours may be reduced up to 50 percent by substituting one additional takeoff and landing for 1 hour of flight.

E. Conduct of OE. All flightcrew members must have successfully completed the applicable proficiency, competency, and flight checks before starting OE, and are therefore considered to be qualified to serve in revenue operations, under the appropriate supervision. Flightcrew members must acquire OE while conducting revenue operations, except when the operator has not previously used the aircraft. In this case, the flight hours acquired while conducting proving flights or ferry flights may be credited towards the OE requirement.

1) A pilot in the process of acquiring OE as a PIC under the provisions of parts 121 and 135 must occupy the appropriate pilot position and perform PIC duties under the supervision of a check pilot. The check pilot must also occupy a pilot position. In the case of a PIC trained under a part 121 transition curriculum, however, the check pilot may occupy the observer's seat after the qualifying PIC has made at least two takeoffs and landings and the check pilot is satisfied that the pilot candidate is competent to perform the duties of a PIC.

a) During the time that a qualifying PIC is acquiring OE, the supervising check pilot should give instruction as needed and help to refine the pilot's proficiency as a PIC. The check pilot must determine when the PIC is fully proficient and ready to be administered an initial line check. If the qualifying PIC is not ready for an initial line check after the minimum flight hours have been completed, the supervision must be continued until the PIC is proficient.

UNCONTROLLED COPY WHEN DOWNLOADED
Check with FSIMS to verify current version before using

b) The check pilot should not recommend an initial line check until the check pilot is satisfied that the qualifying PIC is proficient. If the check pilot recommends the PIC for an initial line check before the minimum flight hours are acquired, the time spent conducting the line check may be credited toward the required flight hours. In all cases, however, the qualifying PIC must satisfactorily complete the minimum flight hours and operating cycles (part 121 only) under the supervision of a check pilot before the PIC can be released to operate unsupervised in revenue flights.

2) A pilot in the process of acquiring OE as an SIC under the provisions of part 121 must occupy the appropriate pilot position and perform the duties of an SIC under the supervision of a check pilot. The check pilot must also occupy a pilot position. The qualifying SIC must satisfactorily complete the minimum flight hours and operating cycles under the supervision of a check pilot before the SIC can be released to operate unsupervised in revenue operations.

3) An FE in the process of acquiring OE must perform the duties of an FE at the FE station under the supervision of a check pilot, check FE, or a qualified FE. In either case, the qualifying FE must satisfactorily complete the minimum flight hours before being assigned as the required FE in revenue operations. When an operator schedules FEs to complete OE under the supervision of a qualified FE who has not been trained as a check FE, the POI should consider special en route surveillance of those FEs after they are assigned as required FEs in revenue operations. The purpose of this special surveillance is to determine whether the operator's training, flight-testing, and OE programs sufficiently prepare the FEs for line operations.

F. OE Qualification Guides. POIs should encourage operators to develop an OE qualification guide to be used by supervisors, check pilots, and check FEs. The purpose of the qualification guide is to ensure that a flightcrew member systematically gains experience in all required duties the flightcrew member will later be required to perform without supervision. Some of the typical experience events that might be incorporated in a qualification guide are as follows:

- Terminal security procedures;
- Aircraft security and anti-hijacking procedures;
- Weather forecasts and information sources;
- Flight planning;
- Dispatch procedures;
- Cockpit setup, initialization of computers, entering present position and waypoints, confirming navigation setup;
- Weight and Balance (W&B) computation (including last minute changes);
- ATC flow control procedures;
- MEL and CDL procedures;
- Pushback and powerback procedures and limitations;
- Procedures for fueling and confirming fuel loads;
- Familiarity with major terminal areas;
- Terminal and en route communications;

UNCONTROLLED COPY WHEN DOWNLOADED
Check with FSIMS to verify current version before using

- Flight progress and fuel monitoring procedures;
- In-flight weather watch; and
- Diversion procedures.

3-1285 THE LINE CHECK QUALIFICATION MODULE. Both parts 121 and 135 specify that before a pilot can serve as an unsupervised PIC in revenue operations that pilot must have satisfactorily completed a line check. Except for requalification training, the qualification curriculum segment for PICs should include a line check module as a requirement for all other categories of training. Requalification training curricula that are used to requalify PICs who have been unqualified for 12 months or more should include a required PIC line check module. Both parts 121 and 135 specify that all PICs must satisfactorily complete a line check once every 12 calendar-months in at least one of the aircraft types in which the PIC is to serve. Therefore, the qualification curriculum segment for recurrent training should include a line check module for the PIC.

A. General Direction and Guidance. Part 121 specifies that the line check is to be given by a check pilot who is properly qualified in the particular airplane being used. In certain unique situations, such as when an operator is qualifying an initial cadre of check pilots, the only practical way of completing the line check requirement may be for an FAA inspector to conduct the line check and to certify the PIC's performance. Part 135 specifies that an approved check pilot or an FAA inspector may give the line check. For both parts 121 and 135, the amount of time flown during a line check may be credited to the OE flight hour requirement. The line check, however, should not be conducted until the OE flight hour requirement has been substantially completed. When a PIC serves in both parts 121 and 135 operations, a line check conducted in a part 121 aircraft satisfies the part 135 line check requirement. POIs should encourage operators to place emphasis on their line check programs. A well-run line check program can provide detection of deficiencies and adverse trends and establish the need for a revision of old procedures or an initiation of new procedures. POIs should encourage operators to design and use line check forms to facilitate the collection of such information.

B. Part 121 Line Checks. For part 121 operations, the line check must be conducted over at least one typical route in which the PIC may be assigned. If the typical route the PIC will be flying includes Class II navigation, the line check must be conducted on a route where Class II navigation is used. The line check may be conducted during either revenue or nonrevenue operations.

C. Part 135 Line Checks. For part 135 operations, the line check must consist of at least one route segment over a civil airway, an approved off-airway route, or a portion of either, including takeoffs and landings at one or more airports that are representative of the operator's type of operation. In certain part 135 operations, it may not be practical to conduct a line check during revenue operations. In these cases, the POI may authorize that the line check be conducted during the same flight period that the competency check is conducted. If the line check is conducted in this manner, the line check portion of this flight period must include the requirements previously discussed in this paragraph.

UNCONTROLLED COPY WHEN DOWNLOADED
Check with FSIMS to verify current version before using

3-1286 LINE OPERATING FLIGHT TIME FOR THE CONSOLIDATION OF KNOWLEDGE AND SKILLS (PART 121). In accordance with § 121.434(g) PICs and SICs must complete a minimum of 100 hours of flight time performing the duties of PIC or SIC, respectively, in operations under part 121 in the airplane type within 120 days after completion of a § 121.441 proficiency check completed in an initial new-hire, initial equipment, transition, or upgrade from FE to SIC curriculum. Time spent by a pilot while not seated at the controls, including time spent resting, as required by part 117 and part 121 subparts Q, R, and S, cannot be counted to satisfy the consolidation requirements of § 121.434 (refer to Legal Interpretation to Hugh Thomas, June 10, 2013).

NOTE: In accordance with § 121.434(h)(2), a pilot who has completed the consolidation requirement in the airplane type while serving as an SIC is not required to repeat the consolidation requirements as a PIC on the same airplane type.

A. Serving in Another Airplane Type. In accordance with § 121.434(h)(3), if a pilot serves in another airplane type before completing the required 100 hours of consolidation, the pilot must satisfactorily complete refresher training in the airplane for which the pilot has newly qualified before serving in that airplane type. Refresher training must be conducted by an appropriately qualified instructor or check pilot in accordance with the certificate holder's approved training program.

B. Extension of 120-Day Period. In accordance with § 121.434(h)(4), if the required 100 hours is not completed within 120 days after completion of the proficiency check, the certificate holder may extend the period to 150 days if:

1) The pilot continues to meet all applicable requirements of part 121 subpart O, and

2) On or before the 120th day the pilot satisfactorily completes refresher training conducted by an appropriately qualified instructor or check pilot or a check pilot determines that the pilot has retained an adequate level of proficiency after observing that pilot in a supervised line operating flight.

NOTE: Section 121.434 does not allow any additional extensions. Therefore, if a pilot does not complete the required 100 hours within the 150-day period, the pilot may not serve in part 121 operations until completing another § 121.441 proficiency check. Upon completion of this proficiency check, another 120-day period begins for the pilot to complete the required 100 hours of consolidation. No credit is allowed for hours completed in the first 150-day period prior to the subsequent proficiency check.

C. Deviations for New Certificate Holders, New Airplane Types, and New Domiciles. Section 121.434(h)(5) specifies three conditions under which a part 121 air carrier may request deviation from the consolidation requirement. These three conditions recognize the need for an alternative method of compliance during the initial startup of an air carrier or addition of a new airplane type. These deviations are not intended to be used for scheduling convenience. The three conditions are:

UNCONTROLLED COPY WHEN DOWNLOADED
Check with FSIMS to verify current version before using

- A newly certificated air carrier does not employ any pilots who meet the minimum requirements of § 121.434(g);
- An existing air carrier adds a new airplane type to its fleet not previously proven for use in its operations; or
- An air carrier establishes a new domicile to which it assigns pilots who will be required to become qualified on the airplanes operated from that domicile.

D. Related Aircraft Deviations. In accordance with § 121.434(a)(4), an air carrier may request a deviation from the consolidation requirements based upon a designation of related aircraft. See Volume 3, Chapter 19, Section 12 for additional information and the request process for deviations based on designation of related aircraft.

3-1287 ADDITIONAL CHECKING MODULES. Additional checking modules include flight test events that must be conducted to qualify flightcrew members for special operations, such as CAT II or CAT III instrument approach procedures (IAP) and NVG operations. Another example of an additional checking module is the requirement that a PIC be initially qualified over a route or area requiring a special type of navigation such as inertial navigation system (INS) or long-range navigation. (Refer to § 121.445(d)(2).)

A. Concurrent Checks. Additional checking modules are frequently conducted concurrently with a proficiency check, competency check, or line check.

1) The regulations and advisory circulars (AC) require additional checks, but usually do not specify the content of these checks. Since there are often several acceptable means of conducting these checks, the additional checking module outline must specify the content of these checks.

2) When a part 121 or part 135 operator chooses to conduct an additional checking module in conjunction with a basic checking module, the requirements of both modules must be accomplished. A single event may, however, be credited for both modules simultaneously. For example, an operator who conducts basic checking modules and CAT II additional checking modules at the same time may combine the ILS approach requirements. Similarly, NVG events can be used in some cases to satisfy corresponding VFR competency event requirements. The basic checking module requires a normal ILS; a manually controlled, engine-out ILS; a coupled ILS; a landing from an ILS; and a missed approach from an ILS. The normal ILS and the coupled ILS may be combined in the basic checking module for a minimum of two ILS approaches. In this case, one approach must terminate in a landing and one in a missed approach. For an operator who conducts only coupled CAT II approaches, the CAT II additional checking module requires a minimum of two approaches to CAT II minimums; one approach must be to a landing and one to a missed approach. A POI may approve combining the compatible events of these two modules. In this case, the combined requirement is one-engine-out, manually controlled ILS to CAT I minimums; one coupled, CAT II ILS to a landing, and one coupled, CAT II ILS approach to a missed approach. POIs who have concerns over what combinations are permissible should consult the Air Carrier Training Systems and Voluntary Safety Programs Branch (AFS-280) when necessary.

UNCONTROLLED COPY WHEN DOWNLOADED
Check with FSIMS to verify current version before using

3) Since NVG competency is an additional checking module as part of the § 135.293(b) check when requested, the VFR portion of the check must be completed prior to the NVG check to ensure VFR competency first. The NVG portion must then be accomplished to satisfy this additional qualification. Once a pilot has demonstrated VFR competency, the examiner may subsequently elect to allow demonstration of an event under NVG to satisfy the VFR requirement simultaneously, as indicated in Table 3-70 by note (c). Many factors will determine what events are credited, such as the experience of the pilot, the operating environment, the currency of the pilot, and the examiner's judgment and evaluation of the pilot. The primary consideration is a complete and satisfactory demonstration of the pilot to operate safely both with and without the use of NVG. Those VFR competency events not indicated as eligible for combining must be demonstrated unaided to satisfy the VFR competency check requirements.

B. Additional Checking Modules. Operators may choose to conduct additional checking modules separately from a proficiency check, a competency check, or a line check. It may be more practical to accomplish an additional flight test separately because of high minimum PIC requirements or because of pilot bidding practices for international routes. When an operator conducts separate checking modules, the operator must limit the use of flightcrew members to those operations that do not involve the special operations until the flightcrew members have satisfactorily completed the additional testing.

RESERVED. Paragraphs 3-1288 through 3-1300.

UNCONTROLLED COPY WHEN DOWNLOADED
Check with FSIMS to verify current version before using

VOLUME 3 GENERAL TECHNICAL ADMINISTRATION

CHAPTER 21 THE ADVANCED QUALIFICATION PROGRAM

Section 4 Safety Assurance System: The Advanced Qualification Program Approval Process

3-1566 GENERAL. This section establishes how the Federal Aviation Administration (FAA) will grant or withdraw approval of all or part of an Advanced Qualification Program (AQP). This section is related to Safety Assurance System (SAS) Element 2.1.6 (OP) Advanced Qualification Program.

C. Scope. The approval process applies to qualified Title 14 of the Code of Federal Regulations (14 CFR) parts 121, 135, and 142 certificate holders that apply for an AQP.

D. Extended Review Team (ERT). The review and surveillance of an AQP prior to final approval is equivalent to a recertification of the applicant's training program. To ensure the maintenance of an effective and standardized process, the Air Carrier Training Systems and Voluntary Safety Programs Branch will lead a team to conduct the review and certification of the AQP.

1) The ERT may include (but is not limited to) the following personnel:

- FAA manager (Air Carrier Training Systems and Voluntary Safety Programs Branch).
- Principal operations inspector (POI) (or a designated representative).
- Training Center Program Manager (TCPM) (if applicable).
- Aviation safety inspector (ASI) staff program manager (Air Carrier Training Systems and Voluntary Safety Programs Branch).
- Aircrew program manager (APM) (if applicable).
- Aviation Safety Inspector – Cabin Safety (ASI-CS) (if applicable).
- Aviation Safety Inspector – Aircraft Dispatcher (ASI-AD) (if applicable).
- Instructional system design specialist (Air Carrier Training Systems and Voluntary Safety Programs Branch).
- Data management specialist (Air Carrier Training Systems and Voluntary Safety Programs Branch).

2) Additional technical personnel can be added to the ERT (as required):

- Principal security inspector (PSI).
- National Simulator Program (NSP).
- Flight Standardization Board (FSB) or Flight Operations Evaluation Board (FOEB).

E. Role of the Air Carrier Training Systems and Voluntary Safety Programs Branch. The Air Carrier Training Systems and Voluntary Safety Programs Branch will provide assistance to the Flight Standards District Office (FSDO), certificate management office (CMO),

UNCONTROLLED COPY WHEN DOWNLOADED
Check with FSIMS to verify current version before using

or certificate management unit (CMU) from initial application through the final fleet approval as a collaborative effort. An approved certificate holder's AQP application will initiate the Air Carrier Training Systems and Voluntary Safety Programs Branch /FSDO/CMO/CMU partnership. The Air Carrier Training Systems and Voluntary Safety Programs Branch will provide assistance in the development, implementation, and review as well as follow-on reviews of the certificate holder's AQP. The Air Carrier Training Systems and Voluntary Safety Programs Branch and the FSDO/CMO/CMU will manage program approvals and revisions through an ERT process. Since team members are not co-located, maintaining effective communications is an essential part of the ERT process. The Air Carrier Training Systems and Voluntary Safety Programs Branch will provide the ERT with collaborative program management tools to improve and facilitate the review process.

F. Role of the Air Carrier Training Systems and Voluntary Safety Programs Branch Manager. The FAA manager is the person responsible for ensuring that the regulatory requirements for AQP are met and approved AQP standards are maintained. In this capacity, the FAA Air Carrier Training Systems and Voluntary Safety Programs Branch manager provides oversight of the AQP process and documentation through all phases. The manager will also chair the AQP ERT. The manager will retain a quality assurance (QA) role and coordinate with the POI on any modifications and subsequent approvals throughout the life of the AQP.

G. Role of the POI and/or TCPM. The POI and/or TCPM are responsible for ensuring that AQP regulatory requirements are met and that through surveillance the AQP provides a satisfactory level of safety and airman competence. The POI and/or TCPM will provide oversight of the instructor/evaluator program and adherence to approved documentation for all AQP curricula. The POI and/or TCPM will coordinate with the manager of the Air Carrier Training Systems and Voluntary Safety Programs Branch any modifications and subsequent approvals throughout the life of the AQP.

Table 3-78. Approval Authority Matrix for Each AQP Curriculum

Document Title	Approval Authority by Phase				
	I	II	III	IV Initial	V Final
Application	Air Carrier Training Systems and Voluntary Safety Programs Branch				
Task Analysis		ERT	ERT	ERT	ERT
Qualification Standards		ERT	ERT	ERT	ERT
Instructional Development Methodology		ERT	ERT	ERT	ERT
Curriculum Outline		ERT	ERT	ERT	Revision POI
Implementation and Operations Plan (I&O Plan)		ERT	ERT	ERT	ERT

UNCONTROLLED COPY WHEN DOWNLOADED
Check with FSIMS to verify current version before using

H. Approval Authority. Table 3-78, Approval Authority Matrix for Each AQP Curriculum, summarizes the approval authority by phase and AQP document. Except for the Phase I application, Line Operational Evaluation (LOE) scenario content, and Phase V curriculum outline revisions, the ERT is the approving authority for all AQP documents and document revisions in all phases. All ERT AQP approval letters will be forwarded through the POI/TCPM to the certificate holder. For all AQP documents and phases for which the ERT is designated as the approval authority, the FAA Air Carrier Training Systems and Voluntary Safety Programs Branch manager and the POI/TCPM will cosign the approval letters. Following approval for continuing operation (Phase V), approval of curriculum outline changes will be managed and signed by the POI. (See Figure 3-99, Sample Approval Letter—Phase II; Figure 3-100, Sample Approval Letter—Phase III; Figure 3-101, Sample Approval Letter—Phase IV; and Figure 3-102, Sample Approval Letter—Phase V).

I. Training Center Requirements (Part 121, § 121.923). A training center may apply to develop a provisionally approved AQP prior to the establishment of a contract, agreement, or other arrangement to provide such training to a specific part 121 or 135 certificate holder, but may not implement an AQP training program until FAA approval specific to a certificate holder has been received.

3-1567 PHASED APPROVAL PROCEDURES. The following paragraphs describe how the FAA will work with an applicant to review or analyze material and to provide guidance for phased approvals. Applicants must develop and implement their AQP in five sequential phases:

- Phase I—Initial Application.
- Phase II—Curriculum Development.
- Phase III—Training System Implementation.
- Phase IV—Initial Operations.
- Phase V—Continuing Operations.

J. Phase I—Initial Application. Refer to the current edition of Advisory Circular (AC) 120-54, Advanced Qualification Program, and Volume 3, Chapter 21, Section 1, Figure 3-96, Advanced Qualification Program—Documentation Checklist and Review Job Aid.

1) Applicant. The applicant must submit a written application to the manager of the Air Carrier Training Systems and Voluntary Safety Programs Branch and to the POI/TCPM, consisting of an application cover letter stating intent to develop, implement, and operate an AQP.

2) FAA Review. The Air Carrier Training Systems and Voluntary Safety Programs Branch will accomplish the review and analysis of the application as follows:

- The applicant’s proposed methodology for program development.
- The applicant’s ability to execute the processes of development, implementation, and operation.
- Missing or incomplete application information.

UNCONTROLLED COPY WHEN DOWNLOADED
Check with FSIMS to verify current version before using

3) Application Approval. After determining that the applicant's submittal is satisfactory, the Air Carrier Training Systems and Voluntary Safety Programs Branch manager, in collaboration with the POI/TCPM, will approve acceptance of the application. This approval will permit the applicant to proceed to Phase II.

K. Phase II—Curriculum Development. Refer to AC 120-54 and Figure 3-96.

1) Required Documents. The applicant must submit the following documents to the ERT:

- A current, complete copy of the flight operations training manual (or comparable document), with permanent distribution to the certificate-holding district office (CHDO) and Air Carrier Training Systems and Voluntary Safety Programs Branch of future changes/revisions.
- Such other publications, certificate holder/applicant manuals, and manufacturer documentation as requested by the ERT to assist in the team's activities.
- Supporting task analysis.
- Qualification standards.
- Instructional systems development methodology.
- Curriculum outline(s).
- AQP Implementation and Operations Plan (I&O Plan).

2) Review and Evaluation.

a) The ERT must evaluate all documents for completeness and accuracy of technical content. The content of the supporting task analysis and qualification standards must be reviewed for comparison to the 14 CFR sections they replace (e.g., 14 CFR parts 61, 63, 65, 121, 121 appendices E and F, and 135 (see Figure 3-105, Qualifications Standards Document—Regulatory Comparison Chart)), the practical test standards (PTS), FSB reports, and the air carrier's operations specifications (OpSpecs). (See Figure 3-96.)

b) The ERT must review the applicant's instructional systems development methodology with respect to the means proposed for ensuring that the content of the supporting task analysis will be incorporated into the curriculum, and for consistency with the guidelines of Volume 3, Chapter 19. (See Figure 3-96 (Job Aid)).

c) The ERT must review the I&O Plan for completeness, feasibility, and adequacy of the applicant's resources to support and maintain the proposed AQP curriculum. (See Figure 3-96 (Job Aid)).

d) Upon satisfactory completion by the applicant of all requested changes, the Air Carrier Training Systems and Voluntary Safety Programs Branch manager and the POI/TCPM will jointly approve the applicant's documentation (see Figure 3-96 (Job Aid)). This approval will allow the applicant to proceed to Phase III.

UNCONTROLLED COPY WHEN DOWNLOADED
Check with FSIMS to verify current version before using

L. Phase III—Implementation. In this phase, the applicant will complete development of required courseware and conduct preliminary assessment of training resources and materials, such as dry running new Line-Operational Simulation (LOS) and LOE scenarios, testing the feasibility of proposed data acquisition strategies, or other such activities as are called for in the applicant's I&O Plan. AQP qualification and observation of instructors and evaluators must be accomplished in this phase. Similarly, if not already completed, flight training equipment must be qualified by the FAA in accordance with 14 CFR part 60 policies and procedures.

1) FAA Review and Evaluation. FAA activities in this phase will consist principally of observing or participating in new LOS/Special Purposed Operational Training (SPOT)/LOE scenarios and monitoring and observing the AQP training provided to instructors and evaluators.

a) Surveillance of Phase III activities.

b) The manager of the Air Carrier Training Systems and Voluntary Safety Programs Branch, in coordination with the ERT, will determine the appropriate level of Air Carrier Training Systems and Voluntary Safety Programs Branch support for each AQP program. A number of considerations influence resource allocations related to field office direct support. The considerations range from carrier compliance history to FAA staffing experience within specific field offices. Accordingly, the Air Carrier Training Systems and Voluntary Safety Programs Branch will endeavor to ensure that training programs with identified levels of risk receive the appropriate level of surveillance.

c) The I&O Plan.

1. The ERT must evaluate the applicant's readiness to conduct and maintain the proposed AQP curriculum.

2. Once Phase III has concluded, the applicant will provide the ERT with an updated I&O Plan.

3. The ERT must coordinate the resolution of any remaining concerns as required. Based on the recommendations of the ERT, the Air Carrier Training Systems and Voluntary Safety Programs Branch manager and the POI will approve or deny Phase IV—Initial Operations.

4. Initial approval permits the applicant to execute the updated I&O Plan through the qualification or continuing qualification cycle (usually 24 months). The AQP curriculum's Phase IV expiration will be set by the ERT in the approval letter. (See Volume 3, Chapter 19, Section 2, Figure 3-71, Letter of Initial Approval (Part 135), and Figure 3-72, Letter of Initial Approval (Part 121)).

5. The ERT will then notify the certificate holder/applicant that the AQP has been approved under part 121 subpart Y for initial operations.

UNCONTROLLED COPY WHEN DOWNLOADED
Check with FSIMS to verify current version before using

2) OpSpecs Entry.

3) Approval of Initial Operations. Phase IV requires the air carrier to add an entry into the automated OpSpecs through Web-based Operations Safety System (WebOPSS):

4) OpSpec A034, Advanced Qualification Program (AQP). (See Figure 3-103, Operations Specification.)

M. Phase IV—Initial Operations.

1) Applicant. The applicant operates and maintains an approved AQP curriculum, submits updated training program evaluation results through the ERT as appropriate, and submits digital performance proficiency data directly to the Air Carrier Training Systems and Voluntary Safety Programs Branch in accordance with the requirements specified for the applicant's program.

2) Review and Evaluation. The Air Carrier Training Systems and Voluntary Safety Programs Branch and the certificate holder or applicant must accomplish trend analysis of the AQP data. Surveillance of all of the certificate holder's or applicant's Phase IV operations must be accomplished by inspectors who are knowledgeable of the applicant's approved AQP, and by other FAA representatives, as appropriate.

3) Focus. The focus of this phase is validating the AQP curriculum through the acquisition of performance/proficiency data, surveillance, and lessons learned during the course of conducting the curriculum. Applicants will summarize the lessons learned and adjustments made to the curriculums in the annual report. In addition, adjustments made to the AQP will be reflected in revisions to the approved AQP documents. A joint ERT and certificate holder or applicant program review is recommended after completion of the first qualification curriculum or continuing qualification evaluation period, with periodic reviews as required thereafter during the first continuing qualification cycle. The purpose of these reviews is to identify, recommend, and plan needed changes. At the midpoint of Phase IV, the first annual report will be submitted to the ERT. A joint review and annual report will be accomplished prior to Phase V approval.

4) Notification. The ERT will notify the certificate holder or applicant by letter that the AQP has been approved for Phase V (see Figure 3-102).

5) OpSpec A034. The POI and the certificate holder must modify the previously issued A034 OpSpec paragraph to include the Phase V approval date.

N. Phase V—Continuing Operations. Phase V involves continuing operation of the certificate holder's AQP. The certificate holder's procedures for curriculum maintenance, as documented in the I&O Plan, must be executed on a continuing basis and will be reviewed periodically by the FAA, as appropriate. The certificate holder will submit student proficiency data to the Air Carrier Training Systems and Voluntary Safety Programs Branch on a continuing basis for trend analysis purposes. The Air Carrier Training Systems and Voluntary Safety Programs Branch will provide POIs with periodic reports on the results of those analyses, as required.

UNCONTROLLED COPY WHEN DOWNLOADED
Check with FSIMS to verify current version before using

3-1568 METHOD OF GRANTING INITIAL OR PROVISIONAL APPROVAL.

O. Approval by Letter. The ERT will grant initial or provisional AQP approval by letter. The Air Carrier Training Systems and Voluntary Safety Programs Branch manager and POI/TCPM must sign all letters of initial/provisional approval. The approval letter must include at least the following information:

- The specific identification of the curriculums and curriculum segments initially or provisionally approved, including page numbers and/or revision control dates (date of List of Effective Pages (LEP)).
- A statement that initial or provisional approval is granted, including expiration date(s).
- Any specific conditions affecting the approval.
- A request that the applicant provide the FAA with advanced notice of scheduled activities so evaluations may be planned.
- Directions to enter OpSpec A034, if appropriate.

P. Copies. A copy of the approval letter must be maintained by the certificate holder, the CHDO, and by the Air Carrier Training Systems and Voluntary Safety Programs Branch. For a training center, copies of a provisional approval letter must be maintained at the training center, at the FAA district office responsible for oversight of the training center, and by the Air Carrier Training Systems and Voluntary Safety Programs Branch. When a training center's AQP is approved for a specific air carrier, copies of the approval letter must be maintained by the above three offices, as well as by the CHDO and the certificate holder.

Q. Stamped Approval Endorsement or an Acceptable Substitute (i.e., Electronic Stamp). For initial and final approval, the LEP of all AQP required documents are stamped approved, dated, and signed by the POI.

Figure 3-97. Example Initial Approval Stamp

FAA INITIAL APPROVAL
OFFICE DESIGNATOR:
EFFECTIVE DATE:
NAME:
SIGNATURE:

R. Provisional Approval for a Training Center.

1) Section 121.923 provisional approval allows a training center to engage with a part 121 or 135 certificate holder in tailoring a generic AQP curriculum to a given air carrier's specific operations. The major difference between the development of an AQP by a training center and by an air carrier is that the training center can develop generic AQP documentation and individual curriculum segments through Phase II. This documentation is given a provisional approval. A provisional AQP allows a training center to accomplish front-end AQP development through Phase II and to offer its services as an approved AQP provider before establishing

UNCONTROLLED COPY WHEN DOWNLOADED
Check with FSIMS to verify current version before using

a contract or other arrangements with a specific certificate holder. An application for provisional approval must contain the same information as that specified in this chapter for a certificate holder, except that certificate holder-specific information may be omitted.

2) A provisional AQP cannot be employed for use with a specific certificate holder without additional development to tailor the program to the needs of a specific air carrier.

S. Request and Approval for Use of a Training Center.

1) A certificate holder or applicant that wishes to use a training center for AQP training must submit a letter of request directly to the Air Carrier Training Systems and Voluntary Safety Programs Branch manager, with a copy to the POI and TCPM. The letter of request should specify the training center, identify the AQP curriculum, and cite the timeframe for which such AQP services would be conducted.

2) The AQP review process and curriculum documentation required for a training center to obtain approval to conduct an AQP for a specific certificate holder is identical to that required of an air carrier. All documentation must be consistent with the multi-phased development process outlined in this guidance, and must be specific to the certificate holder for whom such training will be conducted.

3) AQP documentation developed by a training center for a specific certificate holder or applicant will be submitted directly by the training center to the Air Carrier Training Systems and Voluntary Safety Programs Branch manager for review and approval. The Air Carrier Training Systems and Voluntary Safety Programs Branch manager will then form an AQP ERT, as appropriate. Once formed, the ERT review and approval process is identical to the review and approval process outlined in this section.

3-1569 METHOD OF DENYING INITIAL OR PROVISIONAL APPROVAL. If the FAA determines that initial approval (or provisional approval for training centers) must be denied, the FAA must notify all the affected certificate holders/applicants in writing. The letter must identify any deficiency that was the cause of denial. The principal applicant may redevelop or correct the deficiencies and resubmit the AQP for approval.

3-1570 REVISION CONTROL PROCESS.

T. Program Revisions. After a certificate holder begins training and qualification under an AQP, the FAA may require the certificate holder, pursuant to § 121.405(e), to make program revisions. AQP document revisions are submitted to the FAA Air Carrier Training Systems and Voluntary Safety Programs Branch manager and the POI. In Phases II through IV, the revision is reviewed by the ERT and approved using the notification process for the appropriate curriculum phase. The process is identical in Phase V, except that review and approval of revisions to the curriculum outline are made directly by the POI.

UNCONTROLLED COPY WHEN DOWNLOADED
Check with FSIMS to verify current version before using

U. Copies of Revisions. Copies of all revisions in all phases, including the curriculum outline, will be provided to both the Air Carrier Training Systems and Voluntary Safety Programs Branch manager and the POI. Each revision must indicate which AQP documents are being revised, and must include the following items:

- A brief synopsis of each change and what pages/items are affected.
- Change bars or acceptable substitute identifying the text/chart that has been changed.
- The date of the revision and revision number on each page or graphic.
- The LEP.

NOTE: If a certificate holder chooses to integrate the required AQP documents into an established manual structure, each document's location must be identified and each revision request must identify the AQP document that is being revised and which manual contains the document.

V. Revising Approved Portions of an AQP. A revision to an approved portion (initial or final) of an AQP cannot be implemented until the applicant receives FAA approval.

3-1571 WITHDRAWAL OF INITIAL OR PROVISIONAL APPROVAL. The FAA may decide to withdraw initial or provisional approval at any time the AQP is not in regulatory compliance, does not provide for safe operations, or does not effectively prepare crewmembers or dispatchers to meet qualification standards. The FAA will withdraw initial or provisional approval in writing, stating the reasons for the withdrawal and the effective date of withdrawal. An applicant who receives a letter of withdrawal may revise or refine the curriculum and resubmit it for initial or provisional approval.

3-1572 FINAL APPROVAL. Based on the results of evaluations accomplished during the period of initial approval, the FAA will grant or deny final approval of an AQP. Final approval is accomplished by stamped endorsement of AQP documents and by approval letter.

W. Stamped Approval Endorsement or an Acceptable Substitute (i.e., Electronic Stamp). For final approval, the LEPs of all AQP required documents are stamped approved, dated, and signed by the POI. As approved changes are made to AQP documents, the "Final Approval" endorsement must be reaccomplished on each revised page of the LEP.

Figure 3-98. Example Final Approval Stamp

FAA FINAL APPROVAL
OFFICE DESIGNATOR:
EFFECTIVE DATE:
NAME:
SIGNATURE:

X. Approval Letter. The ERT will grant final AQP approval by letter. The Air Carrier Training Systems and Voluntary Safety Programs Branch manager and POI/TCPM must sign all letters of final approval. After final approval is granted, the POI will sign all curriculum outline

UNCONTROLLED COPY WHEN DOWNLOADED
Check with FSIMS to verify current version before using

approvals. The letter must contain the same information as the initial approval letter except the expiration date.

Y. Copies. A copy of the approval letter must be kept on file in the CHDO, at the Air Carrier Training Systems and Voluntary Safety Programs Branch, by the certificate holder or applicant, and, where applicable, at the location designated as the principal training site of a training center approved under § 121.923.

3-1573 GENERAL PROVISIONS FOR WITHDRAWAL OF FINAL APPROVAL. The FAA may withdraw final approval of a curriculum at any time if the FAA determines that sufficient safety reasons exist or that required data is not being maintained and provided. Before withdrawing approval, the FAA will make reasonable efforts to convince an applicant to correct its AQP. The FAA will withdraw approval by letter. The letter must identify the affected curriculums, state the reasons for the withdrawal, and state the effective date of the withdrawal (except in an emergency, not less than 7 days after receipt of the letter). The letter must advise the certificate holder that withdrawal may be appealed and provide instructions on how to appeal.

3-1574 APPEAL OF A WITHDRAWAL. To appeal withdrawal of final approval, a certificate holder should petition the Director of Flight Standards Service for reconsideration within 30 days after receiving withdrawal notification. The petition should be in writing and should explain in detail why the certificate holder believes the withdrawal should not occur.

Z. Denial of Appeal. The Director may immediately deny the petition after considering all relevant information presented if the Director believes that an emergency exists that directly affects aviation safety. In this case, the Director will inform the certificate holder, by letter, of the decision to deny the appeal due to the existence of an emergency. The letter must state that an emergency exists and describe the deficiencies and the actions necessary to correct them.

AA. Stay of Withdrawal. If the Director does not believe that an emergency exists, the Director will carefully consider both the certificate holder's petition for appeal and the FAA's reason for withdrawal of approval. In this case, the certificate holder's petition, provided it goes out within 30 days, stays withdrawal, and the certificate holder may continue to use the AQP curriculum pending the decision of the Director. The Director may find it necessary to conduct additional evaluations of the certificate holder's AQP.

BB. Director's Final Decision. In any case, the Director will make a final decision within 60 days of receiving the certificate holder's petition. The Director may rescind or modify the letter of withdrawal or uphold the withdrawal. If the decision is to modify or uphold the withdrawal, the certificate holder will be notified by letter. The letter must contain the reasons for denying all or part of the petition.

UNCONTROLLED COPY WHEN DOWNLOADED
Check with FSIMS to verify current version before using

3-1575 DATABASE MANAGEMENT AND ANALYSIS.

CC. Data Collection and Analysis. Data collection and analysis are fundamental parts of an AQP. Data collection is required for all AQP curricula (§ 121.917(c)) as defined by each carrier's approved AQP data collection and analysis section of the certificate holder's I&O Plan. Data collection and analysis processes must ensure that the certificate holder obtains performance information on its personnel, instructors, and evaluators that will enable the certificate holder and the FAA to determine whether the form and content of training and evaluation activities are satisfactorily accomplishing the overall objectives of the curriculum.

DD. AQP Quality Control (QC) Requirements. An AQP requires data collection in order to establish and maintain QC of curricula for crewmembers, dispatchers, instructors, and evaluators. Good data management practices are necessary to determine whether an AQP is meeting its objectives. Considerations for data entry include the method, the hardware/software required for data input, and the hardware/software required for data storage and manipulation. Database design is at the discretion of the carrier, providing that the design can generate the required report tables specified.

EE. Data Collection Requirements. Data collection requirements for the AQP vary with the curriculum, the type of curriculum activity (training, validation, or evaluation), the type of participant (crewmember, dispatcher, instructor, or evaluator), and the overall management objectives for use of the data. All performance data collected on each proficiency objective must be relative to the applicable AQP qualification standards defined for the training and evaluation activities.

FF. Collecting and Storing Data. Data is collected from each student's performance and is de-identified and stored in aggregate in a Performance/Proficiency Data Base (PPDB). This data is used to analyze training programs and/or groups of participants, not to track individual accomplishment. Collection and analysis of this data is designed to identify and correct problems, validate AQP curriculums, and identify developing trends.

GG. Participant Data Collection. AQP requires that the data collection conducted by a participant for its own use in monitoring training will support more analytical detail and diagnostic functions than the data collected for submission to the FAA. The participant must do an analysis of the effectiveness of the training.

HH. Submitting De-identified Data. The FAA has established the requirements for the submission of de-identified data by curriculum. Specific guidance for data management is found in AC 120-54 and the AQP Data Management Guide produced by the Airlines for America's (A4A) Data Management Focus Group. Copies are available from the Air Carrier Training Systems and Voluntary Safety Programs Branch or can be downloaded from the AQP website (http://www.faa.gov/training_testing/training/aqp/). The list of data analysis questions/queries maintained in the Air Carrier Training Systems and Voluntary Safety Programs Branch Data Analysis and Reporting Tool (DART) are shown in Figure 3-104, Data Analysis Questions.

UNCONTROLLED COPY WHEN DOWNLOADED
Check with FSIMS to verify current version before using

II. Data Submission Requirements. Submission requirements are defined in three tables; the Performance Data Report Table (PDRT), the Skill Reason Table (SklRsn), and the Training Objectives Report Table (TORT). The information in these tables is downloaded from the carrier's PPDB. The submissions are forwarded to the FAA Air Carrier Training Systems and Voluntary Safety Programs Branch manager electronically in calendar-month blocks using a Microsoft Access (.mdb) format.

JJ. Gradesheet Maintenance. The ERT should maintain copies of all gradesheets used in the validations and evaluations. Although gradesheets are not approved, the ERT must be able to compare them to the approved curriculum outlines and to ensure correlation between the data collecting requirements and the final product.

KK. Analyzing Data. The Air Carrier Training Systems and Voluntary Safety Programs Branch will accomplish proficiency analysis, validation of performance measures, and other statistical analysis and research for approved AQPs. The Air Carrier Training Systems and Voluntary Safety Programs Branch analyzes the de-identified data using standard automated queries and reports to identify AQP performance trends.

LL. Web-Based Data Sites. A website has been created to facilitate the exchange of AQP performance data between the Air Carrier Training Systems and Voluntary Safety Programs Branch and the CHDO using a Web-based electronic library. The library contains:

- Air Carrier Training Systems and Voluntary Safety Programs Branch QC reports on data files submitted by the airline each month.
- All performance data submitted by the airline for a given year.
- Quarterly and annual performance data assessments completed by the Air Carrier Training Systems and Voluntary Safety Programs Branch.
- Pivot tables containing 6 months of PDRT data.
- Quick reports that are designed to provide a quick overview of an airline's AQP.

UNCONTROLLED COPY WHEN DOWNLOADED
Check with FSIMS to verify current version before using

Figure 3-99. Sample Approval Letter—Phase II

Date

Name

Director, Flight Standards and Training

Airlines, Inc.

747 Aviation Blvd.

Houston, TX 77032

Dear:

This letter is to notify you that the Federal Aviation Administration (FAA) Extended Review Team (ERT) Air Carrier Training Systems and Voluntary Safety Programs Branch and ____ certificate management office (CMO) has completed its review of the B-757 Advanced Qualification Program (AQP) Phase II documents listed below.

The following documents are approved:

B-757 Pilot Task List, LEP dated 08/01/04.
B-757 Qualification Standards, LEP dated 08/20/04.
B-757 Curriculum Segment Outlines, LEP dated 08/30/04.
Instructional System Design Methodology, LEP dated 08/01/04.
Implementation and Operations Plan, LEP dated 08/01/04.

Contact Inspector _____ or Inspector _____if you have any questions.

Sincerely,

_____ _____

Manager, Air Carrier Training Systems and Voluntary Safety Programs Branch

Principal Operations Inspector

UNCONTROLLED COPY WHEN DOWNLOADED
Check with FSIMS to verify current version before using

Figure 3-100. Sample Approval Letter—Phase III

Date

Name

Director, Flight Standards and Training

Airlines, Inc.

747 Aviation Blvd.

Houston, TX 77032

Dear:

This letter is to notify you that the Federal Aviation Administration (FAA) Extended Review Team (ERT) Air Carrier Training Systems and Voluntary Safety Programs Branch and _____ certificate management office (CMO)) has completed its review of the B-757 Advanced Qualification Program (AQP) qualification and continuing qualification curriculums. This letter certifies that _____ Airlines AQP, B-757 qualification/continuing qualification, are approved for Phase III Implementation (Small Group Tryouts), under Title 14 of the Code of Federal Regulations (14 CFR) part 121 subpart Y, and in accordance with the approved _____ Airlines Implementation and Operations Plan (I&O Plan). This approval is effective 7 January 2005 and is valid for a period of 120 days.

Please provide a master schedule of events to the Air Carrier Training Systems and Voluntary Safety Programs Branch and the principal operations inspector (POI) as soon as possible so the ERT may offer assistance and review as needed. Contact Inspector _____ or Inspector _____ if you have any questions.

Sincerely,

_____ _____

Manager, Air Carrier Training Systems and Voluntary Safety Programs Branch

Principal Operations Inspector

UNCONTROLLED COPY WHEN DOWNLOADED
Check with FSIMS to verify current version before using

Figure 3-101. Sample Approval Letter—Phase IV

Date

Name

Director, Flight Standards and Training

Airlines, Inc.

747 Aviation Blvd.

Houston, TX 77032

Dear:

This letter is to notify you that the Federal Aviation Administration (FAA) Extended Review Team (ERT) Air Carrier Training Systems and Voluntary Safety Programs Branch and _____ certificate management office (CMO) has completed its review of the B-757 Advanced Qualification Program (AQP). We are pleased to inform you that your B-757 Continuing Qualification curriculum has been approved under Title 14 of the Code of Federal Regulations (14 CFR) part 121 subpart Y for AQP Phase IV, Initial Operations, effective 7 June 2005.

The expiration date of this initial approval is _____. Please provide the CMO with advance notice of any training or evaluation conducted under this curriculum to allow for surveillance of the training in accordance with part 121 subpart Y. Future page changes to this curriculum must be accomplished in accordance with the approved revision control methodology.

The following documents are approved:

B-757 Pilot Task List, Revision 2, LEP dated 05/20/05.
B-757 Qualification Standards, Revision 2, LEP dated 05/15/05.
B-757 Curriculum Segment Outlines, Revision 2, LEP dated 05/15/05.
Instructional System Design Methodology Revision 2, LEP dated 05/15/05.
Implementation and Operations Plan, Revision 2, LEP dated 05/15/05.
Note: Approval to conduct this curriculum will require the appropriate entry in Operations Specification (OpSpec) A034.

Contact Inspector _____ or _____ if you have any questions.

Sincerely,

_____ _____

Manager, Air Carrier Training Systems and Voluntary Safety Programs Branch

Principal Operations Inspector

UNCONTROLLED COPY WHEN DOWNLOADED
Check with FSIMS to verify current version before using

Figure 3-102. Sample Approval Letter—Phase V

Date

Name

Director, Flight Standards and Training

Airlines, Inc.

747 Aviation Blvd.

Houston, TX 77032

Dear:

This letter is to notify you that the Federal Aviation Administration (FAA) Extended Review Team (ERT) Air Carrier Training Systems and Voluntary Safety Programs Branch and _____ certificate management office (CMO) has completed its review of the B-757 Advanced Qualification Program (AQP). We are pleased to inform you that your B-757 Continuing Qualification curriculum has been approved under Title 14 of the Code of Federal Regulations (14 CFR) part 121 subpart Y for AQP Phase V, Continuing Operations, effective _____.

Please provide the CMO with advance notice of any training or evaluation conducted under this curriculum to allow for surveillance of the training in accordance with part 121 subpart Y. Future page changes to this curriculum must be accomplished in accordance with the approved revision control methodology.

The following documents are approved:

B-757 Pilot Task List, Revision 5, LEP dated 10/01/07.
B-757 Qualification Standards, Revision 8, LEP dated 10/25/07.
B-757 Curriculum Segment Outlines, Revision 18, LEP dated 05/03/08.
Instructional System Design Methodology Revision 2, LEP dated 05/15/05.
Implementation and Operations Plan, Revision 3, LEP dated 09/01/06.

Note: Approval to conduct this curriculum will require the appropriate entry in Operations Specification (OpSpec) A034.

Contact Inspector _____or Inspector _____if you have any questions.

Sincerely,

_____ _____

Manager, Air Carrier Training Systems and Voluntary Safety Programs Branch

Principal Operations Inspector

UNCONTROLLED COPY WHEN DOWNLOADED
Check with FSIMS to verify current version before using

Figure 3-103. Operations Specification

Following initial/Phase IV approval, all AQP air carriers are required to be issued Operations Specification (OpSpec) A034.

Sample OpSpec A034, Advanced Qualification Program (AQP).

a. The certificate holder is authorized to conduct operations of an Advanced Qualification Program (AQP) under Title 14 of the Code of Federal Regulations (14 CFR) part 121 subpart Y, §§ 121.901-121.925 in accordance with the following provisions:

b. The certificate holder is authorized to conduct operations under an AQP with the following indoctrination curriculum:

Indoctrination Curriculum Initial Approval Date	Final Approval Date
05/10/04	05/31/06

Indoctrination Curriculum. Only one entry is required (not fleet-specific) with an entry for initial and final approval, as applicable.

c. The certificate holder is authorized to conduct operations in accordance with the following aircraft fleets and AQP curricula:

Aircraft	Qualification Curriculum Dates:		Continuing Curriculum Dates:		Instructor Evaluator Dates:		Comment
M/M/S	Initial	Final	Initial	Final	Initial	Final	
B737-200	5/19/04	5/31/06	2/20/05		4/09/04	5/1/06	
B737-800	11/1/05		7/1/04	6/30/06	7/1/04	6/30/06	
B757 B767	9/20/05		1/15/06		9/20/05		
B747-400	11/1/05		7/1/04	6/30/06	4/10/04	4/30/06	
B747-200	1/15/06				1/15/06		
A319 A320			5/20/06		4/30/06		

Enter the date of initial (Phase IV) and final (Phase V) approval for each make, model, and series (M/M/S) fleet type. Multiple fleet types that are considered one fleet type for certification and/or training can be entered on one line or separate entries can be entered. The differences curriculums do not have to be accounted for in the OpSpec.

(1) Instructor/Evaluator–Instructors and evaluators must be trained prior to conducting an AQP curriculum. Consequently, the first date entered in the initial approval block for an instructor/evaluator curriculum should coincide with, or be prior to, the first entry made in the fleet qualification or continuing qualification initial approval column. The date of final approval simply reflects the date final approval of the instructor/evaluator curriculum was granted.

UNCONTROLLED COPY WHEN DOWNLOADED
Check with FSIMS to verify current version before using

Figure 3-104. Data Analysis Questions

Data Analysis Questions
Which records in the Performance and Objective tables contain incomplete data values?
How many pilots and evaluations were graded for each evaluation type?
Which measured items are being performed for each evaluation type and how often are they being performed?
Which training objectives are evaluated for each Advanced Qualification Program (AQP) measured item?
Which measured items listed in the Training Objective Report Table (TORT) were not performed in this data set?
What ratings were given for each measured item, by evaluation type?
What is the diagnostic content for each drill-down layer of performance data?
What is the MRate distribution of MItems?
Which measured items are receiving unsatisfactory ratings?
How many measured items with unsatisfactory ratings did each pilot receive?
Which training objectives support measured items receiving unsatisfactory ratings?
Are any currency measured items receiving unsatisfactory ratings?
Are any critical measured items receiving unsatisfactory ratings?
How many unsat First Look MItems were reported?
What measured item ratings are being assigned to each crew position?
What eval type ratings are being assigned for each crew position?
What measured item ratings are being assigned for each flight simulation training device (FSTD)?
What measured item ratings are being assigned to pilots flying with and without seat substitutes?
What measured item ratings are being assigned to pilots flying with seat substitutes as pilot in command (PIC), second in command (SIC), or Flight Engineer (FE)?
How often are seat substitutes being used?
What measured item ratings were given for each evaluation type?
What evaluation ratings are given for each evaluation type?
What measured item ratings were assigned by each evaluator?
What is the MRate grading average among evaluators?
What are MRate average statistics for evaluators?
What percent of sessions were observed by FAA inspectors?
What measured item ratings were assigned for sessions with and without FAA inspectors present?
What geographic areas are being covered in the random line checks?
What measured item ratings are being assigned for each geographic area?
What are the most frequent skill/reasons for measured item ratings?
Which Skill/Reasons are given for each MItem?
What comments are provided for each evaluation type?

UNCONTROLLED COPY WHEN DOWNLOADED
Check with FSIMS to verify current version before using

Figure 3-105. Qualifications Standards Document—Regulatory Comparison Chart

Part of the Qualifications Standards Document.

Regulatory Variances.

The Advanced Qualification Program (AQP) allows development of proficiency-based training programs that encourage innovation in the methods and technologies used during instruction and evaluation, as well as efficient management of the training systems. Since these innovations may require some departures from the current regulations, the approved qualification standards replace the applicable portions of the existing Title 14 of the Code of Federal Regulations (14 CFR) part 121 regulations and other Federal Aviation Administration (FAA) training guidance as the definitive basis for the training program. This section describes the variance from current regulations approved for XYZ's AQP qualification and continuing qualification curriculums.

Part 121, § 121.401(c).

Requires instructor or evaluator verification of qualification. AQP allows completion of distributed training (e.g., home study) to be verified by an entry into XYZ's flight operations computer system. Upon successful completion of a computer-generated, random question exam, completion of the exam is logged electronically to each pilot's records. In this way, qualification on distributed training is verified automatically, rather than an instructor certifying crewmember completion of the training at the training center.

Section 121.419(c)(2).

Specifies that initial ground training for pilots and Flight Engineers (FE) of Group II airplanes must be 120 programmed hours unless the FAA approves a reduction under § 121.405 guidance. XYZ's AQP initial/transition curriculum includes all subjects listed in § 121.419(a), but for most airplanes is planned for less than 120 hours. Refer to the curriculum outlines in the appendix for the specific hours planned for each curriculum in each fleet. The days of training and classroom hours planned for AQP are approximately the same number of days/hours in the currently approved part 121 programs, with principal operations inspector (POI) approval letter of hourly reduction under § 121.405.

Sections 121.424 and 121.441.

Refers to part 121 appendix E for the maneuvers and procedures to be included in flight training, and part 121 appendix F for the maneuvers and procedures to be included in the flight check. The maneuvers and procedures for training and checking in XYZ's AQP curricula are tailored for each airplane type and crew position and comply with the guidance in part 121 subpart Y, the current edition of Advisory Circular (AC) 120-54, Advanced Qualification Program, and as approved by FAA for training and checking under AQP. Refer to the paragraph below titled Section 121.441(b)(1) and part 121 appendices E & F for an explanation of the maneuver variances.

UNCONTROLLED COPY WHEN DOWNLOADED
Check with FSIMS to verify current version before using

Section 121.427(c)(1)(iii).

Specifies that recurrent ground training for pilots and FEs on Group II airplanes must consist of at least 25 hours unless reduced under § 121.405. XYZ's AQP continuing qualification (recurrent) ground training curriculum incorporates a total of 18 planned hours. This includes 5 hours of distributed training and 13 hours of self-study/classroom instruction in aircraft specific, human factors, general subjects, security, and emergency drill training. The enabling objectives to be trained and validated in the continuing qualification curriculum are presented in module format in accordance with this order, and described in the objectives section of this document. The days of training and classroom hours planned for AQP are approximately the same number of days/hours in the currently approved part 121 program, with POI approval letter of hourly reduction under § 121.405.

Section 121.433(a).

Specifies the crewmember must complete a training program approved under part 121 subpart N for the type airplane and crew position. XYZ's flight crewmembers will complete the training program approved under part 121 subpart Y (AQP).

Section 121.433(c)(1)(iii).

Specifies a 6-month pilot-in-command (PIC) recurrent training requirement. XYZ will conduct annual recurrent training and checking under the part 121 subpart Y full crew concept guidelines. Refer to the recurrent training curriculum outline in the appendix.

Section 121.433(c)(2).

Specifies that the proficiency check for pilots be as provided for under § 121.441. XYZ pilots in an AQP will complete the proficiency check as a Line Operational Evaluation (LOE) under the part 121 subpart Y full crew concept guidelines.

Section 121.434(g)(2).

References the § 121.441 proficiency check as the start of the 120 days for pilots to accomplish 100 hours of flight time for consolidation of knowledge and skills. In XYZ's AQP, the start of the 120 days for completion of consolidation of knowledge and skills will be completion of the LOE.

Section 121.441(a)(1)(i).

Specifies that the PIC accomplish a proficiency check within the preceding 12 months and in addition, within the preceding 6 months, either a proficiency check or an approved simulator course of training under § 121.409. In XYZ's AQP, PICs will be scheduled for an annual crew-oriented training and check (LOE) within the required 12 months (plus or minus 1 month). However, the PIC requirement at 6 months for either a proficiency check or a simulator training session will be eliminated. Exception: PICs in certain situations will be required training at the 6-month point (plus or minus 1 month).

UNCONTROLLED COPY WHEN DOWNLOADED
Check with FSIMS to verify current version before using

Part 121 appendices E & F; & FAA Order 8900.1.

Require an Air Transportation flight instructor to train pilots in the interior and exterior visual inspection. XYZ' s AQP allows the interior and exterior inspection (Supporting Proficiency Objectives (SPO) 1.1.6.2, Aircraft Inspection) to be trained and validated by a ground instructor during the ground training segment of the qualification curriculum using advanced pictorials.

Section 121.441(b)(1) and part 121 appendices E & F.

Specifies that the proficiency check for pilots include at least the procedures and maneuvers in part 121 appendix F. All appendix F events are included in appendix E. In addition, appendix E includes the following six additional events not listed for the proficiency check in appendix F:

Night takeoff and landings [II & IV];

Zero flap approaches [III(o), PIC only];

Missed approaches that include a power plant failure [III(p)(4)];

Landing and go around with the horizontal stabilizer out of trim [IV(b), PIC only];

Zero flap landings if the Administrator finds that event appropriate [IV(h), PIC only]; and

Manual reversion (if appropriate) [IV(i)].

In accordance with part 121 subpart Y and AC 120-54, the events to be trained and validated/evaluated in XYZ's AQP are the Terminal Proficiency Objectives (TPO) and SPO described in the Proficiency Objectives section of this document. While occasionally labeled differently, these TPOs and SPOs are very similar to the events listed in appendices E and F, and all appendix E and F events are included, except steep turns and circling approaches. Circling approaches are not authorized in XYZ's operations and are not included in the curriculum. See the Training & Evaluation Strategy section of this document for more information on training and evaluation procedures.

UNCONTROLLED COPY WHEN DOWNLOADED
Check with FSIMS to verify current version before using

Maneuvers	Part 121 Appendix E Air Carrier Training	Practical Test Standards (PTS) FAA-S-8081-5F	Part 121 Appendix F Proficiency Check	AQP Qualification Curriculum	AQP Continuing Qualification Curriculum
Preflight					
Equipment Examination	N/A	Required (Page 27)	Required	Written/ETS/ Oral	Written/ETS/Oral
Interior Preflight Inspection	Required	Required (Page 35)	Required	Maneuvers Validation (MV)/LOE	Line check
Exterior Preflight Inspection	Required	Required (Page 35)	Required	MV/LOE	Line check
Taxiing	Required	Required (Page 37)	Required	MV/LOE	Line check
Powerplant Checks	Required	Required (Page 39)	Required	MV/LOE	Line check
Takeoffs					
Normal Takeoffs	Required	Required (Page 40)	Required	MV/LOE	Line check
Instrument Takeoff	Required	Required (Page 43)	Required	MV/LOE	MV/LOE
Crosswind Takeoff	Required	Required (Page 40)	Required	MV/LOE	Line check
Takeoff with Powerplant Failure	Required	Required (Page 45)	Required	MV/LOE	MV/LOE
Rejected Takeoff	Required	Required (Page 46)	Required	MV/LOE	MV/LOE
Instrument Procedures					
Area Departure and Arrival	Required	Required (Pages 47 and 54)	Required [1 Waivable]	MV/LOE	Line check
Holding	Required	Required (Page 55)	Required [Waivable]	MV/LOE	Brief
Normal Instrument Landing System (ILS)	Required	Required (Page 56)	Required	MV/LOE	MV/LOE
Autopilot Coupled ILS	Not Required	Not Required	Not Required	Train to Proficiency	MV/LOE
Manually Controlled ILS with Powerplant Failure	Required	Required (Page 64)	Required	MV/LOE	MV/LOE
Non-Precision Approach	Required	Required (Page 58)	Required	MV/LOE	MV/LOE

UNCONTROLLED COPY WHEN DOWNLOADED
Check with FSIMS to verify current version before using

Maneuvers	Part 121 Appendix E Air Carrier Training	Practical Test Standards (PTS) FAA-S-8081-5F	Part 121 Appendix F Proficiency Check	AQP Qualification Curriculum	AQP Continuing Qualification Curriculum
Second Non-precision Approach	Required	Required (Page 58)	Required	Train to Proficiency	Train to Proficiency
Circling Approach	Required	Required (Page 59)	Required [Waivable]	Train to Proficiency	Brief
Missed Approach from ILS	Required	Required (Pages 60)	Required	MV/LOE	MV/LOE
Additional Missed Approach	Required	Required (Page 60)	Required	Train to Proficiency	Train to Proficiency
Missed Approach with Powerplant Failure	Required	Required (Page 60)	Examiner Discretion	MV/LOE	MV/LOE
In-Flight Maneuvers					
Steep Turns	Required	Required (Page 49)	Required	Train to Proficiency	N/A
Stall Prevention	Required	Required (Page 49)	Required [2 Waivable]	Train to Proficiency	Train to Proficiency
Flight Characteristics	As Necessary	As Necessary	As Necessary	Train to Proficiency	N/A
Powerplant Failures	Required	Required (Page 51)	Required	MV/LOE	MV/LOE
Abnormal and Emergency Procedures will include all systems maneuvers and procedures as required by Airplane Flight Manual (AFM)	Required	Required (Pages 71 and 72)	Required	A sampling of Abnormals and Emergencies will be trained in the full flight simulator (FFS) and evaluated during MV and LOE.	Abnormals and Emergencies will be evaluated during ground school, trained in the FFS, and evaluated during MV and LOE.
Landings					
Normal Landings	Required	Required (Page 62)	Required	MV/LOE	Line Check
Landing from an ILS	Required	Required (Page 63)	Required	MV/LOE	MV/LOE
Crosswind Landing	Required	Required (Page 62)	Required	MV/LOE	MV/LOE

UNCONTROLLED COPY WHEN DOWNLOADED
Check with FSIMS to verify current version before using

Maneuvers	Part 121 Appendix E Air Carrier Training	Practical Test Standards (PTS) FAA-S-8081-5F	Part 121 Appendix F Proficiency Check	AQP Qualification Curriculum	AQP Continuing Qualification Curriculum
Landing with Powerplant Failure	Required	Required (Page 64)	Required	MV/LOE	MV/LOE
Landing from a Circling Approach	Required	Required (Page 65)	Required	Train to Proficiency	N/A
Rejected Landing	Required	Required (Page 69)	Required	MV/LOE	MV/LOE
Zero Flap Landing	Required	Required (Page 69)	Not Required	FSB Report	FSB Report
Postflight					
After Landing	Not Required	Required (Page 73)	Not Required	Line Check	Line Check
Parking and Security	Not Required	Required (Page 75)	Not Required	Line Check	Line Check
Training					
Windshear/Microburst				Train to Proficiency	Train to Proficiency
Ground Proximity Warning System (GPWS) Escape				Train to Proficiency	Train to Proficiency
Low Visibility Taxi				Train to Proficiency	Train to Proficiency
Precision Runway Monitor (PRM)				Train to Proficiency	Train to Proficiency
Upsets/Catastrophic Failures				Train to Proficiency	Train to Proficiency
Mis Trim				Train to Proficiency	Train to Proficiency
Area Navigation (RNAV) Approach				Train to Proficiency	Train to Proficiency

Part 121 appendix H(6), Advanced Simulation Training Program.

Specifies that a special Line-Oriented Flight Training (LOFT) program is required, consisting of at least a 4-hour course of training for each flightcrew, including at least 2 flight segments of the operator's route: 1 segment of normal operating procedures and 1 segment in appropriate abnormal and emergency flight operations. XYZ's AQP is structured to comply with the guidance contained in part 121 subpart Y and AC 120-54. As such, training, validation, and evaluation are conducted with a complete crew using the concepts of LOS. While XYZ's AQP

UNCONTROLLED COPY WHEN DOWNLOADED
Check with FSIMS to verify current version before using

does not currently include a LOFT, it does include Special Purpose Operational Training (SPOT) sessions and incorporates an LOE as the final performance evaluation to confirm operational proficiency. In all respects, the LOE resembles the traditional LOFT scenarios currently used in the approved advanced simulation training program.

RESERVED. Paragraphs 3-1576 through 3-1590.

UNCONTROLLED COPY WHEN DOWNLOADED
Check with FSIMS to verify current version before using

VOLUME 3 GENERAL TECHNICAL ADMINISTRATION

CHAPTER 51 PART 133 EXTERNAL LOAD OPERATIONS

Section 2 Part 133 Airworthiness Related Tasks

3-4106 EXTERNAL-LOAD OPERATIONS. Title 14 of the Code of Federal Regulations (14 CFR) part 133 is applicable to operators conducting rotorcraft external-load operations. These operators must acquire a Rotorcraft External-Load Operator Certificate, and the operator must have at least 6 months of exclusive use of at least one rotorcraft certificated under 14 CFR part 21, § 21.25; 27; or 29, for the special purpose of rotorcraft external-load operations.

NOTE: Conduct a ramp inspection per Volume 6, Chapter 1, Section 4. The attaching means and quick-release devices utilized for human external cargo (HEC) must meet the requirements of HEC certification per part 27 or 29.

3-4107 ATTACHING MEANS. The attaching means for the external load must have been approved under:

- Part 8 of the Civil Air Regulations (CAR), on or before January 17, 1964;
- Part 133, before February 1, 1977;
- Part 27 or 29 of this chapter, as applicable, irrespective of the date of approval; or
- Section 21.25 of this chapter.

3-4108 QUICK-RELEASE DEVICES. Each quick-release device must have been approved under:

- Part 27 or 29 of this chapter, as applicable;
- Part 133, before February 1, 1977; or
- Section 21.25 of this chapter, except the device must comply with part 27, § 27.865(b) and part 29, § 29.865(b), as applicable, of this chapter.

3-4109 LOAD CLASSES. Aircraft external-load operators may apply for authorization to operate in load classes A, B, C, and D.

A. Class A. An external cargo load that cannot move freely, cannot be jettisoned, and does not extend below the landing gear.

B. Class B. An external cargo load that can be jettisoned and is lifted free of land and/or water.

MM. Class C. An external cargo load that can be jettisoned and remains in contact with land or water during the rotorcraft operation.

NN. Class D. An external cargo load other than Class A, B, or C. Class D is approved on an individual basis through the issuance of operations specifications (OpSpec). A class D authorization has special considerations, especially in terms of operating rules.

RESERVED. Paragraphs 3-4110 through 3-4125.

UNCONTROLLED COPY WHEN DOWNLOADED
Check with FSIMS to verify current version before using

VOLUME 3 GENERAL TECHNICAL ADMINISTRATION

CHAPTER 51 PART 133 EXTERNAL LOAD OPERATIONS

Section 4 Evaluate Part 133 Operator

3-4151 PROGRAM TRACKING AND REPORTING SUBSYSTEM (PTRS) ACTIVITY CODES.

A. Maintenance: 3202, 3627.

B. Avionics: 5201.

3-4152 OBJECTIVE. This chapter provides guidance for evaluating an applicant for a Title 14 of the Code of Federal Regulations (14 CFR) part 133 Rotorcraft External-Load Operator Certificate.

3-4153 GENERAL.

A. Interaction Between the Applicant and the Federal Aviation Administration (FAA). The certification process details interaction between the applicant and the FAA, from initial inquiry to certificate issuance or denial. It ensures that programs, systems, and intended methods of compliance are thoroughly reviewed, evaluated, and tested.

B. The Certification Process Consists of Five Phases. The five phases are:

- Preapplication.
- Formal Application.
- Document Compliance.
- Demonstration and Inspection.
- Certification.

NOTE: The size and complexity of the part 133 operations will determine how the FAA applies the five phases.

1) In evaluating an applicant for part 133 operations, Airworthiness aviation safety inspectors (ASI) will focus primarily on the Demonstration and Inspection phase.

2) An Airworthiness ASI designated as a certification project manager (CPM) will engage with all phases and closely coordinate all activities with appropriate specialists.

C. Classes of External-Load Authorizations.

1) Operations ASIs approve four classes of external loads. Regardless of class, Airworthiness ASIs will inspect load attaching and quick-release devices in compliance with 14 CFR part 27, § 27.865 or part 29, § 29.865, depending on aircraft category.

UNCONTROLLED COPY WHEN DOWNLOADED
Check with FSIMS to verify current version before using

NOTE: Airworthiness ASIs will conduct a ramp inspection per Volume 6, Chapter 1, Section 4.

2) Class B authorizes the carrying of specific personnel. During Class B operations a portable safety device (PSD) or belly band may be used at the discretion of the operator as a secondary means of attachment. Refer to Information for Operators (InFO) 12015, Classifying and Using a Belly Band System as a Portable Safety Device (PSD) in Part 133 Operations. PSDs are not typically manufactured under an FAA approval process, nor do they require a Supplemental Type Certificate (STC), since they are not permanently installed. PSDs should be evaluated by the operator to ensure:

- PSD material meets the 1983 National Fire Protection Association (NFPA) standard, or equivalent;
- The system includes installation requirements and instructions for continued serviceability;
- There are provisions for a quick release;
- There is an ability to jettison without endangering the aircraft; and
- There is no sudden and/or unacceptable shift in the center of gravity (CG).

3) Class D authorizes the carrying of personnel. Personnel-lifting devices should be approved by FAA Engineering.

D. Rotorcraft External-Load Attaching Means. These attaching means must meet the requirements outlined in part 133, § 133.43(a).

1) While conducting external-load operations, the rotorcraft must have on board a facsimile of an approved Rotorcraft External-Load Operating Certificate using FAA Form 8430-21, Operating Certificate. This document is a valid Airworthiness Certificate while the operator conducts external-load operations, and does not invalidate the Airworthiness Certificate issued at certification. The facsimile, carried in the rotorcraft, is only valid while an external load is attached.

NOTE: Per 14 CFR part 91, § 91.203, operators must display the Standard Airworthiness Certificate issued at certification.

2) Each external-load attaching means must have been approved under:

- Part 8 of the Civil Air Regulations (CAR) on or before January 17, 1964;
- Title 14 CFR part 133, before February 1977;
- Title 14 CFR part 27 or 29, as applicable, regardless of the date of approval;
- Title 14 CFR part 21, § 21.25 of this chapter;
- STC; or
- Major repair and alteration, documented on FAA Form 337, Major Repair and Alteration (Airframe, Powerplant, Propeller, or Appliance).

UNCONTROLLED COPY WHEN DOWNLOADED
Check with FSIMS to verify current version before using

E. Quick-Release Device.

1) Each quick-release device must have been approved under:

- Part 27 or 29 of this chapter, as applicable;
- Part 133, before February 1, 1977; or
- Section 21.25 of this chapter, except the device must comply with § 27.865(b) or § 29.865(b), as applicable, of this chapter.

2) A control for quick release must be installed in accordance with § 27.865 or § 29.865. In addition, a manual mechanical control for the quick-release device must be readily accessible to either the pilot or another crewmember.

3-4154 COORDINATION REQUIREMENTS. This task requires coordination between Airworthiness and Operations ASIs.

3-4155 REFERENCES, FORMS, AND JOB AIDS.

A. References (current editions):

- CAR Part 8.
- Title 14 CFR Parts 21, 27, 29, and 43.
- Advisory Circular (AC) 133-1, Rotorcraft External-Load Operations.
- Volume 3, Chapter 51, Section 5, Evaluate 14 CFR Part 133 Rotorcraft Lease Agreement.
- InFO 12015, Classifying and Using a Belly Band System as a Portable Safety Device (PSD) in Part 133 Operations.

B. Forms:

- FAA Form 337, Major Repair and Alteration (Airframe, Powerplant, Propeller, or Appliance).
- FAA Form 8430-21, Operating Certificate.

C. Job Aids. None.

3-4156 PROCEDURES.

A. Determine if the External-Load Attaching Means Has Been Approved.

1) Examine the aircraft maintenance and alterations records to ensure that the attaching means has been installed using data previously approved by the Administrator. Ensure that the data is either part of the type design of the rotorcraft, or has been added as a supplement to the type design.

2) If the approval is by STC, ensure that the aircraft maintenance records document the approval.

UNCONTROLLED COPY WHEN DOWNLOADED
Check with FSIMS to verify current version before using

3) If the attaching means was approved before February 1, 1977, the load attachment installation may have been installed and approved through the field approval process.

B. Observe a Demonstration. Operators must demonstrate to the Administrator an operational flight check per § 133.41 and structural and design requirements per § 133.43.

C. Ensure Markings and Placards Are Appropriately Displayed. Determine if the external-load attaching means is appropriately placarded for total load. Ensure placards that show limitations about rotorcraft load combination(s) and occupancy are placed in the cockpit in plain view of the pilot.

D. Debrief the CPM. Inform the CPM of any discrepancies found. If the ASI records no discrepancies, the ASI indicates the operator has met airworthiness requirements.

3-4157 TASK OUTCOMES.

A. Complete the PTRS Record.

B. Complete the Task. Successful completion of this task will result in the issuance or denial of an operating certificate by the CPM.

3-4158 FUTURE ACTIVITIES. Observe onsite activities to ensure the operator is complying with applicable regulations.

RESERVED. Paragraphs 3-4159 through 3-4175.

UNCONTROLLED COPY WHEN DOWNLOADED
Check with FSIMS to verify current version before using

VOLUME 3 GENERAL TECHNICAL ADMINISTRATION

CHAPTER 51 PART 133 EXTERNAL LOAD OPERATIONS

Section 6 Evaluate a Part 133 Congested Area Plan

3-4201 PROGRAM TRACKING AND REPORTING SUBSYSTEM (PTRS) ACTIVITY CODE. 1332.

3-4202 OBJECTIVE. Determine if a congested area plan (CAP) meets all regulatory and safety requirements. Successful completion of this task results in either approval or disapproval of a CAP.

3-4203 GENERAL.

A. Authority. Title 14 of the Code of Federal Regulations (14 CFR) part 133, § 133.33(d) permits an operator to conduct external-load operations over congested areas provided the operator does so without creating undue hazard to persons or property. Any rotorcraft used in congested areas requires type certification under 14 CFR part 27 or 29. Conduct each flight on a route and at an altitude that will allow release of a jettisonable load and safe landing of the helicopter if an emergency arises. Section 133.33(d)(1) requires the operator to develop a plan for each operation in a congested area. The Flight Standards District Office (FSDO) that has jurisdiction over the Area of Operation must approve the plan and coordinate as necessary with the certificate-holding district office (CHDO).

B. Background. The Federal Aviation Administration (FAA) has determined that external-load operations are in the public interest and do not inherently pose an undue risk to the public. Risk management (RM) procedures such as a CAP and frequent surveillance help prevent hazards. Section 133.33(d)(1) describes the information that must be included in a CAP.

C. Definitions. For the purpose of operations conducted under part 133, the following definitions apply:

1) Appropriate Political Subdivision. Describes local officials who may exercise the authority to exclude persons and property from an area. These officials include the county sheriff, city police department, highway patrol, fire department, or security guards acting for the political subdivision. In many cases, local police will monitor an external-load operation but will require the operator to supply sufficient personnel to exclude persons and property from the lift area.

2) Congested Area Plan (CAP). An RM document used to show that the risk associated with an external-load operation will not create undue hazards to property and the nonparticipating public because of certain, specific procedures used by the operator during the operation.

3) Congested Areas Versus Densely Populated Areas. These two terms are used in reference to rotorcraft external-load operations. Although the terms describe similar areas, the

UNCONTROLLED COPY WHEN DOWNLOADED
Check with FSIMS to verify current version before using

meanings are different. The regulations require preparation of a CAP for congested areas. A CAP is also needed for densely populated areas. In addition, an uncongested, sparsely populated area may need a CAP because the area may quickly become congested with persons watching an external-load operation.

a) Congested Area. The congested nature of an area is defined by what exists on the surface, not the size of the area. While the presence of the nonparticipating public is the most important determination of "congested," the area may also be congested with structures or objects. An area considered congested for airplane operations could be equally congested for helicopters. If an airplane flying over a congested area at less than 1,000 feet above ground level (AGL) is in violation of 14 CFR part 91, § 91.119(b), the area may also be a congested area for a helicopter conducting external-load operations. However, the most important word in this concept is "over." Helicopters can operate over relatively small uncongested areas because of their maneuvering abilities.

b) Densely Populated Area. Sections 91.313 and 133.45(d) use the term "densely populated" area. Those areas of a city, town, or settlement that contain a large number of occupied homes, factories, stores, schools, and other structures are considered densely populated. Additionally, a densely populated area may not contain any buildings but could consist of a large gathering of persons on a beach, at an airshow, at a ball game, or at a fairground.

NOTE: While the presence of the nonparticipating public is the most important determination of congested, this definition also applies to structures, buildings and personal property. The congested nature of an area is defined by what exists on the surface, not the size of the area.

4) Contractor. The person, corporation, or entity who hired an operator to conduct the external-load operation.

5) Emergency Landing Site. Section 133.33(d)(2) requires the rotorcraft to be at an altitude that allows landing in an emergency without hazard to persons or property on the surface. There is no requirement that the emergency landing occur without damage to the rotorcraft. An emergency landing site does not have to be an improved surface. Examples of emergency landing sites are the parking lot at the pickup site and a rooftop at the set site.

6) Operational Area. An area unoccupied on the surface by the nonparticipating public. The operational area is not part of the operation, but persons within this area could sustain injuries, or property could sustain damage, by the external load or by the attaching means (e.g., load, cables, or hooks).

7) Special Congested Area Plan (SCAP). A CAP to facilitate support of local or national emergency prevention plans. The intent of these plans is to ensure timely equipment delivery to sites, thereby preventing uncontrolled events. An example would be CAPs submitted by operators supporting contractors in the nuclear power industry's Strategic Alliance for FLEX Emergency Response (SAFER) team.

UNCONTROLLED COPY WHEN DOWNLOADED
Check with FSIMS to verify current version before using

8) Without Hazard. This means to operate without undue hazard beyond the risk posed by other rotorcraft operations to nonparticipating public or property. Protect the nonparticipating public from all the potential hazards associated with external-load operations. Protect property as much as possible. Potential hazard to property alone should not preclude conducting an external-load operation in accordance with a CAP.

D. Restricted Category Rotorcraft. Part 133 provides that a rotorcraft external-load operator may conduct operations over congested areas only in a rotorcraft type-certificated (TC) under and meeting the requirements of parts 27 and 29 (normal and transport category rotorcraft).

1) Restricted category rotorcraft certificated in accordance with 14 CFR part 21 do not necessarily meet airworthiness requirements for parts 27 and 29. Therefore, in order to maintain an equivalent level of safety, operators must not use restricted category rotorcraft in the following external-load operations:

a) Over a densely populated area.

b) In congested airways or near a busy airport conducting passenger transport operations. An external-load operator using restricted category rotorcraft near a busy airport must show that adequate procedures exist to ensure that no external-load operation occurs when passenger transport operations are in progress. (An external-load operation conducted within Class D airspace could be considered near a busy airport under § 133.45(d).) Advise the operator that advance coordination is required with the air traffic control (ATC) facility that has jurisdiction over the airport.

2) Section 91.313(e) prohibits any operation of aircraft certificated under part 21, § 21.25 from operating over densely populated areas, on a congested airway, or near airports conducting passenger transport operations. The Administrator may issue operating limitations to permit such operations or the geographically responsible FSDO may issue a waiver to the rule in accordance with § 91.905. Section 91.313(e) does not apply to operations conducted under part 133 (refer to § 133.45(d)); however, it may apply to ferry or repositioning flights performed by part 133 operators.

3) If there is verification that the external-load lift site is an uncongested area, or can become an uncongested area, a restricted category helicopter may conduct an external-load operation. However, a contingency plan (not a CAP) may be necessary to determine that the operator has considered areas for load jettisoning, emergency landings, ingress and egress routes, and means for maintaining a sterile area. This last item is most important since the mere presence of a helicopter conducting an external-load operation is likely to draw spectators and other unnecessary personnel to the scene, to the extent that the area may become congested.

E. Evaluation of the CAP. The FSDO that has jurisdiction over the area of operation must approve the certificate holder's plan for each operation. Notify and coordinate with the CHDO for the operator as necessary when approving a new CAP. A separate plan is not necessary for each flight. One plan may suffice for an operation that requires several flights or

UNCONTROLLED COPY WHEN DOWNLOADED
Check with FSIMS to verify current version before using

even days to complete, as long as the operation area does not change. Plans vary widely and the inspector must consider all situations that may arise.

F. Qualifications of the Inspector Evaluating the Plan. Whenever possible, an inspector with experience as an external-load helicopter pilot should review CAPs. If a FSDO does not have an inspector with this experience, the office manager will designate the best-qualified Operations inspector.

G. The Concept of RM in External-Load Operations. It is unreasonable to expect the plan or the inspector to foresee every unlikely eventuality, including crash forces or scatter patterns. A helicopter crash that occurs during a low-speed, low-altitude external-load operation may produce less crash force than another helicopter without an external-load that hits with 120 knots forward speed. Consequently, both the operator and the inspector must weigh all the alternatives and carefully make decisions that would not unduly restrict external-load operations that are clearly in the public interest. The operator is responsible for developing a plan that minimizes manageable risk.

1) Use rotorcraft identification to verify that a particular helicopter is on the list of authorized rotorcraft (letter of authorization (LOA) A003).

2) Use identification of rotorcraft airworthiness category to determine whether the operator plans to use restricted category helicopters. Determine if the area of the proposed operation is a congested area. (See subparagraph 3-4203C3)a).)

3) Include the dates and times of the proposed operation. This enables the inspector to evaluate the exclusion of unauthorized persons from the operational area by local authorities or the operator. It also provides the inspector with the opportunity to schedule surveillance during the operation. If the plan is a SCAP, the operator may submit the dates and times as “to be determined (TBD)” due to the inability to predict the date and time of a potential event. The SCAP approval letter must specify that the approval is for 12 calendar-months and the operator must review and validate the SCAP every 12 calendar-months. The operator should submit the annual renewal request (with changes if needed) at least 30 days prior to the SCAP expiration date. All efforts should be made to ensure that the revalidated SCAP is approved prior to the expiration date.

4) Obtain the name, phone number, and title of the official of the local political subdivision, when appropriate.

5) When evaluating the plan, consider the weight, shape, and aerodynamic flight characteristics of the load.

6) Obtain the proposed length of cable to determine if the plan provides for an adequate operational area.

7) The operator should estimate how many floors the load, with attaching means, could penetrate if dropped from the highest point lifted above the building. Take into account the type of roof construction and the size, shape, and weight of the load. The plan should require that one additional floor beyond those estimated to be penetrable be unoccupied. On a tiered building,

UNCONTROLLED COPY WHEN DOWNLOADED
Check with FSIMS to verify current version before using

the height of load lift above each tier determines the number of floors in the respective tiers that must be unoccupied (see Figure 3-135, Height of Load Above Building).

8) The inspector should obtain phone numbers to contact the building owner and/or manager for verification that the building will actually be unoccupied during the operation. This includes after-hours personnel such as building maintenance workers.

9) Aeronautical charts alone often do not provide sufficient detail for depicting routes and altitudes over a congested area. City maps or even hand-drawn charts may be necessary. Draw charts to approximate scale. Topographical maps, charts, and aerial photographs should be as current as possible to assure an accurate representation of the area.

10) When available, photographs of the lift site, set site, and surrounding areas can also be an asset to the inspector. If the CAP is in an area unfamiliar to the inspector, the addition of these photographs can greatly reduce the amount of time needed to approve the CAP.

NOTE: Each external-load operation is unique. The risk to the nonparticipating public dictates operational area requirements. Emphasize that the following criteria are guidelines and the inspector may exceed or reduce them as appropriate.

H. Method 1: Normal Loads. For non-aerodynamic loads, such as air conditioning units and flagpoles flown below effective translational lift (ETL), the radius of the operational area should be at least 1.5 times the overall length (including rotor discs) of the helicopter used, or the length of the external-load including the attaching means (e.g., cable), whichever is greater (see Figure 3-136, Non-Aerodynamic Load Operational Area—Forward Distance Below Effective Translational Lift). When operating along a route above ETL, the operational area should extend at least 45 degrees in front of the rotorcraft. For example, if the rotorcraft (not load) operates at 300 feet above the surface, the operational area should extend at least 300 feet in front of the rotorcraft. The forward radius should extend at least three times the overall length of the helicopter (see Figure 3-137, Non-Aerodynamic Load Operational Area—Forward Distance Above Effective Translational Lift).

I. Method 2: Aerodynamically Shaped Loads. For aerodynamic loads, use whichever is greater: Method 1 or Method 2. In Method 2, the criterion applied to aerodynamic loads provides for about 45 degrees of drift after load release. For a load lifted 200 feet high, the operational area radius should be 200 feet. Use the method of calculation that provides for the greatest operational area. For example, a helicopter that transports an aerodynamically shaped load along a congested area route will require a wider operational area the higher above the surface the load is lifted. Conversely, operating the rotorcraft at a higher altitude provides more options for landing in an emergency. Generally, the plan should provide for operating the rotorcraft at an altitude high enough to permit landing in an emergency, but hold the load low enough to ensure that the external load will land within the operational area if released (see Figure 3-138, Aerodynamic Load Operational Area—Radius and Forward Distance Computation Above Effective Translational Lift).

UNCONTROLLED COPY WHEN DOWNLOADED
Check with FSIMS to verify current version before using

J. Conditions of Approval. You may find it necessary to specify conditions of approval for a plan. You may base these contingencies on your experience monitoring similar plans or experience with this operator. You may approve the plan in principle, provided the operator complies with the written contingencies noted on the plan. For a SCAP, a condition for approval will require the operator to notify the FSDO and CHDO of the dates and times of the lift, as well as providing an updated pilot and aircraft list to be used (if different from the original SCAP submitted).

K. Coordination With Appropriate Officials. Local officials should exclude unauthorized persons from the site if open to the public. In some cases, local officials may delegate this task to the operator, who is ultimately responsible for site security.

L. Subcontracting Work or Equipment: Responsibility for the CAP. A situation may arise when an external-load operator contracts with another external-load operator for a specific operation. For example, operator A's helicopter can lift only a certain weight that is less than the weight of the load to be lifted. Operator B has a large helicopter that can lift the load. In this case, operator B would have to submit the CAP because operator B is actually performing the work. If operator A wishes to conduct the external-load operation using operator B's helicopter, operator A must meet all certification requirements appropriate to adding operator B's helicopter to operator A's list of authorized rotorcraft.

M. Site Inspection. Unless the inspector has a current working knowledge of the site/route, or the operator can supply photographs of sufficient detail, make an onsite survey.

N. CAP Alternatives. The CAP submitted by the operator should contain alternative plans for as many variables as possible. With approved alternatives, the operator may not need to postpone the operation to seek FAA approval if the plan needs modification. If the plan is a SCAP, the operator should submit details as though the lift were being conducted with known dates.

3-4204 MONITORING A CAP. Monitor each CAP operation if practicable. However, an ongoing daily operation may not require continuous monitoring. An operator unfamiliar to the FSDO or an operator working over a congested area for the first time should require an inspector's presence for the duration of the operation. If the inspector observes an imminent violation, the inspector should attempt to advise the operator to cease operations until he or she can correct the situation (see Volume 6, Chapter 5, Section 3).

UNCONTROLLED COPY WHEN DOWNLOADED
Check with FSIMS to verify current version before using

Figure 3-135. Height of Load Above Building

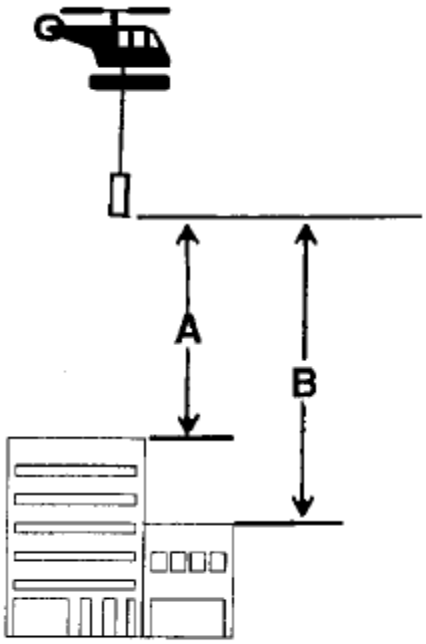

A = The maximum height that the load will be lifted above the top of the building must be specified in the plan if the building will be occupied during the operation.

B = The maximum height that the load will be lifted above the lower tier (if applicable) must also be specified if this portion of the building will be occupied during the operation.

UNCONTROLLED COPY WHEN DOWNLOADED
Check with FSIMS to verify current version before using

Figure 3-136. Non-Aerodynamic Load Operational Area—Forward Distance Below Effective Translational Lift

RADIUS

Use the greater of: a) 1.5 times the overall length of helicopter

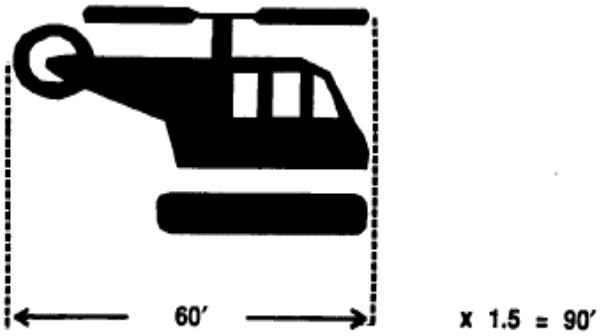

b) Overall length of load (including cable)

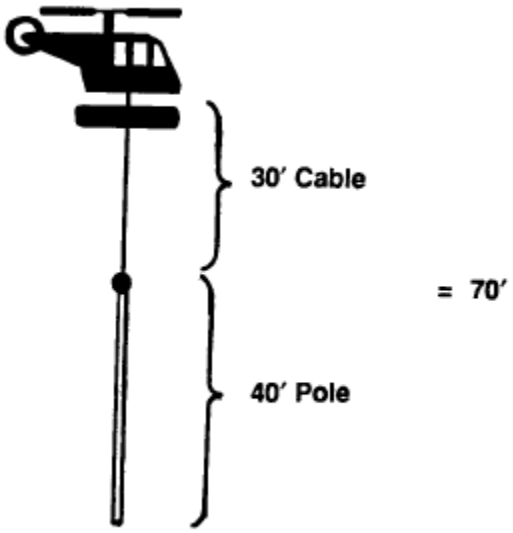

UNCONTROLLED COPY WHEN DOWNLOADED
Check with FSIMS to verify current version before using

Figure 3-137. Non-Aerodynamic Load Operational Area—Forward Distance Above Effective Translational Lift

Minimum of: (But not less than 3 times overall length)

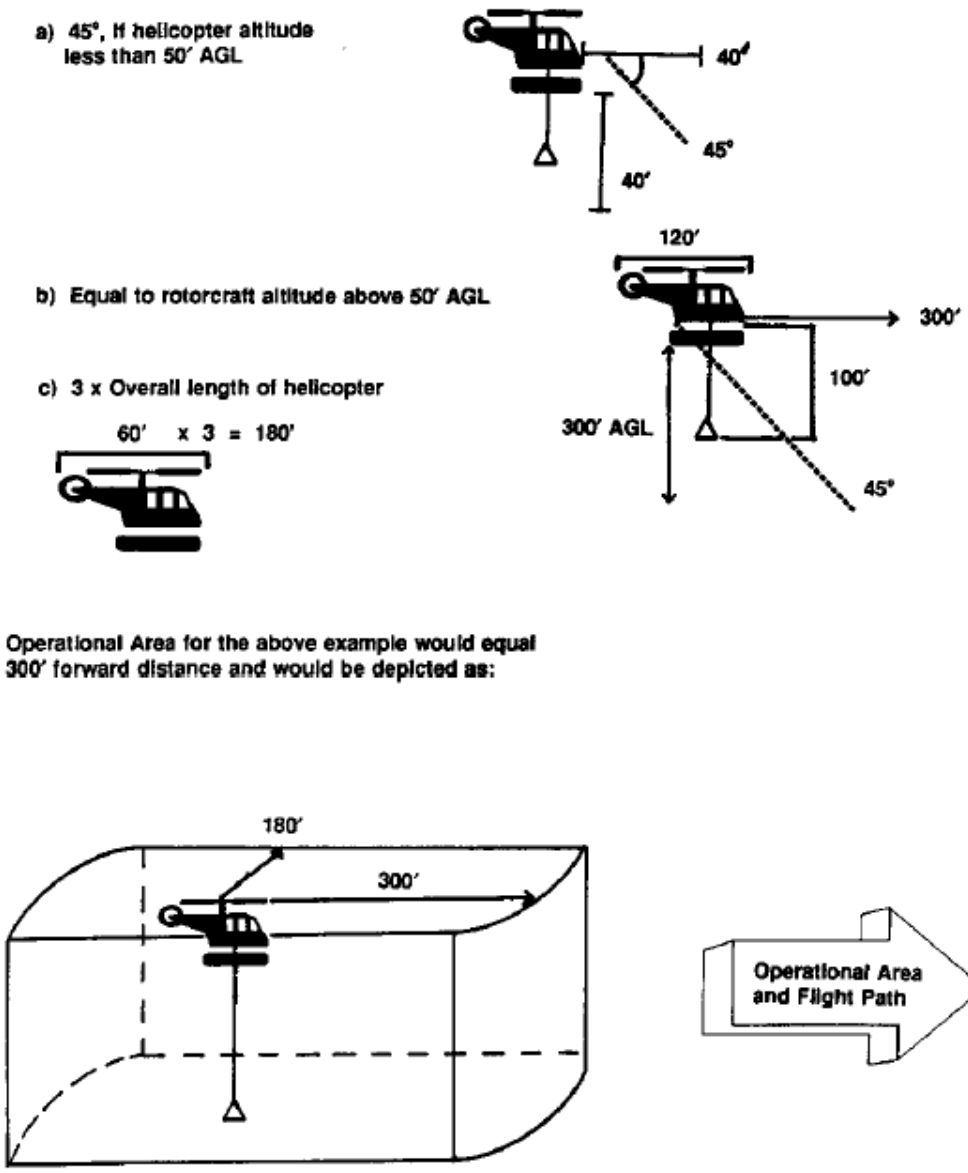

UNCONTROLLED COPY WHEN DOWNLOADED
Check with FSIMS to verify current version before using

Figure 3-138. Aerodynamic Load Operational Area—Radius and Forward Distance Computation Above Effective Translational Lift

Use the greater of:

a) Non-aerodynamic load criterion,

OR

b) Altitude above ground level (AGL) of aerodynamic external-load.

Using the same method from the non-aerodynamic load example in Figure 3-137 and adding the following aerodynamic load, the operational area becomes:

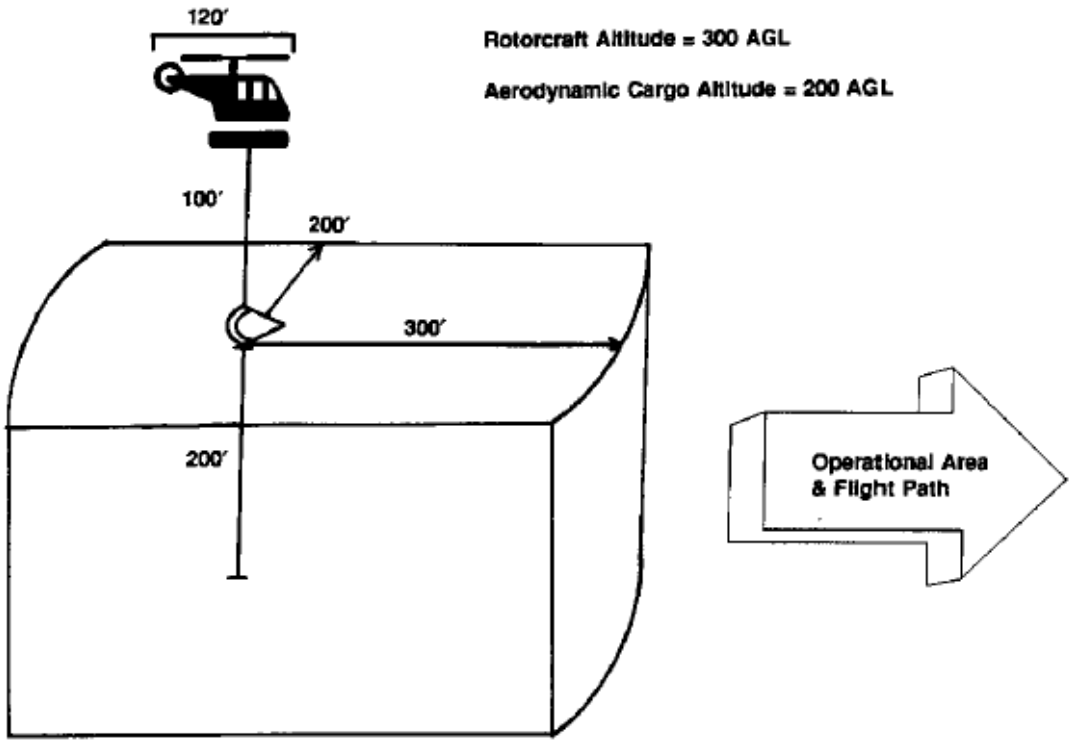

UNCONTROLLED COPY WHEN DOWNLOADED
Check with FSIMS to verify current version before using

Figure 3-139. Operational Area Around Building and Emergency Landing Site

R = 1.5 times the overall length (OL) of helicopter, including rotor blades

PU = pickup site

DS = delivery site

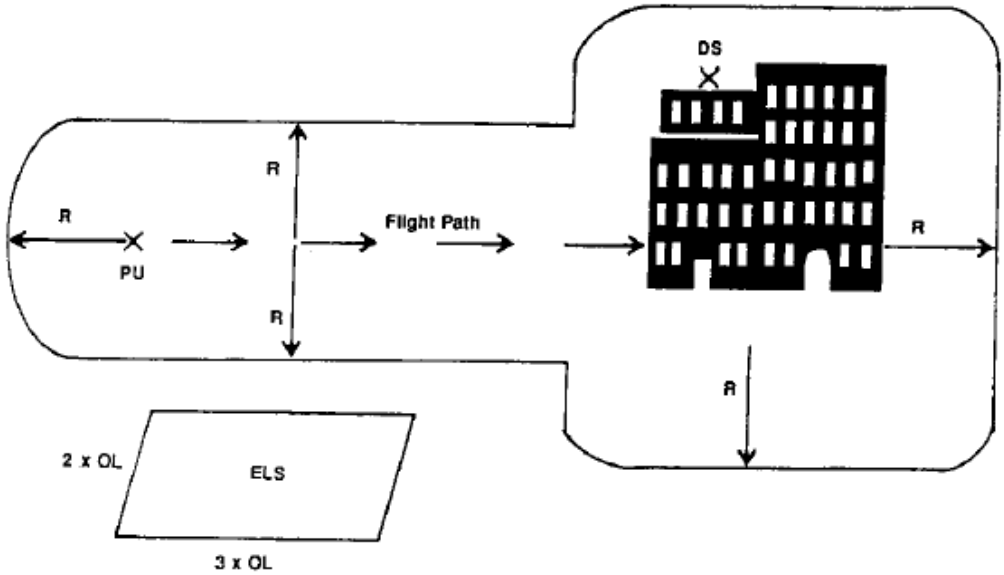

3-4205 PREREQUISITES AND COORDINATION REQUIREMENTS.

A. Prerequisites. This task requires knowledge of the regulatory requirements of part 133 and FAA policies, and qualification as an aviation safety inspector (ASI) (Operations) with knowledge of external-load operations. If a FSDO does not have an inspector with this experience, the office manager will designate the best qualified Operations inspector.

B. Coordination. This task requires coordination with the local officials and possibly with the operator's CHDO.

3-4206 REFERENCES, FORMS, AND JOB AIDS.

A. References (current editions):

- Title 14 CFR Parts 1, 21, 27, 29, 61, 91, and 133.
- Advisory Circular (AC) 133-1, Rotorcraft External-Load Operations.
- PTRS Procedures Manual (PPM).

B. Forms. None.

UNCONTROLLED COPY WHEN DOWNLOADED
Check with FSIMS to verify current version before using

C. Job Aids:

- Sample CAP.
- Tape recorder and camera equipment.
- Sample letters and figures.

3-4207 PROCEDURES.

A. Initial Inquiry. Upon inquiry, give the applicant a sample CAP or explain what the plan must include. For a SCAP, explain that the operator should submit details as though the lift were being conducted with known dates.

B. PTRS. Open the PTRS record.

C. Review Submitted Plan. An acceptable plan must include (but not be limited to) the following information:

1) The name, address, and phone number of the operator;

2) The name, address, and phone number of the contractor;

3) The identification number of the rotorcraft (N-number);

4) The type of rotorcraft (make and model (M/M)) to be used and the rotorcraft airworthiness category (Normal, Restricted, or Transport);

5) The names of pilots involved in the congested area operation;

6) The number of loads to be carried;

7) A description of the loads to be carried, including the weight of each load;

8) The date the operation begins, the dates of all flights, and the date the operation ends;

9) The name and phone number of the person contacted at the police, sheriff, and/or fire departments;

10) The signature of person responsible for the company (usually the chief pilot);

11) The date of submission;

12) A copy of the written agreement with local officials for the exclusion of unauthorized persons, or the name and telephone number of the official if responsibility is delegated to the operator;

13) A record of coordination with ATC (if applicable);

14) A detailed chart depicting flight routes and altitudes;

UNCONTROLLED COPY WHEN DOWNLOADED
Check with FSIMS to verify current version before using

15) A diagram and narrative defining operational areas, pickup sites, delivery site, streets to be blocked and to be unoccupied by persons, and location of obstructions in the operating area;

16) A procedure for ceasing operation if a potential or real hazard occurs;

17) A list of all buildings to be unoccupied by persons during the lift;

18) A list of buildings within the operational area that will be occupied by persons, as well as number of floors that may be occupied;

19) An estimate of how many floors of the building would be penetrated if the load is released at the maximum height it will be lifted above the roof, if appropriate. The plan should provide the inspector with assurance that the load will penetrate no more than the number of floors specified in the plan;

20) An estimate of how long the external-load attaching means will be, such as the length of the cable; and

21) The designation of emergency landing areas at the delivery and pickup sites.

D. Verify Plan. Ensure that the operator has checked with the local political subdivisions to verify that they agreed to provide security for the area and that they thoroughly understand the nature and implications of the plan.

E. Review Files. Review office files or coordinate with the CHDO in order to review the current operating certificate to determine the class of authorization.

F. Site Inspection.

1) Verify that the operational areas, including emergency landing sites, are adequate as described in the plan.

2) Travel the actual route to verify safe load jettison and rotorcraft landing in an emergency.

3) Note any discrepancies or conditions of approval.

G. Plan Satisfactory. When the operator meets all requirements for the plan, approve it by stamping, dating, and signing each page. Make a copy of the plan for the FSDO files.

H. Plan Satisfactory With the Addition of Provisions. When the operator meets all requirements, but safety demands further requirements, approve the plan with provisions specified in writing (Figure 3-140, Letter Approving Congested Area Plan With Provisions). Make a copy of the plan and the provisions for the file.

UNCONTROLLED COPY WHEN DOWNLOADED
Check with FSIMS to verify current version before using

I. Plan Unsatisfactory. Advise the operator that the plan is unsatisfactory and explain what the deficient areas are.

1) Discuss whether to return the plan or whether the operator will amend the plan.

2) Review the resubmitted plan and reinspect the site as necessary.

J. Close the PTRS Record.

3-4208 TASK OUTCOMES. Completion of this task results in either:

- A record in the file indicating an approved CAP, with or without provisions; or
- A letter to the operator outlining areas of deficiency in a CAP.

3-4209 FUTURE ACTIVITIES. Monitor the congested area operation to ensure compliance with the approved plan.

Figure 3-140. Letter Approving Congested Area Plan With Provisions

FAA Letterhead

[Date]

[Name and address of the operator]

Dear [Name of the operator]:

We confirm the approval of the Congested Area Plan (CAP) submitted by you on [date].

This approval concerns the proposed operation at [site location] on [date(s)], and is contingent on [cite contingencies as appropriate]. Inspectors from this office will monitor the operation to ensure compliance with the approved plan.

Should you have any questions or need to submit a change to this plan, please contact this office at [FSDO telephone number].

Sincerely,

[Principal operations inspector's (POI) signature]

UNCONTROLLED COPY WHEN DOWNLOADED
Check with FSIMS to verify current version before using

Figure 3-140A. Letter Approving a Special Congested Area Plan With Provisions

FAA Letterhead

[Date]

[Name and address of the operator]

Dear [Name of the operator]:

We confirm the approval of the Special Congested Area Plan (SCAP) submitted by you for the [name of power station or lift location].

This approval concerns the proposed operation, as described in your plan, of a 14 CFR part 133 External-Load Operation to transport equipment from the [pickup location] to the [delivery location]. Compliance with the enclosed approved SCAP and the following provisions apply: (*include at least the following provisions*)

1) This SCAP is effective for 12 calendar-months from the date of this letter.

2) [Name of the operator] must review this SCAP every 12 calendar-months and submit a written update or revalidation to this FSDO (courtesy copy to the CHDO).

3) Prior to the start of operations in accordance with this SCAP [Name of the operator] must notify this FSDO (courtesy copy to the CHDO) of the dates and times of the lift as well as provide an updated pilot and aircraft list to be used (if different form the original SCAP submitted).

4) This approval does not authorize operations within any Special Use Airspace (SUA) (e.g., prohibited or restricted) nor does it waive any regulations.

Should you have any questions or need to submit a change to this plan, please contact this office at [FSDO telephone number].

Sincerely,

[Principal operations inspector's (POI) signature]

RESERVED. Paragraphs 3-4210 through 3-4211.

UNCONTROLLED COPY WHEN DOWNLOADED
Check with FSIMS to verify current version before using

VOLUME 3 GENERAL TECHNICAL ADMINISTRATION

CHAPTER 57 MAINTENANCE REQUIREMENTS FOR HIGH-PRESSURE CYLINDERS INSTALLED IN U.S.-REGISTERED AIRCRAFT CERTIFICATED IN ANY CATEGORY

Section 1 Safety Assurance System: Maintenance Requirements for High-Pressure Cylinders

3-4544 REPORTING SYSTEM(S).

A. Program Tracking and Reporting Subsystem (PTRS). For Title 14 of the Code of Federal Regulations (14 CFR) parts 91, 125, 129, 133, and 137, use PTRS activity codes: 3694, 3341, 3351, 5694, 5341, and 5351.

B. Safety Assurance System (SAS). For 14 CFR parts 121 and 135, use SAS Automation. This section relates to SAS Elements 4.4.4 (AW), Aircraft Acceptance Process and 4.2.2 (AW), Maintenance/Inspection Schedule.

3-4545 OBJECTIVE. This section provides guidance for the maintenance requirements of high-pressure cylinders installed in all U.S.-registered aircraft regardless of how the aircraft is operated.

3-4546 GENERAL. The regulatory requirements to maintain, store, and handle aircraft high-pressure cylinders that contain hazardous materials (hazmat) have been a source of misunderstanding within the Federal Aviation Administration (FAA) community. This section will provide information and guidance for the maintenance requirements of high-pressure cylinders installed in U.S.-registered aircraft. This section will also explain the applicability of cylinder requalification requirements for high-pressure cylinders contained in Title 49 of the Code of Federal Regulations (49 CFR) subtitle B, chapter I, subchapter C, Hazardous Materials Regulations.

A. Requirements. There are unique aspects to consider in the FAA maintenance requirements related to high-pressure cylinders installed in an aircraft and different Department of Transportation (DOT) maintenance requirements when the cylinders are not installed in an aircraft.

1) Each high-pressure cylinder installed on a U.S.-registered aircraft must be a cylinder that was manufactured and approved under the DOT requirements of 49 CFR or under a "special permit" issued by the Pipeline and Hazardous Materials Safety Administration (PHMSA) under 49 CFR part 107. There are no exceptions.

2) Each high-pressure cylinder installed or offered for installation with intent to transport on a U.S.-registered aircraft is considered to be an aircraft part and is regulated under the maintenance requirements of 14 CFR appropriate to the type of aircraft and type of operation. In this case, 14 CFR restricts cylinder maintenance to removal, installation, servicing, and inspections (service life and requalification date checks, pressure and weight checks,

UNCONTROLLED COPY WHEN DOWNLOADED
Check with FSIMS to verify current version before using

serviceability/damage inspections, etc.). Cylinder repairs and requalifications are accomplished under the requirements of 49 CFR.

3) Each high-pressure cylinder that has been removed from a U.S.-registered aircraft and not otherwise intended to be re-installed is not considered to be an aircraft part. For the purpose of overhaul, repair, and testing of the cylinder, such as hydrostatic testing, Title 29 of the Code of Federal Regulations (29 CFR) and 49 CFR, not 14 CFR, regulate the continued serviceability requirement.

4) Each high-pressure cylinder installed in a U.S.-registered aircraft may remain installed past the time when its 49 CFR-required requalification is due, provided the cylinder is not removed from the aircraft. A cylinder that is past the date when its 49 CFR-required requalification is due may not be installed, serviced, or refilled until it has been requalified by a person authorized under the appropriate provisions of 49 CFR.

5) A high-pressure cylinder installed in a U.S.-registered aircraft may not remain installed past the airframe or cylinder manufacturer's service life limit date.

B. Focus of the HMR. The HMR provides instructions for the safe transportation of hazmat in all modes of transportation, not aircraft maintenance. The HMR does not have provisions for maintenance of aircraft parts.

C. Hazmat Table. Title 49 CFR part 172, § 172.101 contains descriptions of the hazmat's proper shipping names and other references for the safe transportation of hazmat.

3-4547 BACKGROUND.

A. Previous Events. There have been events involving high-pressure oxygen cylinders. Most of these events have not involved the structural integrity of the cylinders, but have involved fires attributed to servicing the pressure cylinder while the cylinder was still installed aboard the aircraft. There have also been instances where cylinders that have not been properly approved under 49 CFR have been installed in U.S.-registered aircraft. Many of these events have been attributed to the absence of scheduled maintenance requirements and adequate maintenance procedures.

B. Regulatory Requirements. High-pressure cylinders containing hazmat and used as aircraft equipment are subject to regulations in four different areas of the CFR that are administered by four separate regulatory agencies. These areas are as follows:

1) As discussed above, the HMR is codified in 49 CFR. The HMR is broad in scope and covers all of the elements related to the safe transport of hazmat by any means, including the qualification, maintenance, and use of hazmat packaging or containers. Hazmat sent using commercial transportation and/or other methods must comply with the HMR. These regulations apply to those who offer, accept, or carry hazmat to, from, within, and across the United States. PHMSA promulgates and administers these regulations.

a) PHMSA has delegated administration, surveillance, and enforcement of those specific parts of the HMR related to the transportation of hazmat by air to the FAA's Office of

UNCONTROLLED COPY WHEN DOWNLOADED
Check with FSIMS to verify current version before using

Security and Hazardous Materials Safety (ASH). For more information, refer to http://www.faa.gov/about/office_org/headquarters_offices/ash/ash_offices.

b) PHMSA has retained administration, surveillance, and enforcement of those parts of the HMR related to the qualification, requalification, maintenance, and use of high-pressure cylinders.

2) Title 29 CFR codifies other regulations regarding the safe handling of hazmat when it is not being offered, accepted, or carried with the intention of transporting hazmat. The Occupational Safety and Health Administration (OSHA) promulgates and administers these regulations.

3) Title 14 CFR contains regulations specific to hazmat training, which relate to the transportation of hazmat by air. There are no specific 14 CFR regulations that deal with the maintenance of pressure cylinders that contain hazmat.

4) The Environmental Protection Agency (EPA) is another agency that becomes involved if the hazmat receives a waste classification. The EPA promulgates and enforces regulations related to mitigating or eliminating the effects of hazmat on the environment. Title 40 of the Code of Federal Regulations (40 CFR) contains these regulations. A few examples of aircraft hazardous waste are expended or expired chemical oxygen generators, oils, fuels, and/or other fluids.

3-4548 HIGH-PRESSURE CYLINDER MAINTENANCE.

A. Installed Pressure Cylinder Maintenance. Title 14 CFR maintenance requirements appropriate to the type of aircraft and operation regulate pressure cylinders installed on a U.S.-registered aircraft. In any case, the maintenance that a provider may accomplish while the cylinder is installed in the aircraft is restricted to the replacement, servicing, or inspection of those cylinders. This is consistent with the meaning of the term “maintenance” in 14 CFR part 1, § 1.1. This is also consistent with 49 CFR part 175, § 175.8, which states that pressure cylinders installed in a U.S.-registered aircraft are not subject to the HMR. This exception only applies when the aircraft has a cylinder installed.

B. Removed Pressure Cylinder Maintenance.

1) Pressure cylinders removed from U.S.-registered aircraft which are being stored, handled, or otherwise moved without the intention of transport come under the appropriate requirements of 29 CFR, Labor. Refer to 29 CFR Part 1910, Occupational Safety and Health Standards, for additional information.

2) Title 49 CFR regulates pressure cylinders removed from U.S.-registered aircraft and requires testing of the cylinders for requalification under the requirements of 49 CFR. Title 49 CFR requires these cylinders to be requalified on a calendar-time basis. Requirements specific to a cylinder may be found in 49 CFR part 180, §§ 180.3, 180.205, and 180.209, and other CFR parts. The 49 CFR cylinder requalification process contains specific requirements, including a hydrostatic test. However, a hydrostatic test alone does not satisfy the 49 CFR cylinder requalification requirements.

UNCONTROLLED COPY WHEN DOWNLOADED
Check with FSIMS to verify current version before using

3) Maintenance providers may not install cylinders in a U.S.-registered aircraft certificated in any category if the cylinders are not approved, qualified, and/or requalified under 49 CFR.

3-4549 PROCEDURES.

A. High-Pressure Cylinders Maintenance Program Requirement. Each operator of a U.S.-registered aircraft must have maintenance and recordkeeping procedures consistent with its particular regulatory requirements for each high-pressure cylinder installed on the aircraft.

1) Operators should develop procedures to ensure that maintenance providers do not fill or service these cylinders after they have reached the time when the 49 CFR requalification requirements are due.

2) The maintenance program will include pre-installation instructions to inspect the cylinders prior to aircraft installation for serviceability. Maintenance personnel must reject damaged cylinders for installation per 49 CFR, as this affects cylinder integrity to retain high pressure, which would impose a hazard.

3) Title 49 CFR § 180.205(c) provides that a cylinder may be requalified at any time during or before the month and year that the requalification is due.

4) A cylinder filled and installed in the aircraft before the requalification becomes due may remain in service until the cylinder is removed from the aircraft.

5) A cylinder may not remain in service beyond the life limits established by the airframe or cylinder manufacturer.

6) A cylinder with a specified service life may not be refilled and offered for transportation after its authorized service life has expired.

NOTE: Title 14 CFR provides for the continued airworthiness of the high-pressure cylinders through the maintenance instructions provided by the manufacturer of the aircraft. Those instructions will often refer to an accessory, instrument, or equipment manufacturer as the source of this information if the applicant shows that the item has an exceptionally high degree of complexity requiring specialized maintenance techniques, test equipment, or expertise.

B. High-Pressure Cylinders Not DOT-Qualified Under 49 CFR. All high-pressure cylinders will meet the requirements and certification standards of 49 CFR. Those cylinders not meeting those standards must not be installed on aircraft and must be replaced if installed.

UNCONTROLLED COPY WHEN DOWNLOADED
Check with FSIMS to verify current version before using

C. High-Pressure Cylinders Not DOT-Qualified Under 49 CFR and Operator Noncompliance.

1) Since Flight Standards Service does not enforce the HMR, contact the enforcement section of the PHMSA Regional Office (RO) that covers the location.

2) For PHMSA ROs, refer to http://www.phmsa.dot.gov/about-phmsa/offices.

3-4550 FUTURE ACTIVITIES. None.

RESERVED. Paragraphs 3-4551 through 3-4563.

UNCONTROLLED COPY WHEN DOWNLOADED
Check with FSIMS to verify current version before using

VOLUME 5 AIRMAN CERTIFICATION

CHAPTER 1 DIRECTION, GUIDANCE, AND PROCEDURES FOR TITLE 14 CFR PARTS 121/135 AND GENERAL AVIATION

Section 6 Issuance of Notices of Disapproval of Application

5-131 GENERAL. This section provides general guidance on preparing and issuing Federal Aviation Administration (FAA) Form 8060-5, Notice of Disapproval of Application (see Figure 5-14). Inspectors should refer to specific tasks within Volume 5 for detailed information on the limitations that appear on FAA Form 8060-5. The Integrated Airman Certification and Rating Application (IACRA) system should be used when appropriate.

5-132 NOTICE OF DISAPPROVAL OF APPLICATION. If an applicant's performance is unsatisfactory in the demonstration of knowledge, skill, or both areas, the practical test should be terminated and the applicant informed of the reasons for the termination. The knowledge and skill demonstrations cannot be considered as separate entities. If either aspect is considered unsatisfactory, the applicant has failed the entire practical test. However, the inspector may give credit for those areas of operations and tasks that were passed. The inspector should complete the information in the appropriate sections of FAA Form 8710-1, Airman Certificate and/or Rating Application, and prepare FAA Form 8060-5 in duplicate.

D. Preparation of FAA Form 8060-5. Sections of FAA Form 8060-5 are not numbered, but with reference to Figure 5-14, these instructions can be followed.

1) Enter the name and address of the applicant as they appear on the application.

2) Indicate the certificate or rating sought during the practical test.

3) Check the "Practical" box if there were unsatisfactory items on either the knowledge or skill portions.

4) Record the aircraft used for the test and the flight time in that aircraft as indicated in the applicant's logbook. The time is categorized as pilot-in-command (PIC) or solo, instrument, and dual.

5) Indicate on FAA Form 8060-5 the areas of operation and tasks that were unsatisfactorily performed on the practical test, and indicate those operations not performed during the practical test.

a) All required areas of operation and tasks that the applicant was evaluated to perform unsatisfactorily must be listed on FAA Form 8060-5.

b) List the number of practical test failures by the applicant for this certificate or rating in any available space on FAA Form 8060-5.

UNCONTROLLED COPY WHEN DOWNLOADED
Check with FSIMS to verify current version before using

c) An applicant for retesting may receive credit for those areas of operation and tasks completed satisfactorily on the previous practical test(s). If a task is not completed to standard, the entire area of operation does not need to be rechecked; only the tasks that the applicant did not perform to standard need to be completed during the recheck. An inspector must test the applicant on all areas of operation required for a pilot certificate or rating if 60 calendar-days have elapsed from the date of the initial practical test for the certificate or rating, as appropriate. An inspector may reexamine the applicant on any areas of operation required for a pilot certificate or rating, as appropriate, if the applicant demonstrates unsatisfactory proficiency or competence on a task that was evaluated as satisfactory on a previous practical test.

6) The inspector must date and sign FAA Form 8060-5 and enter the Safety Assurance office designation or number.

E. Disposition of File. If the inspector determines that the applicant has failed the practical test, the inspector issues FAA Form 8060-5 to the applicant and returns the applicant's medical and knowledge test report. Forward the completed FAA Forms 8710-1 and 8060-5 to the Airmen Certification Branch (AFB-720). A copy of FAA Form 8060-5 may be provided to the flight instructor or certificated pilot school involved.

5-133 COMPLETION OF FAA FORM 8000-36, PROGRAM TRACKING AND REPORTING SUBSYSTEM DATA SHEET. Inspectors and examiners who conduct airman certification shall complete FAA Form 8000-36 for each activity conducted (see Figure 5-15). Safety Assurance office managers may have the data sheets overprinted and supplied to examiners. This may be done by simply filling in the applicable fields and reproducing the form on a copy machine. Once the data from the sheet has been entered into the computer, the Safety Assurance office may either retain or discard the sheet as desired. The following titles apply to the data fields on the sheet:

A. Section I—Transmittal.

1) A valid inspector name code must be entered in the "Inspector Name Code" field on each sheet before the data is entered into the computer. Inspectors conducting certification shall enter their assigned code. Examiners should leave this space blank.

2) The computer generates the entry in the "Record ID" field. Inspectors and examiners shall leave this field blank.

3) In the "Activity Number" field, inspectors enter the applicable code from the 1500 series. The applicable codes are listed on the job aids. For example, an inspector who has conducted an oral examination for an original issuance of an Airline Transport Pilot (ATP) Certificate shall enter code "1510." Examiners enter code "1563" in this field for all activities. Data sheets supplied to examiners should be overprinted with this number. See subparagraph 21) for instructions for examiners concerning the field labeled "Tracking."

UNCONTROLLED COPY WHEN DOWNLOADED
Check with FSIMS to verify current version before using

4) In the "FAR" field, inspectors and examiners enter the major section of the Title 14 of the Code of Federal Regulations (14 CFR) part under which certification is being conducted, such as "61" for pilots, "63" for Flight Engineers (FE), and "65" for aircraft dispatchers. This field should be overprinted for sheets supplied to examiners.

5) Inspectors and examiners shall leave the "NPG" field blank unless specific directions for its use are provided.

6) In the "Status (POC)" field, inspectors and examiners enter "C". This field should be overprinted for forms supplied to examiners.

7) Enter the "Call-up Date" when appropriate (usually left blank).

8) Enter the "Start Date" when appropriate (usually left blank).

9) In the "Results (ACEFISTX)" field, enter "C" if the test phase has been completed, whether the applicant has succeeded or failed. If the test phase has been terminated with a failure, the test phase is complete and a "C" shall be entered in this field. When a test phase is terminated before completion and the applicant's performance is satisfactory up to the point of termination, a "T" shall be entered in the "Results" field. In this case, a short explanation should be entered in the "Comment Text" field in Section IV, such as "Flight test terminated due to malfunction of simulator visual system."

10) The "Closed Date" of the event must always be entered in this field.

11) The airline or operator code must be entered in the "Designator" field. This field should be preprinted when appropriate.

12) In the "Aircraft Reg #" field, enter the aircraft N-number, if applicable. Leave this field blank for simulator, oral, and other test phases.

13) In the "Loc/Departure Point" field, enter the three- or four-character location identifier for all activities. If the location has no identifier, use the nearest appropriate one. This field should be preprinted when appropriate.

14) The "Loc/Arrival Point" field is optional. It should be used when applicable, but may be left blank.

15) The "Flight #" field is optional. It should be used when applicable, but may be left blank.

16) In the "Make-Model-Series" field, make an appropriate entry for all test phases. This field should be preprinted when appropriate.

17) The "EIR #" field should not be used. A slash or "N/A" should be placed in this field on overprinted forms.

UNCONTROLLED COPY WHEN DOWNLOADED
Check with FSIMS to verify current version before using

18) In the "Airman Cert #" field, inspectors shall enter either the applicant's airman certificate number or "pending" if the applicant does not yet have a certificate. Examiners shall enter their own airman certificate number (not the applicant's certificate number).

19) In the "Name" field, inspectors enter the applicant's name. Designated Examiners (DE) shall enter their own name (not the applicant's name) in this field. See the instructions for Section II in subparagraph B below for related information and guidance.

20) An entry must always be made in the "Pass/Fail" field. An "F" shall be entered in this field when the test phase is unsatisfactory. A "P" shall be entered in all other cases, whether or not the phase is complete.

21) In the "Tracking" field, examiners enter the appropriate activity code from the job aid and 14 CFR. For example, an examiner who has conducted an oral examination for an original issuance of an ATP Certificate shall enter code "1510." An examiner who has conducted a practical test for an Aircraft Dispatcher Certificate shall enter code "1524."

22) In the "Miscellaneous" field, when an examiner conducts a phase of a test and is observed doing so by an FAA inspector, "OBSVD" shall be entered in this field. The inspector's name should be entered in the "Comment Text" field in Section IV. On other occasions, the use of this field is optional.

23) The remaining fields in the form's Section I are provided for Safety Assurance office use, special programs, and future requirements. In the absence of any guidance, these fields should be left blank.

B. Section II—Personnel.

1) When an examiner completes the data sheet, the applicant's name shall be entered under "Personnel Name." "APPL" shall be entered under "Position." The applicant's certificate number shall be entered under "Remarks." If this is an original issuance of a certificate, enter "pending" under the certificate number.

2) When a recommendation is required for a test phase, the name of the recommending instructor shall be entered under "Personnel Name." "RI" shall be entered under "Position." The instructor's certificate number shall be entered under "Remarks." When a recommendation is not required for the applicant, the name of the instructor or supervisor who has certified that the applicant is competent shall be entered in the same manner.

C. Section III—Equipment. Entries in the fields in this section are optional.

D. Section IV—Comment. Both inspectors and examiners are encouraged to make entries in this field. A topic such as the reasons and circumstances surrounding the failure of an applicant should be commented upon; however, comments should not be limited to this type of topic. A blank line should be left between each separate comment. Inspectors should code their comments. To assist in the standardization of coding, examiners should leave the coding blank. The reviewing inspector should code the examiner's remarks.

UNCONTROLLED COPY WHEN DOWNLOADED
Check with FSIMS to verify current version before using

5-134 SAFETY ASSURANCE OFFICE RESPONSIBILITIES. Safety Assurance offices shall make the Program Tracking and Reporting Subsystem (PTRS) data entries for both inspectors and examiners and either retain or discard the data sheet, as appropriate. Safety Assurance offices shall review completed certification paperwork for accuracy and completeness and forward the certification paperwork to AFB-720 at the following address: Airmen Certification Branch, AFB-720, P.O. Box 25082, Oklahoma City, OK 73125-0082.

Figure 5-14. Sample FAA Form 8060-5, Notice of Disapproval of Application

UNITED STATES OF AMERICA
DEPARTMENT OF TRANSPORTATION-FEDERAL AVIATION ADMINISTRATION

NOTICE OF DISAPPROVAL OF APPLICATION

NOTE
PRESENT THIS FORM UPON APPLICATION FOR REEXAMINATION

NAME AND ADDRESS OF APPLICANT	CERTIFICATE OR RATING SOUGHT
JAMES RONALD DONE 408 JACKSON HEIGHTS COURT LITTLE ROCK, ARKANSAS 77117	AIRLINE TRANSPORT PILOT

On the date shown, you failed the examination indicated below:

☐ FLIGHT ☐ ORAL ☒ PRACTICAL

AIRCRAFT USED *(Make and Model)*	FLT. TIME RECORDED IN LOGBOOK		
	PILOT-IN-COMM. OR SOLO	INSTRUMENT	DUAL
GRUMMAN G-159	2000	500	200

UPON REAPPLICATION YOU WILL BE REEXAMINED ON THE FOLLOWING:
AOA III E, Instrument Takeoff
AOA IV B, Approaches to Stalls and Stall Recovery
AOA V Not Tested

(First Failure)

I have personally tested this applicant and deem his performance unsatisfactory for the issuance of the certificate of rating sought.

DATE OF EXAMINATION	SIGNATURE OF EXAMINER OR INSPECTOR	DESIGNATION OR OFFICE NO.
01/16/2018	John H. Ayres John H. Ayres	SW-11

FAA Form 8060-5 (4-82) Electronic Forms (PDF)

UNCONTROLLED COPY WHEN DOWNLOADED
Check with FSIMS to verify current version before using

Figure 5-15. FAA Form 8000-36, Program Tracking and Reporting Subsystem Data Sheet

PROGRAM TRACKING AND REPORTING SUBSYSTEM DATA SHEET
(One PTRS Record Required for Each Unit of Work as defined in the PPM)

SECTION I – Transmittal
Inspector Name Code:

Record ID:	Activity Number:	FAR:
NPG:	Status (POC):	Call-up Date:
Start Date:	Results (ACEFISTX):	Closed Date:
Designator:	Affiliated Designator:	OTNA:
Aircraft Reg #:	Loc/Departure Point:	Loc/Arrival Point:
Flight #:	Complaint #:	Occurrence #:
Make-Model-Series:		Incident #:
Simulator/Device ID:		EIR #:
Non-Cert Activity Name/Company:		Accident #:

Airman Cert #:	Name:
Examiner Cert #:	Name:
Applicant Cert #:	Name:
Rec Instructor Cert #:	Name:

Pass/Fail:	Exam Kind:	8430-13 #:
Tracking:	Miscellaneous:	Numeric Misc:
Local Use:	Regional Use:	National Use:

Triggers	Activity Number:	Repeated Number:	Geographic? Yes ☐ No ☐	Foreign? Yes ☐ No ☐

SECTION II – Personnel (unlimited)

Personnel Name	Position	Base	Remarks (23 Characters)

SECTION III – Equipment (unlimited)

Manufacturer	Model	Serial #	Remarks (23 Characters)

SECTION IV – COMMENT (unlimited)

Primary Area	Keyword	Opinion Code	Comment Text (unlimited length)

Date: **Originator:** **Office:**

Inspector Signature **Supervisor Initials:**

FAA Form 8000-36 10-99)

RESERVED. Paragraphs 5-135 through 5-150.

UNCONTROLLED COPY WHEN DOWNLOADED
Check with FSIMS to verify current version before using

VOLUME 5 AIRMAN CERTIFICATION

CHAPTER 4 TITLE 14 CFR PART 63 CERTIFICATION—FLIGHTCREW MEMBERS OTHER THAN PILOTS

Section 4 Conduct a Flight Engineer Proficiency Check

5-1056 PROGRAM TRACKING AND REPORTING SUBSYSTEM (PTRS). For Title 14 of the Code of Federal Regulations (14 CFR) part 125, use activity codes:

A. Initial Operating Experience: 1356.

B. Proficiency Check: 1541, 1542, 1543.

5-1057 OBJECTIVE. The objective of this task is to determine an applicant's qualification to act as a Flight Engineer (FE) on 14 CFR part 125 airplanes requiring three crewmembers. Successful completion of this task results in an indication of satisfactory or unsatisfactory performance on Federal Aviation Administration (FAA) Form 8410-1, Airman Proficiency/Qualification Check.

5-1058 GENERAL. Some aircraft are type-certificated for three flightcrew members (e.g., B-727, DC-10), and part 125 operators using such aircraft must employ FEs. An existing operator wishing to use an FE crewmember who does not meet the recency-of-experience requirements will request a proficiency check from the FAA if the operator has no FE check airman. An applicant for a part 125 certificate will have prospective FEs evaluated as part of the demonstration and inspection phase during certification. If the prospective FE does not meet the recency-of-experience requirements, the proficiency flight check must be conducted.

A. Existing Operators. The principal operations inspector (POI) is responsible for ensuring that FE flight checks are accomplished when they are requested by an operator. The POI may conduct the check or may assign a qualified operations inspector to do so.

B. Part 125 Applicants. The certification project manager is responsible for ensuring that FE flight checks are accomplished when they are required for initial certification. The project manager may conduct the check, if qualified, or have a member of the certification team conduct the check, if qualified. If no one on the team is qualified, the project manager must coordinate with the operations unit manager to have a qualified inspector conduct the test.

5-1059 FE QUALIFICATIONS. For part 125 operations, a person may serve as a required FE if that person has had, within the preceding 6 calendar-months, at least 50 hours of flight time as an FE on the type of airplane involved.

A. Medical Certificate Requirements. The FE must also hold at least a second-class medical certificate issued under 14 CFR part 67 within the preceding 12 months.

UNCONTROLLED COPY WHEN DOWNLOADED
Check with FSIMS to verify current version before using

B. FE Class Ratings. The FE must have at least one of the following aircraft class ratings on the FE Certificate as appropriate:

- Reciprocating-engine-powered,
- Turbopropeller-powered, or
- Turbojet-powered.

5-1060 USE OF FLIGHT SIMULATORS FOR FE CHECKS. FEs possessing a Commercial Pilot Certificate with an instrument, category, and class rating, or pilots already qualified as second in command (SIC) and reverting to FE may complete the entire flight check in an approved airplane simulator.

5-1061 KNOWLEDGE PORTION OF THE FE FLIGHT CHECK. In addition to the topics covered in subparagraphs 5-1066D and 5-1066E below, the inspector must determine that the applicant is familiar and competent with all essential current information and operating procedures used by the operator. The oral or written test must be designed for the make and model (M/M) airplane to be used for the test. If a simulator is used, the oral or written test must reflect the M/M airplane the FE will be flying.

5-1062 FLIGHT CHECK JOB AIDS. FAA Form 8410-1 is used to indicate whether performance is satisfactory or unsatisfactory. Figure 5-133, Flight Engineer Flight Check Job Aid, is used to assure that all appropriate areas are covered during the check.

5-1063 EVALUATING FEs.

A. Unsatisfactory Items. Any item checked unsatisfactory on FAA Form 8410-1 results in a failure of the entire flight check.

B. Evaluation Criteria. In addition to the objective standards provided in paragraph 5-1066, the inspector bases the decision on the following:

- The FE’s timeliness and accuracy in execution of duties,
- The FE’s comfort at panel, and
- How well the FE coordinated with the other crewmembers.

5-1064 PREREQUISITES AND COORDINATION REQUIREMENTS.

A. Prerequisites. This task requires knowledge of regulatory requirements in part 125, FAA policies, FE flight check procedures, task background, and qualification as an Aviation Safety Inspector—Operations (ASI-OP).

B. Coordination. This task requires coordination with the POI, the operations unit supervisor, and, possibly, the airworthiness unit.

UNCONTROLLED COPY WHEN DOWNLOADED
Check with FSIMS to verify current version before using

5-1065 REFERENCES, FORMS, AND JOB AIDS.

A. References (current editions):

- Title 49 of the United States Code (49 U.S.C.).
- Title 14 CFR Part 63.
- Title 14 CFR Part 125, specifically § 125.265.
- Advisory Circular (AC) 125-1, Operations of Large Airplanes Subject to 14 CFR Part 125.

B. Forms. FAA Form 8410-1, Airman Proficiency/Qualification Check.

C. Job Aids. Sample figures and letters.

5-1066 PROCEDURES.

A. District Office Receives Request for FE Check. Requests for FE checks come from operators who do not have the services of a FE check airman or from applicants for a part 125 certificate.

B. Schedule Flight Check. Based on inspector workload and office requirements, schedule a date, place, and time for the check.

C. Verify Applicant's Identity and Certificates.

1) Verify the FE's identification (driver's license, employee identification, etc.).

2) Determine if the person holds an FE Certificate appropriate for the airplane used in the check.

3) Determine if the person holds at least a valid second-class medical certificate (part 63, § 63.31).

4) If the FE does not present the appropriate and current certificates, advise the airman that the flight check cannot be administered and make entry into PTRS. Advise the company in writing (see Figure 5-134, Letter Advising Pilot Not Qualified for Flight Engineer Check).

5) If the FE does present the appropriate and current certificates, conduct the knowledge portion of the FE check.

D. Conduct the Knowledge Portion of the FE Check. The knowledge portion of the check consists of an oral or written test covering the following subjects:

1) The 14 CFR part that apply to FEs.

2) The theory of flight and aerodynamics.

UNCONTROLLED COPY WHEN DOWNLOADED
Check with FSIMS to verify current version before using

3) Basic meteorology with respect to engine operations.

4) Center of gravity (CG) computations.

5) Preflight of the airplane to be used in the check.

6) Calculation of aircraft performance data.

7) Airplane equipment.

8) Airplane systems, including specifications, construction features, flight controls, hydraulic systems, pneumatic systems, electrical systems, anti-icing and deicing systems, pressurization and air-conditioning systems, vacuum systems, pitot-static systems, instrument systems, and fuel and oil systems.

9) Engines, including construction features, lubrication, ignition, carburetion and induction, supercharging and fuel control systems, accessories, propellers, and instrumentation.

10) Airplane loading.

11) Airplane procedures and engineer operations, with respect to limitations.

12) Normal operating procedures (ground and flight), including, as appropriate, servicing methods and procedures; operation of all airplane systems; operation of all engine systems; aircraft loading and CG computation; cruise control (normal, long range, maximum endurance); power and fuel computation; and meteorology as applicable to engine operation.

13) Emergency procedures and emergency equipment, as appropriate to:

- Landing gear, brakes, flaps, speed brakes, and leading edge devices;
- Pressurization and air-conditioning;
- Portable fire extinguishers;
- Fuselage fire and smoke control;
- Loss of electrical power;
- Engine fire control;
- Engine shutdown and restart;
- Oxygen;
- Hydraulic system; and
- Fuel system.

14) Mathematical computation of engine operations and fuel consumption.

NOTE: If the FE fails the knowledge portion of the test, determine whether or not to continue with the skill or flight portion of the test.

UNCONTROLLED COPY WHEN DOWNLOADED
Check with FSIMS to verify current version before using

E. Conduct the Skill Portion of the FE Check.

1) Observe the FE conduct a walk-around inspection.

a) The inspection must be in accordance with the FAA-approved flight manual or the company manual.

b) The inspection must include the procedures outlined in the flight check job aid (Figure 5-133).

2) Observe the FE's performance during servicing. The FE must adhere to the safe operating procedures outlined in the company policies and procedures manual and the approved Airplane Flight Manual (AFM).

3) Observe the FE's performance during engine start, power checks, pretakeoff procedures, postlanding procedures, and shutdown procedures. The FE must follow the procedures in the company policies and procedures manual and the approved AFM.

4) Observe inflight performance of assigned duties during taxi, runup, takeoff, climb, cruise, descent, approach, and landing. The FE must follow safe operating practices and procedures in the company policies and procedures manual and the approved AFM.

5) Observe normal duties and procedures relating to the airplane, airplane engines, propellers (if appropriate), and other systems and appliances, including power control, temperature control, engine operations analysis, operation of all systems, fuel management, logbook entries, pressurization, and air conditioning. The FE must follow safe operating practices and procedures in the company policies and procedures manual and the approved AFM.

6) Observe the FE performing emergency duties and procedures. The FE must recognize and take appropriate action for malfunctions of the airplane, engines, propellers (if appropriate), and systems and appliances, including:

- Analysis of abnormal engine operation;
- Analysis of abnormal operation of all systems and corrective actions;
- Engine fire control;
- Fuselage fire control;
- Smoke control;
- Loss of power or pressure in each system;
- Engine overspeed;
- Fuel dumping;
- Landing gear, spoilers, speed brakes, and flap extension and retraction;
- Engine shutdown and restart; and
- Use of oxygen.

UNCONTROLLED COPY WHEN DOWNLOADED
Check with FSIMS to verify current version before using

F. Evaluate the FE's Performance.

1) If the FE failed the check:

a) Debrief the FE on the reasons for failure.

b) Complete FAA Form 8410-1, in duplicate, indicating reasons for disapproval.

c) Give one copy of the completed FAA Form 8410-1 to the FE and one copy to the POI for the district office files.

d) Make the appropriate PTRS entry.

2) If the FE passed the check:

a) Debrief the FE, emphasizing good points and indicating areas that were satisfactory but marginal.

b) Complete FAA Form 8410-1, in duplicate, indicating approval.

c) Give one copy of the completed FAA Form 8410-1 to the FE and one copy to the POI for the district office files.

d) Make the appropriate PTRS entry.

5-1067 TASK OUTCOMES. Completion of this task results in either:

- A completed FAA Form 8410-1 indicating approval, or
- A completed FAA Form 8410-1 indicating failure.

5-1068 FUTURE ACTIVITIES.

- The records of any FE checked will be reviewed as part of future surveillance.
- The FE may return for subsequent checks.
- The inspector may initiate an enforcement investigation, as appropriate, if the FE is involved in an accident, incident, or possible violation of regulations.
- Possible reevaluation under 49 U.S.C.

UNCONTROLLED COPY WHEN DOWNLOADED
Check with FSIMS to verify current version before using

Figure 5-133. Flight Engineer Flight Check Job Aid

FLIGHT ENGINEER FLIGHT CHECK JOB AID

Pilot's Name _____ Company _____

Date _____ Inspector _____

The flight engineer check should consist of a demonstration of the following.

Item:	Completed
Knowledge Test (oral or written)	
The FAR applicable to flight engineers	
Theory of flight and aerodynamics	
Basic meteorology and engine operations	
Center of gravity computations	
Preflight	
Airplane equipment	
Airplane systems, including specifications and construction features of --	
Flight controls	
Hydraulic systems	
Pneumatic systems	
Electrical systems	
Anti-icing and de-icing systems	
Pressurization and air conditioning systems	
Vacuum systems	
Pitot-static systems	
Instrument systems	
Fuel and oil systems	

UNCONTROLLED COPY WHEN DOWNLOADED
Check with FSIMS to verify current version before using

Page Two	
Item:	Completed
Engines, including --	
Construction features	
Lubrication	
Ignition	
Carburetion and induction	
Supercharging	
Fuel control systems	
Accessories	
Propellers (if appropriate)	
Instrumentation	
Airplane Loading	
Limitations, including --	
Airplane procedures	
Engine operations	
Normal operating procedures (ground and flight), including --	
Servicing methods and procedures	
Operation of all airplane systems	
Operation of all engine systems	
Cruise control (normal, long range, maximum endurance)	
Power and fuel computations	

UNCONTROLLED COPY WHEN DOWNLOADED
Check with FSIMS to verify current version before using

Page Three	
Item:	Completed
Emergency procedures and emergency equipment Landing gear, brakes, flaps, speed brakes, and leading edge devices	
Pressurization and air conditioning	
Portable fire extinguishers	
Fuselage fire and smoke control	
Loss of electrical power	
Engine fire control	
Engine shutdown and restart	
Oxygen	
Engine operation/fuel consumption computations	
SKILL TEST (In airplane, simulator, or approved training device)	
Preflight inspection	
Servicing	
Engine start and power checks	
Normal duties and procedures, including --	
Airplane engines	
Propellers (if appropriate)	
Airplane systems	
Appliances	
Power control	
Temperature control	

UNCONTROLLED COPY WHEN DOWNLOADED
Check with FSIMS to verify current version before using

Page Four	
Item:	Completed
Engine operations analysis	
Fuel management	
Pressurization and air conditioning	
Logbook entries	
Crew coordination	
Emergency duties and procedures for --	
Analysis of abnormal engine operation	
Analysis of abnormal operation of all systems and corrective action	
Engine fire control	
Fuselage fire control	
Smoke control	
Loss of power or pressure in each system	
Engine overspeed	
Fuel dumping	
Landing gear, spoilers, speed brakes, and flap extension and retraction	
Engine shut-down and restart	
Use of oxygen	
Crew coordination	
REMARKS:	

UNCONTROLLED COPY WHEN DOWNLOADED
Check with FSIMS to verify current version before using

Figure 5-134. Letter Advising Pilot Not Qualified for Flight Engineer Check

FAA letterhead

Operator's name and address

Dear _____:

This is to inform you that the Flight Engineer check scheduled for [*date*] at [*location*] was not conducted because Mr./Ms. [*name of airman*] did not qualify.

- Cite reasons why airman was not qualified.
- Suggest how each can be corrected.

If you have any questions or you wish to reschedule the check with the same or a different airman, please contact this office at [*telephone number*].

Signed by: CPM, if initial certification

POI, if an existing operator

RESERVED. Paragraphs 5-1069 through 5-1085.

UNCONTROLLED COPY WHEN DOWNLOADED
Check with FSIMS to verify current version before using

VOLUME 5 AIRMAN CERTIFICATION

CHAPTER 5 TITLE 14 CFR PART 65—AIRMEN OTHER THAN FLIGHT CREWMEMBERS

Section 10 Part 65 Aircraft Dispatcher Certification

5-1361 PROGRAM TRACKING AND REPORTING SUBSYSTEM (PTRS) ACTIVITY CODES.

- 1513, CERT/AIRM/DISP/LTR/COMPTENCY;
- 1524, CERT/AIRM/DISPATCHER; and
- 1563, CERT/EXMNR/REVW EXMNR/APD/TCE/F.

5-1362 OBJECTIVE. This section provides aviation safety inspectors (ASI), examiners, and office managers with the necessary directives and guidance for conducting aircraft dispatcher certification, including administering the Aircraft Dispatcher Practical Test. For the purposes of this section, an "examiner" who administers the Aircraft Dispatcher Practical Test is either an ASI—Aircraft Dispatch (ASI-AD) or a Designated Aircraft Dispatcher Examiner (DADE).

5-1363 FORMS AND FIGURES.

A. Applicable Federal Aviation Administration (FAA) Forms:

- FAA Form 8000-36, Program Tracking and Reporting Subsystem Data Sheet.
- FAA Form 8060-4, Temporary Airman Certificate.
- FAA Form 8060-5, Notice of Disapproval of Application.
- FAA Form 8400-3, Application for an Airman Certificate and/or Rating.
- FAA Form 8710-6, Examiner Designation and Qualification Record.

B. Figures Included in This Section:

- Figure 5-214, Sample Practical Test Tracking Form.
- Figure 5-215, Sample Letter of Aeronautical Competency—Successful Applicant of Aircraft Dispatcher Certificate Less Than 23 Years of Age.
- Figure 5-216, Sample Letter of Discontinuance.

5-1364 RELATED POLICY AND GUIDANCE.

A. FAA-Approved Aircraft Dispatcher Certification Courses.

1) FAA Order 8900.1. Policy governing the approval and management of Aircraft Dispatcher Certification Courses, approved in accordance with Title 14 of the Code of Federal Regulations (14 CFR) part 65 subpart C, is contained in Volume 3, Chapter 63, Sections 1 through 3.

UNCONTROLLED COPY WHEN DOWNLOADED
Check with FSIMS to verify current version before using

2) Advisory Circular (AC) 65-34. The current edition of AC 65-34, FAA-Approved Aircraft Dispatcher Certification Courses, contains standards and guidelines for course operators and for individuals seeking certification as an aircraft dispatcher.

B. Designated Aircraft Dispatcher Examiners (DADE). Policy governing the appointment and management of DADEs is contained in Volume 13, Chapter 3, Sections 1 through 5.

C. English Language Standards for Aircraft Dispatcher Certificates. The current edition of AC 60-28, FAA English Language Standard for an FAA Certificate Issued Under 14 CFR Parts 61, 63, 65, and 107, contains requirements and guidelines related to English language skills necessary for obtaining and holding an Aircraft Dispatcher Certificate.

D. Flight Standards Service Schedule of Charges Outside the United States. The current edition of AC 187-1, Flight Standards Service Schedule of Charges Outside the United States, contains a schedule of fees that includes charges for FAA services related to the certification of aircraft dispatchers.

E. Integrated Airman Certification and Rating Application (IACRA). Information related to IACRA can be found at https://iacra.faa.gov. There is also information in Volume 5, Chapter 2, Section 4. That particular section applies to certification of pilots under 14 CFR part 61; however, the information related to IACRA is also relevant for the certification of aircraft dispatchers under part 65.

5-1365 AIRCRAFT DISPATCHER CERTIFICATE—GENERAL REQUIREMENTS.

A. Requirement to Carry an Aircraft Dispatcher Certificate. Part 65, § 65.61 states that no person may act as an aircraft dispatcher (exercising responsibility with the pilot in command (PIC) in the operational control of a flight) in connection with any civil aircraft in air commerce unless that person has in his or her personal possession an Aircraft Dispatcher Certificate issued by the FAA in accordance with part 65. In addition, each person who holds an Aircraft Dispatcher Certificate must present it for inspection upon the request of the Administrator, an authorized representative of the National Transportation Safety Board, or any Federal, state, or local law enforcement officer.

B. General Eligibility Requirements for an Aircraft Dispatcher Certificate. In accordance with § 65.53, the eligibility requirements for an Aircraft Dispatcher Certificate are as follows:

1) Minimum Age for Knowledge Test. To be eligible to take the Aircraft Dispatcher Knowledge Test (ADX Knowledge Test) a person must be at least 21 years of age.

2) Minimum Requirements for a Certificate. To be eligible for an Aircraft Dispatcher Certificate, a person must meet the following criteria:

a) Be at least 23 years of age.

b) Be able to read, speak, write, and understand the English language.

UNCONTROLLED COPY WHEN DOWNLOADED
Check with FSIMS to verify current version before using

c) Pass the ADX Knowledge Test, as required by § 65.55.

d) Pass the Aircraft Dispatcher Practical Test, as required by § 65.59.

e) Comply with the experience or training requirements of § 65.57.

C. Knowledge Requirements. Section 65.55 contains the knowledge requirements for an Aircraft Dispatcher Certificate. The ADX Knowledge Test is based on these requirements.

D. Experience or Training Requirements. An applicant for an Aircraft Dispatcher Certificate must meet the experience or training requirements contained in § 65.57.

E. Skill Requirements. An applicant for an Aircraft Dispatcher Certificate must pass an Aircraft Dispatcher Practical Test given by the Administrator (or his/her designee). The Aircraft Dispatcher Practical Test will be based on any one type of large aircraft used in air carrier operations. The practical test will be based on the current edition of the Aircraft Dispatcher Practical Test Standards (PTS). The FAA publishes the Aircraft Dispatcher PTS, which is based on the requirements of part 65 appendix A.

5-1366 THERE ARE NO RATINGS OR LIMITATIONS ASSOCIATED WITH AN AIRCRAFT DISPATCHER CERTIFICATE. An Aircraft Dispatcher Certificate is a basic unrestricted certificate that does not expire. Unlike pilot certificates, limitations such as those based on medical conditions or English language skills will not be issued.

5-1367 WHO CAN ADMINISTER THE AIRCRAFT DISPATCHER PRACTICAL TEST. Only a fully trained and qualified ASI-AD or DADE may administer the Aircraft Dispatcher Practical Test.

A. ASI-AD. An ASI-AD (often referred to as a dispatch inspector) is an ASI who holds a valid United States Aircraft Dispatcher Certificate and is specifically designated as an "1825-AD" in an official Office of Personnel Management (OPM) position description (PD). The PD for an ASI-AD is contained in Human Resource Policy Manual (HRPM) Supplement, volume 1, and is listed as an "1825AD". An ASI-AD is considered to be fully trained and qualified after having completed all of the required FAA Academy initial training (string training) courses, including the course specific to Aircraft Dispatcher Functions for ASIs.

B. DADEs. In accordance with 14 CFR part 183, § 183.25(f) and FAA policy applicable to DADEs (see Volume 13, Chapter 3), a DADE is a Technical Personnel Examiner (TPE) who is designated as a representative of the Administrator and who may do the following:

1) Accept applications for and conduct the Aircraft Dispatcher Practical Test; and

2) At the discretion of the managing FAA office, issue temporary Aircraft Dispatcher Certificates to qualified applicants.

5-1368 SPECIFIC ELIGIBILITY REQUIREMENTS FOR THE AIRCRAFT DISPATCHER PRACTICAL TEST. To be eligible to take the Aircraft Dispatcher Practical Test, a person must meet the following requirements:

UNCONTROLLED COPY WHEN DOWNLOADED
Check with FSIMS to verify current version before using

A. Pass the ADX Knowledge Test. To be eligible for an Aircraft Dispatcher Certificate, an individual must past the ADX Knowledge Test as outlined in § 65.55. The ADX Knowledge Test is a computerized test. The test is administered at an Airman Knowledge Testing (AKT) center. Information related to AKT centers can be found on the FAA's website at www.faa.gov, under the Training and Testing tab. To access the information, select "Airman Testing" from the drop-down menu under the tab. Once on the Airman Testing page, click on the link for "Knowledge Testing."

B. Minimum Age. To be eligible to take the Aircraft Dispatcher Practical Test, a person must be at least 21 years of age. This is based on the minimum age requirement for the ADX Knowledge Test (refer to § 65.53(a)). The minimum age requirement for an Aircraft Dispatcher Certificate is 23 years of age. Therefore, applicants who take the Aircraft Dispatcher Practical Test prior to reaching 23 years of age are not entitled to an Aircraft Dispatcher Certificate. Applicants under the age of 23 who pass the Aircraft Dispatcher Practical Test will be issued a Letter of Aeronautical Competency in lieu of a Temporary Airman Certificate. Letters of Aeronautical Competency are discussed later in this section.

C. English Language Requirement. To be eligible to take the Aircraft Dispatcher Practical Test, and be issued an Aircraft Dispatcher Certificate, a person must be able to read, speak, write, and understand the English language in accordance with § 65.53. Any applicant who fails to demonstrate this ability will not be issued an Aircraft Dispatcher Certificate.

D. Airman Knowledge Test Report. Each applicant for an Aircraft Dispatcher Certificate must present an original, embossed Airman Knowledge Test Report showing satisfactory test results. The applicant must have passed the test within the preceding 24 calendar-months prior to the completion of the practical test.

E. Application. Each applicant must complete and sign FAA Form 8400-3.

F. Experience/Training Requirement. Each applicant for an Aircraft Dispatcher Certificate must show evidence satisfactory to the Administrator of having obtained experience or training in accordance with § 65.57.

1) Graduates of an FAA-Approved Aircraft Dispatcher Certification Course in Accordance with § 65.57(b). Applicants possessing a valid statement of graduation and an instructor's recommendation from an FAA-approved Aircraft Dispatcher Certification Course meet the training requirements of § 65.57(b) and are eligible to take the Aircraft Dispatcher Practical Test.

a) A statement of graduation (graduation certificate) is valid for 90 days from completion of a course. A course operator may revalidate the graduation certificate for an additional 90 days only if the operator determines that the student remains proficient in the subject areas listed in part 65 appendix A.

b) The instructor's recommendation must be entered in section 7 of FAA Form 8400-3. The instructor's signature indicates the applicant has met the requirements for and is ready to take the Aircraft Dispatcher Practical Test.

UNCONTROLLED COPY WHEN DOWNLOADED
Check with FSIMS to verify current version before using

2) Applicants Who Provide Documentary Evidence of Experience in Accordance with § 65.57(a)(1), (2), or (3). Applicants who have not graduated from an FAA-approved part 65 Aircraft Dispatcher Certification Course but instead present documentary evidence of having experience, in accordance with § 65.57(a)(1), (2), or (3), may be eligible to take the Aircraft Dispatcher Practical Test, provided the Administrator finds the documentary evidence to be satisfactory. In this case, the Administrator will be represented by an ASI-AD, who will review the documentary evidence to determine if it is satisfactory. If the ASI-AD finds the documentary evidence to be satisfactory, the ASI-AD may administer the Aircraft Dispatcher Practical Test to the applicant; or an ASI-AD who is the FAA managing specialist of a DADE may authorize the DADE to administer the test. The ASI-AD must retain the applicant's documentary evidence as part of the airman certification file.

3) Applicants Who Provide Documentary Evidence of Experience in Aircraft Operations in Accordance with § 65.57(a)(4) Require Approval from the Air Transportation Division (AFS-200). Section 65.57(a)(4) allows an applicant to present documentary evidence to the Administrator of having performed other duties in aircraft operations that may provide equivalent experience to what is prescribed in § 65.57(a)(1), (2), or (3). For the purposes of § 65.57(a)(4), the Administrator will be represented by AFS-200, who will make the ultimate determination as to whether or not the applicant's documentary evidence is satisfactory and shows experience equivalent or greater than what is prescribed in § 65.57(a)(1), (2), or (3). No examiner (ASI-AD or DADE) may administer the Aircraft Dispatcher Practical Test to an applicant presenting evidence of equivalent experience in accordance with § 65.57(a)(4) without first obtaining written approval from AFS-200.

a) Requests for approval from AFS-200 must come from the appropriate Flight Standards office manager. All requests for approval must be accompanied by documentary evidence of the applicant's experience.

b) Prior to requesting approval from AFS-200, all documentary evidence submitted by the applicant must be reviewed by an ASI-AD. The ASI-AD is responsible for making the initial determination as to whether or not the documentary evidence is satisfactory. If the ASI-AD's initial determination is that the evidence is satisfactory, the office manager will document the ASI-AD's determination in the memo requesting approval from AFS-200 to test the applicant. The office manager will then send the memo directly to AFS-200.

c) If AFS-200 determines the applicant's documentary evidence showing equivalent experience is satisfactory, AFS-200 will grant approval to test the applicant via memo.

d) Upon receiving approval from AFS-200, an ASI-AD may test the applicant. An ASI-AD who is the FAA managing specialist of a DADE may authorize the DADE to test the applicant on a one-time-only basis, provided the managing specialist observes the DADE administering the entire test. Approval letters from AFS-200 must be retained as part of an applicant's airman certification file.

UNCONTROLLED COPY WHEN DOWNLOADED
Check with FSIMS to verify current version before using

4) Required Documentation of Training and Experience to be Provided by the Applicant. An applicant providing documentary evidence of experience in accordance with any of the provisions of § 65.57(a) must submit the following types of documents as evidence of experience:

- Letters from employers on company letterhead accompanied by applicable training records (letters must contain contact information (e.g., telephone or fax) for verification purposes);
- Logbooks;
- Military service records; and
- Employment records.

5-1369 APPLICANT IDENTIFICATION. The identification requirements contained in this section are based on the requirements contained in the current edition of Order 8080.6, Conduct of Airman Knowledge Tests.

A. Verification of Identity. The applicant must provide valid, positive proof of identification. The identification may be presented in more than one form and must contain at least the following:

- An official photograph of the applicant,
- The applicant's date of birth,
- The applicant's signature, and
- The applicant's physical residential address.

B. Acceptable Forms of Identification.

1) U.S. Citizens and Resident Aliens. Acceptable forms of photo identification for U.S. citizens and resident aliens include:

- Driver's license issued by a U.S. state or territory,
- U.S. Government identification card,
- U.S. Military identification card, or
- Passport or alien residency card.

2) Non-U.S. Citizens. Acceptable forms of photo identification for non-U.S. citizens must include a passport and one or more of the following:

- Driver's license issued by a U.S. state or territory.
- Identification card issued by any government entity.

C. Annotation of Identification Accepted. When an examiner accepts the form(s) of identification, he or she must annotate the "Practical Test Report" section of FAA Form 8400-3. Copies of identification documentation do not have to accompany the application package; simply reference the identification in the appropriate section on the back of the form.

UNCONTROLLED COPY WHEN DOWNLOADED
Check with FSIMS to verify current version before using

5-1370 CONTENTS OF THE APPLICATION FOR CERTIFICATION PACKAGE. The applicant must provide the following prior to testing:

- A completed FAA Form 8400-3. For applicants who have graduated from an FAA-approved Aircraft Dispatcher Certification Course, FAA Form 8400-3 must have an instructor's recommendation entered in section 7.
- An original, embossed Aircraft Dispatcher Airman Knowledge Test Report showing satisfactory test results.
- A statement of graduation issued or revalidated (in accordance with § 65.70(b)) showing that the applicant has successfully completed an FAA-approved Aircraft Dispatcher Certification Course. (A statement of graduation is not required if the applicant has not attended an FAA-approved part 65 Aircraft Dispatcher Certification Course).
- If the applicant does not have a statement of graduation, then the application package must include the documentary evidence required to support the previous experience listed in § 65.57(a) (see subparagraph 5-1368F2) through 4)).

5-1371 APPLICATIONS PROCESSED VIA THE IACRA. The IACRA application is a web-based program that automates the airman certification application process and electronically captures and validates certain information required to complete the application and other certification documents, such as applicable knowledge test results or any uploaded graduation certificates.

A. Examiners. When an examiner uses IACRA, nothing will be mailed to the managing FAA office. The process is completely electronic. Instructions on the use of IACRA can be found on the IACRA website at https://iacra.faa.gov. There is also information in Volume 5, Chapter 2, Section 4 that could be useful to the reader.

B. Instructor's Recommendation. The IACRA system itself does not require the instructor's signature to process the application; however, FAA policy does require the recommending instructor to enter his or her signature. In this case, the instructor will need access to IACRA to accomplish this task.

5-1372 AIRCRAFT DISPATCHER PTS. The FAA requires examiners to administer all Aircraft Dispatcher Practical Tests in accordance with the Aircraft Dispatcher PTS. While using the PTS, the examiner must evaluate the applicant's knowledge and skill in sufficient depth to determine that the applicant met the standards of performance listed for all "Tasks."

A. Introduction. The "Introduction" section of the Aircraft Dispatcher PTS contains general guidance, information, and examiner responsibilities. Examiners must review the "Introduction" section thoroughly and adhere to instructions contained therein.

B. Areas of Operation. "Areas of Operation" are phases of the practical test arranged in a logical sequence within the standard. They begin with "Flight Planning/Dispatch Release" and end with "Abnormal and Emergency Procedures." The examiner, however, may conduct the practical test in any sequence that will result in a complete and efficient test.

UNCONTROLLED COPY WHEN DOWNLOADED
Check with FSIMS to verify current version before using

C. Task. "Tasks" are titles of knowledge areas or procedures appropriate to an area of operation.

D. Plan of Action (POA). The examiner will develop a written POA for each Aircraft Dispatcher Practical Test he or she administers. The POA must include all required tasks in each area of operation. If the elements in one task have already been evaluated in another task, they need not be repeated. An examiner may change the sequence or combine tasks with similar objectives to conserve time. An examiner only needs to evaluate each element once if he or she has evaluated it sufficiently within a particular task. Examiners are expected to follow the POA; therefore, they must construct it in a manner that flows and is flexible enough to account for variables and unexpected situations, should they arise. A POA should account for any testing materials provided by the applicant in accordance with the PTS.

NOTE: Although the Aircraft Dispatcher PTS allows for utilization of different POAs, examiners should always administer tests in a manner that best illustrates a logical working flow of aircraft dispatcher duties and responsibilities as they would be at an air carrier. It is of the utmost importance that the examiner captures a logical workflow through the use of realistic scenarios in order to be able to evaluate the applicant's ability to perform the duties of an aircraft dispatcher with a high degree of safety.

E. Knowledge. In accordance with the Aircraft Dispatcher PTS, there is no formal division between the knowledge and skill portions of the practical test. Evaluation of applicants must be an ongoing process throughout the test. The examiner should use oral questioning prudently to determine the applicant's knowledge of tasks and related safety factors. Examiners must test to the maximum extent practicable the applicant's correlative abilities, rather than rote memorization of facts, throughout the practical test.

F. Skill. The skill portion of the Aircraft Dispatcher Practical Test is the phase where the applicant demonstrates the ability to complete several intricate manual calculations, including those necessary to prepare a manual flight plan. Once the applicant completes these calculations, examiners must test the applicant in his or her knowledge of the manual calculations involved through oral questioning. In accordance with the PTS, the skill portion of the test requires the following critical calculations (refer to the PTS for the full requirements):

- Preparation of a manual flight plan and dispatch release for a flight between authorized airports selected by the examiner;
- Preparation of a load manifest;
- Calculation of takeoff data; and
- Calculation of landing data.

G. Satisfactory Performance. In accordance with § 65.17, the minimum passing grade for the Aircraft Dispatcher Practical Test is 70 percent. Although calculating a test score for the practical test can be somewhat subjective, the Aircraft Dispatcher PTS defines satisfactory performance this way: "Satisfactory performance means that, in the judgment of the examiner, the applicant is able to demonstrate skill and correctly respond to the examiner's questions at least 70 percent of the time." Each examiner must have a method of determining this.

UNCONTROLLED COPY WHEN DOWNLOADED
Check with FSIMS to verify current version before using

H. Unsatisfactory Performance. Unsatisfactory performance is determined by the examiner. If, in the judgment of the examiner, the applicant does not meet the objectives of any task, or otherwise fails to correctly respond to the examiner's questions at least 70 percent of the time, the examiner will deem the applicant's performance to be unsatisfactory.

I. Typical Areas of Unsatisfactory Performance and Grounds for Disqualification. The PTS contains a list of typical areas of unsatisfactory performance and grounds for disqualification. Errors, lack of performance, and/or failures in these areas should be considered as grounds for failure of the entire Aircraft Dispatcher Practical Test.

- Failure to appropriately apply the conditions and limitations of any minimum equipment list (MEL)/Configuration Deviation List (CDL) item;
- Actions by the applicant that would constitute a violation of 14 CFR if the applicant were actually dispatching a flight;
- Exceeding any Airplane Flight Manual (AFM) limitation;
- Failure to comply with operations specifications (OpSpec); and
- Failure to properly interpret any Notices to Airmen (NOTAM).

J. Special Emphasis Areas. The Aircraft Dispatcher PTS lists several "Special Emphasis Areas." Examiners must place special emphasis upon areas that are most critical to dispatching and flight safety. Among these are:

- Positive operational control;
- Aircraft performance and driftdown;
- Weather requirements for departure/destination and alternate airports;
- Hazardous weather awareness, recognition, and avoidance;
- Aeronautical decision-making (ADM);
- Risk management procedures (RMP);
- Dispatch resource management (DRM); and
- Other areas deemed appropriate to any phase of the practical test.

NOTE: Although these areas may not be specifically addressed under each task, they are essential to dispatching and flight safety and must be evaluated during the practical test.

K. Equipment and Documents Required for the Practical Test.

1) Examiner's Responsibility. In accordance with the PTS, the examiner is responsible for supplying weather information and NOTAMs for the test when current weather information is not used.

2) Materials to be Supplied by the Applicant. In accordance with the PTS, the examiner determines what materials must be supplied by the applicant. Examiners must notify the applicant of what materials he or she is required to bring immediately upon the applicant scheduling the Aircraft Dispatcher Practical Test. The materials that an examiner may require the applicant to bring are listed in the PTS. An examiner may not require the applicant to bring more than what is required by the PTS.

UNCONTROLLED COPY WHEN DOWNLOADED
Check with FSIMS to verify current version before using

a) Applicant supplied materials must not include any device with an enabled internet connection and/or communication capability.

b) Applicant reference materials are prohibited. Applicant reference materials are not allowed unless those items are specifically listed in the Aircraft Dispatcher PTS. Examiners must not permit applicants to have any personal notes or documents in the testing area at any time during the Aircraft Dispatcher Practical Test.

5-1373 TESTING CONDITIONS AND LIMITATIONS. The conditions and limitations contained in this section apply to all examiners who administer the Aircraft Dispatcher Practical Test. There are additional responsibilities and limitations to which DADEs must abide, listed in Volume 13, Chapter 3, Section 2.

A. Verify English Language Skills. Prior to commencing the test, an examiner must make every attempt to establish an applicant's ability to read, speak, write, and understand the English language. Examiners must not test an applicant when it is apparent prior to testing that the applicant does not have the required English language skills. An applicant who does not demonstrate the ability to read, speak, write, and understand the English language is not eligible for an Aircraft Dispatcher Certificate or to take the Aircraft Dispatcher Practical Test.

1) Use the Current Edition of AC 60-28. In order to establish an applicant's English language skills, examiners will use the current edition of AC 60-28. The AC provides national standards on the basic requirements for pronunciation, structure, vocabulary, fluency, interaction, and comprehension.

2) Examiners Must Administer the Test in English. An examiner must administer the entire Aircraft Dispatcher Practical Test in English. There are no exceptions to this requirement. The use of any translation method or device is strictly prohibited.

3) Demonstration of Skills by the Applicant. During the test, the applicant must be able to demonstrate the ability to communicate clearly and concisely. The examiner should attempt to simulate the use of various methods of radio telephony communications such as telephone, satellite phone, and very high frequency (VHF) and high frequency (HF) radio. Aircraft dispatchers are required for all 14 CFR part 121 domestic and flag operations. When working for a part 121 domestic and/or flag air carrier, aircraft dispatchers are required to communicate critical information to PICs using these various methods of radio telephony communications. Examiners must be able to establish that an applicant is capable of clear and concise communication using any of these methods; otherwise, the examiner may not issue an Aircraft Dispatcher Certificate to the applicant.

4) Failure by the Applicant to Demonstrate English Language Skills During the Test. If an examiner initially determines that an applicant has demonstrated adequate English language skills prior to testing, but ultimately discovers during the test that the applicant's English language skills are not actually adequate, the examiner must consider the applicant to have failed the test. In such a case, the examiner will follow the policy regarding "Unsuccessful Applicants" in paragraph 5-1378. An examiner must conduct the Aircraft Dispatcher Practical Test entirely in the English language. The use of a translator during the test is not permitted.

UNCONTROLLED COPY WHEN DOWNLOADED
Check with FSIMS to verify current version before using

B. No More Than Two Tests Per Day. An examiner must not administer more than two full Aircraft Dispatcher Practical Tests per day. (DADEs refer to Volume 13, Chapter 3, Section 2).

C. Single Applicant Only. An examiner must not administer the Aircraft Dispatcher Practical Test to more than one applicant at a time. For the purposes of this policy, "at a time" means that an examiner must initiate, conduct, and conclude the practical test with an applicant before accepting the application and/or initiating the test with another applicant. An Aircraft Dispatcher Practical Test is concluded when the examiner issues a Temporary Airman Certificate, a Notice of Disapproval, a Letter of Discontinuance, or for an applicant under the age of 23, issues a Letter of Aeronautical Competency. (DADEs complete the test and refer the applicant to the managing office for a Letter of Aeronautical Competency.)

D. Give Undivided Attention to the Applicant Throughout the Conduct of the Test. Examiners must give the applicant undivided attention during the entire test. This includes those times where the applicant is making manual calculations and completing the manual flight plan.

E. No Applicant Notes. Examiners must not permit applicants to have any notes or documents in the testing area other than those specifically listed in the current edition of FAA-S-8081-10, Aircraft Dispatcher Practical Test Standards.

F. Certain Electronic Devices are Prohibited. Applicant use of devices with an internet connection and/or communication capability is strictly prohibited during testing.

G. No Instruction During Testing. Examiners must not provide the applicant with any instruction during the practical test. If the applicant requires instruction, then it's possible that the applicant is struggling in a particular area and could fail the test.

H. Administer Aircraft Dispatcher Practical Test in Accordance with the Full Requirements of the PTS. An examiner must administer the Aircraft Dispatcher Practical Test in accordance with the PTS. Examiners may not exempt an applicant from any portion of the PTS requirements.

I. Do Not Temporarily Suspend (Discontinue) a Test to Allow the Applicant to Study. An examiner may not discontinue a test to allow an applicant time to study. If an applicant appears deficient in a particular task or area of knowledge, then the examiner must treat that as unsatisfactory performance and either continue the test if it appears the applicant will be able to pass the test overall, or fail the applicant.

J. Policy Regarding Observers. Generally, observers must not be present during the conduct of the Aircraft Dispatcher Practical Test.

1) At no time will an examiner allow another applicant for an Aircraft Dispatcher Certificate to observe or be present in the same room or testing area during the conduct of the Aircraft Dispatcher Practical Test.

2) An FAA managing specialist may always observe a DADE conducting the Aircraft Dispatcher Practical Test.

UNCONTROLLED COPY WHEN DOWNLOADED
Check with FSIMS to verify current version before using

3) No other observers are allowed to monitor the test without permission from the managing specialist.

5-1374 ADMINISTER THE AIRCRAFT DISPATCHER PRACTICAL TEST.

A. Test Time. In accordance with the Aircraft Dispatcher PTS, an examiner should allot, on average, no less than 4 hours and no more than 6 hours to conduct a test. The PTS requirements are extensive, and examiners must ensure that they thoroughly administer the test. An applicant's ability to complete any portion of the test in a reasonable amount of time must be part of the examiner's evaluation criteria. Inability by an applicant to complete the Aircraft Dispatcher Practical Test in a timely manner may be an indication that the applicant lacks the ability to manage his or her workload. Workload management is a critical element of performing the duties of an aircraft dispatcher.

B. Test Scenarios. The examiner will develop at least three flight plan test scenarios, which use actual operational data to simulate irregular operations and non-normal situations. Developing multiple scenarios allows the examiner to choose which scenario he or she will use for a particular test, and it prevents applicants from sharing test information with another applicant. Examiners will update the scenarios as necessary at least once a year and will provide at least the following items to the applicant:

- Weather, including Aviation Routine Weather Reports (METAR), Terminal Aerodrome Forecasts (TAF), Winds Aloft, appropriate charts, and Pilot Weather Reports (PIREP);
- NOTAMs;
- The authorized airports upon which the manual flight plan will be calculated; and
- The Weight and Balance (W&B) Form for the appropriate aircraft.

NOTE: Refer to the Aircraft Dispatcher PTS for student supply requirements.

C. Testing Facility. The examiner must ensure that the testing facility meets requirements equivalent to those required by § 65.65 and Volume 3, Chapter 63, Section 3. The facility must be private, be free from distractions, and provide the applicant with sufficient space to complete the skill portions of the Aircraft Dispatcher Practical Test. The testing facility must be equipped with writing surfaces (e.g., desks, tables, etc.) that provide the applicant with sufficient space to use all necessary testing materials such as aeronautical en route charts and AFMs.

5-1375 EVALUATION OF THE APPLICANT. Examiners will evaluate each applicant in accordance with the requirements of the Aircraft Dispatcher PTS. Each examiner is responsible for determining that the applicant demonstrates acceptable knowledge and skill for each task within the PTS. An examiner must test to the greatest extent practicable the applicant's correlative abilities, rather than rote memorization of facts, throughout the practical test. If an examiner determines that a task is incomplete or the outcome is uncertain, he or she may require the applicant to repeat that task or portions of it. An examiner must not provide instruction to the applicant or allow the applicant to practice for the purposes of successfully completing any task.

UNCONTROLLED COPY WHEN DOWNLOADED
Check with FSIMS to verify current version before using

Examiners must inform applicants of the level of performance expected before beginning the test.

5-1376 SUCCESSFUL APPLICANTS. When an applicant has passed the Aircraft Dispatcher Practical Test, accomplish the following, according to the applicant's age.

A. Applicants 23 Years of Age or Older. Successful applicants who have passed the Aircraft Dispatcher Practical Test and are 23 years of age or older are entitled to a Temporary Airman Certificate (FAA Form 8060-4). Complete the application as follows:

1) Prepare the Application for an Airman Certificate and/or Rating (FAA Form 8400-3). ASI-ADs who are examiners, DADEs, and the managing specialist of the DADE must complete FAA Form 8400-3 as follows:

a) An examiner who is an ASI-AD will complete the following sections of FAA Form 8400-3:

- Section 8, Evaluation Record;
- Section 9, Inspector's Record;
- Section 10, Practical Test Report; and
- Remarks section, as applicable.

b) If the examination was administered by a DADE, the DADE should have completed the following sections of FAA Form 8400-3:

- Section 8,
- Section 10, and
- Remarks section, as applicable.

c) The managing specialist of the DADE will complete section 9 of FAA Form 8400-3.

1. Select either "Temporary Airman Certificate Issued" or "Notice of Disapproval of Application Issued," as appropriate.

2. Select "Examiner's Action Accepted" (unless the managing specialist intends to reject the DADE's actions).

3. Enter signature, date, and FAA office information.

4. Select "Aircraft Dispatcher" located under the box provided for the FAA office information.

2) Issue FAA Form 8060-4. An ASI-AD will issue the Temporary Airman Certificate in duplicate (see Volume 5, Chapter 1, Section 5 for instructions on completing this form) and give a copy to the applicant. A DADE may only issue a Temporary Airman Certificate if permitted in the DADE's FAA letter of authority (LOA) (see also Volume 13, Chapter 3, Section 1.)

UNCONTROLLED COPY WHEN DOWNLOADED
Check with FSIMS to verify current version before using

3) Forward the Application Package. Airman application packages must be forwarded to the Airmen Certification Branch (AFB-720) in Oklahoma City, OK for processing. These include:

- The completed FAA Form 8400-3;
- An original copy of FAA Form 8060-4;
- The original Airman Knowledge Test Report; and
- A copy of the written statement of graduation (the applicant retains the original) if the applicant has successfully completed an FAA-approved Aircraft Dispatcher Certification Course.

NOTE: If using IACRA, the forwarding of the application package is done automatically through that system.

B. Applicants Under the Age of 23. An applicant under the age of 23 is not entitled to a Temporary Airman Certificate until he or she reaches his or her 23rd birthday. An ASI-AD or the managing specialist of a DADE will issue a Letter of Aeronautical Competency on FAA letterhead to an applicant who has passed the Aircraft Dispatcher Practical Test but is under 23 years of age. The Letter of Aeronautical Competency must contain the statement that the applicant has met all of the requirements for an Aircraft Dispatcher Certificate except for age (see Figure 5-215 for a sample letter).

C. The Examiner Must Inform the Applicant of the Requirement to Present the Letter of Aeronautical Competency in Person to a Flight Standards Office. An examiner must inform the applicant that he or she will be required to present the letter in person to a Flight Standards office once the applicant has reached the age of 23. Also inform the applicant that the FAA will require a positive identification check before issuing a Temporary Airman Certificate; therefore, the applicant must bring the appropriate identification (see paragraph 5-1369 for identification requirements). Examiners should also inform the applicant that it is in his/her best interest to exchange the Letter of Aeronautical Competency as soon as possible after reaching the age of 23. This will help ensure an expeditious and uncomplicated exchange.

1) Prepare FAA Form 8400-3. Complete sections 8 and 10 of the form and enter the following statement into the Remarks section of the form:

a) An examiner who is an ASI-AD will enter the following statement: APPLICANT IS UNDER THE AGE OF 23. HOLD APPLICATION. LETTER OF AERONAUTICAL COMPETENCY ISSUED.

b) An examiner who is a DADE will enter the following statement: THE APPLICANT IS UNDER THE AGE OF 23, AND WILL REQUIRE A LETTER OF AERONAUTICAL COMPETENCY TO BE ISSUED BY THE MANAGING FAA OFFICE.

2) Forward the Application Package. Application packages for applicants under the age of 23 must be forwarded to AFB-720 as follows:

UNCONTROLLED COPY WHEN DOWNLOADED
Check with FSIMS to verify current version before using

- The completed FAA Form 8400-3, with the completed Remarks section;
- The original Airman Knowledge Test Report;
- A copy of the written statement of graduation (the applicant retains the original) if the applicant has successfully completed an FAA-approved part 65 Aircraft Dispatcher Certification Course; and
- A copy of the Letter of Aeronautical Competency.

NOTE: As of the date of publication of this section, the IACRA application cannot be used to process application packages for applicants under the age of 23.

3) Issue a Certificate When the Applicant is at Least 23 Years of Age. Once the applicant has reached the age of 23, he or she must go to a Flight Standards office and present the following documents in exchange for a Temporary Airman Certificate:

- The original Letter of Aeronautical Competency;
- Proof of age;
- Any other identification required by paragraph 5-1369; and
- An updated FAA Form 8400-3.

a) Letters of Aeronautical Competency do not expire. However, prior to issuing a Temporary Airman Certificate in exchange for a Letter of Aeronautical Competency, the ASI issuing the certificate must contact AFB-720 to verify that the applicant's original application is on file. Information on how to contact AFB-720 is located on the FAA public website at http://www.faa.gov/licenses_certificates/airmen_certification/.

b) If AFB-720 does not have the original application package, cannot reconstruct the application file, or otherwise states that the applicant should not be issued a certificate, the ASI will attempt to contact the Flight Standards office that issued the original Letter of Aeronautical Competency to see if that office has the original application package or other information, such as PTRS activities, that could help reconstruct the application file. Otherwise, the ASI will instruct the applicant that a Temporary Airman Certificate cannot be issued and that the applicant will have to requalify for an Aircraft Dispatcher Certificate, in accordance with § 65.57.

c) If AFB-720 indicates that they have, or are able to reconstruct, the original application package and there is nothing that should otherwise prevent the issuance of a Temporary Airman Certificate, the ASI will issue the Temporary Airman Certificate and forward the updated application package to AFB-720. The package must contain:

- The completed FAA Form 8400-3,
- The original Letter of Aeronautical Competency, and
- The original copy of FAA Form 8060-4.

UNCONTROLLED COPY WHEN DOWNLOADED
Check with FSIMS to verify current version before using

5-1377 PTRS ENTRIES. Each activity associated with the Aircraft Dispatcher Practical Test must be recorded in the PTRS. The PTRS activity code will depend on who actually administered the Aircraft Dispatcher Practical Test and the age of the applicant. DADEs will complete PTRS entries manually if instructed by the FAA managing specialist. ASI-ADs and managing specialists will complete PTRS entries in the Enhanced Flight Standards Automation System (eFSAS).

NOTE: When using IACRA, some PTRS entries may be automatic through that application.

A. Applicants 23 Years of Age or Older.

1) If the test was administered by an ASI-AD, that individual will complete PTRS activity code 1524 (CERT/AIRM/DISPATCHER). The ASI-AD will need to indicate if the applicant passed or failed the test by checking the appropriate box while entering the PTRS data.

2) If the test was administered by a DADE, the FAA managing specialist will complete PTRS activity code 1563 (CERT/EXMNR/REVW EXMNR/APD/TCE/F).

3) The PTRS entries for activities 1524 and 1563 are similar. Complete the appropriate sections of the electronic PTRS Data Sheet utilizing the information contained in the completed FAA Form 8400-3 and the manual FAA Form 8000-36 completed by the DADE, when provided. Enter the relevant information, based on whether the test was administered by the ASI-AD or the DADE.

a) Check the appropriate box for “Pass” or “Fail,” depending upon whether or not the applicant passed or failed the practical test.

b) Enter “1524/65,” which corresponds to the Aircraft Dispatcher Practical Test, in the field titled “Exam Kind.”

c) Check the box titled “Observed by Inspector” only when the managing specialist has observed the DADE administering the test.

d) Enter any comments as appropriate by expanding the “Comments” area and clicking on the “Add New Comment” bar.

e) Select “J-Crewmembers” from the “Primary Area” drop-down menu.

1. If a DADE administered the test, select code “783” for Designees in the “Keyword” drop-down menu.

2. If the ASI-AD administered the test, select code “499,” Other Remarks–Training, in the “Keyword” drop-down menu.

f) Enter your “Opinion Code” and comments, as appropriate.

UNCONTROLLED COPY WHEN DOWNLOADED
Check with FSIMS to verify current version before using

B. Applicants Under 23 Years of Age.

1) If the Aircraft Dispatcher Practical Test was administered by an ASI-AD, that individual will complete PTRS activity code 1513 (CERT/AIRM/DISP/LTR/COMPTENCY).

2) If the test was administered by a DADE, the FAA managing specialist will complete activity code 1563 in accordance with subparagraph 5-1377A2). The specialist must also complete activity code 1513.

3) When completing activity code 1513, use the same "Primary Area" and "Keyword" selections you would use if completing activity code 1524 or 1563.

NOTE: There are multiple selections in eFSAS for a Letter of Aeronautical Competency under activity code 1513. In order to access the correct one, use the search function by clicking on the symbol of the binoculars located to the right of the "Activity Num" field. Once the search is enabled, enter "1513" in the "Code" section of the purple highlighted field. Then select "CERT/AIRM/DISP/LTR COMPTENCY."

5-1378 UNSUCCESSFUL APPLICANTS. If an applicant fails the Aircraft Dispatcher Practical Test, the examiner will accomplish the following:

A. Prepare FAA Form 8400-3. Prepare FAA Form 8400-3 and record the results of the practical test in the "Practical Test Report" (section 10). Annotate each unsatisfactory subject area with a "U" in the appropriate subject areas. If the unsuccessful applicant has satisfactorily completed any subject areas, the examiner may note those with an "S" for satisfactory.

B. Return the Original Written Test Report. The examiner will return the original written test report to the applicant and instruct the applicant to retain it for future presentation to an examiner when retesting.

NOTE: The applicant always retains the original written statement of graduation.

C. Prepare the Notice of Disapproval—FAA Form 8060-5. The examiner will complete FAA Form 8060-5, in duplicate, and give the original to the applicant. Volume 5, Chapter 1, Section 6 contains instructions on completing the form and contains a sample of a completed form. The examiner will instruct the application to retain the Notice of Disapproval for future presentation to an examiner when retesting.

D. Forward the Application Package. Forward application packages for unsuccessful applicants to AFB-720 and include the following documents:

- The completed FAA Form 8400-3, and
- A duplicate of FAA Form 8060-5.

5-1379 RETESTING AFTER FAILURE. In accordance with § 65.19, an applicant may retest after failing the Aircraft Dispatcher Practical Test as follows:

UNCONTROLLED COPY WHEN DOWNLOADED
Check with FSIMS to verify current version before using

- Thirty days after the date the applicant failed the test; or
- Before the 30 days have expired if the applicant presents a signed statement from an airman who holds an Aircraft Dispatcher Certificate certifying that the airman has given the applicant additional instruction in each of the subjects failed and the airman considers the applicant ready for retesting.

A. Application. Each applicant for a retest must complete and sign FAA Form 8400-3.

B. Airman Knowledge Test. Each applicant for a retest must present an original, embossed Airman Knowledge Test Report showing satisfactory test results.

C. Statement of Graduation (if Applicable). Each applicant for a retest must present a copy of a statement of graduation if he or she has successfully completed an FAA-approved part 65 dispatcher training course.

D. Original Copy of the Notice of Disapproval of Application (FAA Form 8060-5). Each applicant for a retest must present an original copy of FAA Form 8060-5. The form should contain the list of the subjects failed by the applicant; otherwise, the retest must be administered in its entirety.

E. Time Period for Retest.

1) An applicant may only be retested within the validity period of a statement of graduation issued in accordance with § 65.70(b); and

2) An applicant may only be retested within 24 months of having passed the ADX Knowledge Test in accordance with § 65.55(b).

F. Tasks and Areas to Retest. An examiner may credit an applicant for those areas of operation and the associated tasks that have been performed satisfactorily on the previous test under the following conditions:

1) Retesting Within 30 Days After the Date of Failure. An examiner administering a retest may give the applicant credit for those areas and/or tasks completed satisfactorily on the previous test. If testing within 30 days of failure, § 65.19 requires an applicant to present a signed statement from an airman who holds an Aircraft Dispatcher Certificate. In the statement, the airman must certify that he or she has given the applicant additional instruction in each of the areas and/or tasks previously failed by the applicant, and that he or she considers the applicant ready for retesting. The certifying statement must include the airman's Aircraft Dispatcher Certificate number. In addition, the certifying instructor must sign the "Instructor's Recommendation" block (block 7) of FAA Form 8400-3. The certifying statement and the signed FAA Form 8400-3 must be part of the certification application package for the retest. A certifying statement of this nature does not relieve an examiner from his or her duty to thoroughly evaluate an applicant. If the examiner doubts the applicant's competency in any area or task, the examiner will retest the applicant in any and all areas and tasks the examiner sees fit.

UNCONTROLLED COPY WHEN DOWNLOADED
Check with FSIMS to verify current version before using

2) Retesting After 30 Days but No More than 60 Days From the Date of Failure. Examiners should exercise caution when retesting an applicant who is applying for a retest after 30 days from failing the Aircraft Dispatcher Practical Test. Section 65.19 contains no requirement for an applicant to receive additional instruction if he or she applies for a retest 30 days after he or she failed the test. An examiner administering a retest may give the applicant credit for those areas and tasks completed satisfactorily on the previous practical test(s) if the retest occurs within 60 calendar-days of the original test. However, an examiner may also choose to retest an applicant on any and all areas and/or tasks if the examiner doubts the applicant's competence in any area or task that was performed satisfactorily on the previous test. Whether or not a task or area needs to be retested is at the examiner's discretion.

3) Retesting After 60 Days From the Date of Failure. An applicant who desires a retest after 60 calendar-days from having failed the Aircraft Dispatcher Practical Test is not entitled to any credit for tasks or areas previously passed. In this case, the examiner must administer the entire Aircraft Dispatcher Practical Test.

G. Retesting an Applicant Who has Qualified for Testing Under the Provisions of § 65.57(a)(4) is Prohibited. In accordance with subparagraph 5-1368F3), an examiner requires prior approval from AFS-200 in order to administer the Aircraft Dispatcher Practical Test to any applicant who provides documentary evidence in accordance with § 65.57(a)(4) as a means to qualify for testing. If the applicant fails the Aircraft Dispatcher Practical Test on the first attempt, AFS-200 will not grant approval to an examiner to administer a retest. In this case, in order to qualify for further testing:

1) The applicant would need to gain the necessary experience in order to satisfy the requirements of § 65.57(a)(1), (2), or (3); or

2) Successfully complete an FAA-approved Aircraft Dispatcher Certification Course in accordance with the requirements of § 65.57(b).

H. Forward the Retest Application Package. If the applicant passes the retest, the examiner and FAA managing specialist will forward the application package in accordance with the guidance section applicable to successful applicants.

5-1380 DISCONTINUATION OF THE PRACTICAL TEST.

A. Letter of Discontinuance. An examiner will issue a Letter of Discontinuance when reasons other than unsatisfactory performance lead to the termination of a practical test. Some examples of reasons for discontinuing a test include, but are not limited to:

- Power failure,
- Family emergency,
- Inclement weather, and
- Illness.

UNCONTROLLED COPY WHEN DOWNLOADED
Check with FSIMS to verify current version before using

NOTE: Poor performance by an applicant is not a valid reason to discontinue a test. Poor performance is considered grounds for failure of the Aircraft Dispatcher Practical Test.

B. Issue the Letter of Discontinuance. When an examiner discontinues the test for reasons other than unsatisfactory performance, he or she will prepare, sign, and issue a Letter of Discontinuance to the applicant and return FAA Form 8400-3, the original Airman Knowledge Test Report, and statement of graduation (when applicable) to the applicant. A copy of the Letter of Discontinuance must be retained by the examiner and made part of an applicant's certification file and a DADE's designated examiner file (when the test is administered by a DADE). The examiner will identify in the Letter of Discontinuance all areas and associated tasks successfully completed by the applicant. The examiner will instruct the applicant to present the Letter of Discontinuance when he or she resumes the Aircraft Dispatcher Practical Test. The applicant should resume the test with the same examiner; however, in unusual circumstances such as prolonged illness of the previous examiner, the test may be continued with another examiner (ASI-AD or DADE). At no time will an examiner issue a Letter of Discontinuance in lieu of a Notice of Disapproval of Application, when it appears an applicant may fail any portion of the Aircraft Dispatcher Practical Test.

C. Valid Time. A Letter of Discontinuance is valid for no more than 60 days from the date the test was discontinued and the letter was issued. After 60 days from the issuance of the Letter of Discontinuation, an applicant is no longer entitled to credit for any areas or tasks previously satisfied during the initial test. In addition to the maximum of 60 days valid time of a Letter of Discontinuance, examiners must adhere to the following time limits:

1) The test must be continued within the validity period of a statement of graduation (when issued) in accordance with § 65.70(b).

2) The test must be continued within 24 months of the applicant having passed the ADX Knowledge Test in accordance with § 65.55(b).

D. Tasks and Areas to Continue. When continuing a practical test, examiners will credit the applicant for the successful completion of the areas and tasks listed in the Letter of Discontinuance. If an examiner doubts the applicant's knowledge or competence in any area or task previously satisfied during the initial test, the examiner may retest the applicant to the extent the examiner deems necessary. When the Aircraft Dispatcher Practical Test is completed, the examiner will include a copy of the Letter of Discontinuance with the application package and forward it to AFB-720. See Figure 5-216 for an example of a Letter of Discontinuance.

UNCONTROLLED COPY WHEN DOWNLOADED
Check with FSIMS to verify current version before using

Figure 5-214. Sample Practical Test Tracking Form

Practical Test Tracking Form

Applicant's Name		**Examination**		**Course Operator**	**Comments**	**Results**	
		Re-exam Yes/No	Date Given			Sat	Unsat
1							
2							
3							
4							
5							
6							
7							
8							
9							
10							
11							
12							
13							
14							
15							

UNCONTROLLED COPY WHEN DOWNLOADED
Check with FSIMS to verify current version before using

Figure 5-215. Sample Letter of Aeronautical Competency—Successful Applicant of Aircraft Dispatcher Certificate Less Than 23 Years of Age

[Flight Standards Office Letterhead]

Letter of Aeronautical Competency

This letter is evidence that:

[Name of applicant] has satisfied the eligibility requirements for an Aircraft Dispatcher Certificate, in accordance with Title 14 of the Code of Federal Regulations (14 CFR) part 65, § 65.53, with the exception that the applicant is under the age of 23. Upon reaching 23 years of age, the applicant may obtain a Temporary Airman Certificate (FAA Form 8060-4) from a Federal Aviation Administration (FAA) Flight Standards Office. The applicant must appear in person and present the following:

1) Proof of age (at least 23 years old);

2) A current application, FAA Form 8400-3, Application for an Airman Certificate and/or Rating;

3) This original letter; and

4) Valid photo identification. [Non-U.S. citizens are required to have two valid forms of photo identification. If the applicant is a non-U.S. citizen, state this requirement here.]

Aviation Safety Inspector Signature:_____

Aviation Safety Inspector Name (print):_____

Date:_____

Flight Standards Office Number:_____ Office Location:_____

This Letter of Aeronautical Competency does not expire.

UNCONTROLLED COPY WHEN DOWNLOADED
Check with FSIMS to verify current version before using

Figure 5-216. Sample Letter of Discontinuance

Dear_____,

On this date, _____, you successfully completed a portion of the Aircraft Dispatcher Practical Test indicated below:

You have successfully completed the following areas of the Aircraft Dispatcher Practical Test:

[List successfully completed Areas of Operation and associated Tasks from the Practical Test Standards.]

_____

_____

_____

_____

_____

_____

_____

_____

The practical test was discontinued because of: [state reason]_____

You may present this letter no later than [enter 60 days from the date of the initiation of the test (same as date entered at the beginning of the letter)] as proof of your successful completion of the Areas of Operation and associated Tasks listed above. After [enter expiration date], you will be required to complete the Aircraft Dispatcher Practical Test in its entirety. This letter does not extend the expiration date of your Aircraft Dispatcher Knowledge Test results or statement of graduation issued by [enter the name of the FAA-approved part 65 Aircraft Dispatcher Certification Course, if applicable].

Sincerely,

_____[ASI-AD or DADE]_____ Certificate/Designation Number:_____

RESERVED. Paragraphs 5-1381 through 5-1385.

UNCONTROLLED COPY WHEN DOWNLOADED
Check with FSIMS to verify current version before using

VOLUME 5 AIRMAN CERTIFICATION

CHAPTER 13 ADDITIONAL AIRCRAFT TYPE SPECIFIC TRAINING

Section 2 Approval or Renewal of a Mitsubishi MU-2B Series Aircraft Training Program

5-13-2-1 PROGRAM TRACKING AND REPORTING SUBSYSTEM (PTRS) ACTIVITY CODE. 1220.

5-13-2-3 OBJECTIVE. This section provides guidance for inspectors to determine whether a Mitsubishi MU-2B training program, submitted by a Title 14 of the Code of Federal Regulations (14 CFR) part 91 training provider, meets the requirements of part 91 subpart N. Successful completion of this task results in the issuance, amendment, renewal, or denial of approval to conduct Mitsubishi MU-2B training. Inspectors issue approval to part 91 training providers via a letter of authorization (LOA) using the Web-based Operations Safety System (WebOPSS) paragraph T309 (see Figure 5-13-2A, Sample LOA T309, Authorization for Use of an Approved MU-2B Training Program: 14 CFR Part 91 Operations). Inspectors issue approvals for training under 14 CFR parts 91 subpart K (91K), 121, 125, 135, 141, and 142 using the normal approval process.

NOTE: Mitsubishi MU-2B training conducted under parts 91K, 121, 125, 135, 141, and 142 must meet the requirements of part 91 subpart N.

NOTE: Advisory Circular (AC) 91-89, Mitsubishi MU-2B Training Program, describes an acceptable means, but not the only means, of meeting the requirements of part 91 subpart N.

5-13-2-5 GENERAL.

A. LOA Guidance. Volume 3, Chapter 2, Section 2 provides general guidance regarding the part 91 LOA process.

B. Background.

1) In 2008, the Federal Aviation Administration (FAA) published Special Federal Aviation Regulation (SFAR) No. 108, Mitsubishi MU-2B Series Airplane Special Training, Experience, and Operating Requirements, to mandate flight training and experience requirements for operators of the Mitsubishi Heavy Industries, Ltd. (MHI) MU-2B twin turboprop aircraft. Following the issuance of SFAR No. 108, Mitsubishi Heavy Industries America, Inc. (MHIA) began an evaluation to identify errors in flight profiles published in SFAR No. 108.

2) In 2012, the FAA revised its stall recognition and recovery procedures for all aircraft and training programs by removing the emphasis from ensuring a “minimum loss of altitude” while performing stall training maneuvers to emphasizing a positive reduction in angle of attack (AOA) as the proper stall recovery method. At that time, the FAA had set forth to amend SFAR No. 108 due to the inaccuracies contained in the SFAR.

UNCONTROLLED COPY WHEN DOWNLOADED
Check with FSIMS to verify current version before using

3) On September 7, 2016, the FAA promulgated a new part 91 subpart N (81 FR 61583, MU-2B Series Airplane Training Requirements Update). This action relocated and updated the content of SFAR No. 108 to the newly promulgated part 91 subpart N in order to improve the safety of operating the MHI MU-2B series airplane.

C. Requirements of Key Personnel.

1) Responsible Person. The Responsible Person for an MU-2B training program must be an individual person who is the training provider or, if the training provider is a legal entity, an officer, employee, or person with whom that entity has contracted to act on behalf of the legal entity with respect to the MU-2B training program authorization. This person must be a U.S. citizen or a person who holds a U.S. pilot certificate, and must accept responsibility for ensuring the training provider complies with the approved training program, the training program authorization, and all other applicable regulations.

2) Training Provider. Training providers authorized to provide MU-2B training under part 91 subpart N must meet the requirements of part 91, § 91.1709.

3) Authorized Flight Instructor. Flight instructors authorized to conduct MU-2B flight training under part 91 subpart N must meet the requirements of § 91.1713.

5-13-2-7 PREREQUISITES AND COORDINATION REQUIREMENTS.

A. Prerequisites. This task requires knowledge of the regulatory requirements of part 91 and FAA policies, and qualification as an aviation safety inspector (ASI) (Operations).

B. Coordination. This task requires coordination with the Commercial Operations Branch (AFS-820).

5-13-2-9 REFERENCES, FORMS, AND JOB AIDS.

A. References (current editions):

- Part 91 Subpart N.
- AC 91-89, Mitsubishi MU-2B Training Program.
- Safety Alert for Operators (SAFO) 16003, Requirement to Use Federal Aviation Administration (FAA) Accepted Checklists for Mitsubishi Heavy Industries America (MHIA), Inc. MU-2B Series Airplanes.

B. Forms. WebOPSS LOA T309, Authorization for Use of an Approved MU-2B Training Program.

C. Job Aids:

- Figure 5-13-2A, Sample LOA T309, Authorization for Use of an Approved MU-2B Training Program.
- Figure 5-13-2B, Letter Disapproving a Mitsubishi MU-2B Series Aircraft Training Program.

UNCONTROLLED COPY WHEN DOWNLOADED
Check with FSIMS to verify current version before using

- Figure 5-13-2C, Letter Disapproving a Request to Renew a Mitsubishi MU-2B Series Aircraft Training Program.
- Figure 5-13-2D, Letter Disapproving a Request to Amend a Mitsubishi MU-2B Series Aircraft Training Program.
- Figure 5-13-2E, Letter Informing a Training Provider to Change Their Training Program.
- Figure 5-13-2F, Letter Canceling Approval of a Mitsubishi MU-2B Series Aircraft Training Program.

5-13-2-11 APPROVAL PROCESS.

A. Approval for Training Providers Under Part 91.

1) Operators must submit their proposed MU-2B training programs to the responsible Flight Standards District Office (FSDO) having jurisdiction over the area where the operator's principal business office is located. The training program application package must specify the complete legal name, physical address, and telephone number of the training provider, and the full name, email address, and telephone number of the Responsible Person. The responsible FSDO will forward these packets to AFS-820 for review. After AFS-820 conducts its review to ensure compliance with part 91 subpart N, it will issue a recommendation of approval or disapproval to the responsible FSDO. If AFS-820 recommends disapproval, the responsible FSDO will not issue LOA T309 without further conferring with AFS-820 and will notify the part 91 training provider of the disapproval by formal letter (see Figure 5-13-2B, Letter Disapproving a Mitsubishi MU-2B Series Aircraft Training Program).

2) The responsible FSDO should submit these training programs to AFS-820 in electronic form via email at 9-AFS-800-Correspondence@faa.gov. Electronic submissions are the preferred submission method. Due to FAA server limitations, large submissions may be broken into multiple files. Hardcopy submissions can be mailed to: Federal Aviation Administration, Commercial Operations Branch, AFS-820, 800 Independence Avenue SW, Washington, DC 20591.

3) If a proposed MU-2B training program differs substantially from the training program curriculum presented in AC 91-89, Appendix A, MU-2B Training Program, AFS-820 will coordinate with the Small Aircraft Aircraft Evaluation Group (AEG) prior to recommending approval or disapproval. Personnel submitting these proposed training programs should be aware that this may delay approval.

4) The proposed MU-2B training program must include factory type design differences training as specified in part 91 subpart N, as applicable to the training and/or operation. The FAA recommends that where MU-2B differences training, in addition to factory type design differences training, is applicable to training and/or operation, the differences training specified in the MU-2B series Flight Standardization Board (FSB) report be included in the training provider's proposed MU-2B training program.

UNCONTROLLED COPY WHEN DOWNLOADED
Check with FSIMS to verify current version before using

5) AFS-820 will notify the responsible FSDO of the recommended approval or disapproval of the training program. If AFS-820 recommends approval, the responsible FSDO will issue LOA T309 as follows:

a) Adding an operator to WebOPSS: If a part 91 training provider is not already established in WebOPSS, general instructions for adding an operator to WebOPSS can be found in the WebOPSS Field User Guide.

b) Required LOAs: When issuing LOA T309 via WebOPSS, at a minimum, LOAs A001 and A004 must be issued to the training provider.

6) Prior to issuing LOA T309, ASIs will verify the training provider uses a cockpit checklist, as specified in § 91.1721.

7) The ASI will prepare the appropriate sections of LOA T309. An ASI may sign on behalf of the responsible FSDO manager or supervisor, provided this privilege has been delegated to the ASI.

8) ASIs will use PTRS code 1220 for the issuance of the LOA. When completing the PTRS record, inspectors should enter "MU2TP" in the "National Use" field.

9) Update or add the training provider to the enhanced Vital Information Database (eVID) as a noncertificated operator. General instructions for updating or adding a noncertificated operator can be found in the Enhanced Flight Standards Automation System (eFSAS) eVID User Manual and the Vital Information Subsystem Procedures Manual (VPM). Use activity code "AH" (Authorization Holder). Specify aircraft as MU-2B with the appropriate series of the aircraft or simulator that is used in training.

B. Approval for Operators and Training Providers Under Parts 91K, 121, 125, 135, 141, and 142.

1) Issuance of LOA T309 is not applicable to any operators conducting operations under part 91K, 121, 125, 135, 141, or 142. These operators and training providers will submit their proposed training program or course to their principal operations inspector (POI) or Training Center Program Manager (TCPM), as applicable, for review and approval as normal.

2) POIs and TCPMs must ensure the proposed training program meets the standards of part 91 subpart N.

5-13-2-13 TRAINING PROGRAM DENIAL. Inspectors issue denials using a letter of disapproval (see Figure 5-13-2B).

5-13-2-15 RENEWAL, AMENDMENT, AND CANCELLATION.

A. Renewal. The LOA T309 expires at the end of the 24th month after the month of issuance. The training provider must meet the same requirements for renewal as for original certification. The training provider should request, in writing, a renewal of the LOA at least

UNCONTROLLED COPY WHEN DOWNLOADED
Check with FSIMS to verify current version before using

45 days prior to the expiration of its current LOA. Upon the receipt of a request for renewal, the responsible FSDO will follow the approval process specified in paragraph 5-13-2-11.

B. Amendment. An amendment is acceptable for two instances: when a training provider wishes to amend its program and when the training requirements change.

1) When a training provider wishes to amend its training program, it should send a written request to the responsible FSDO explaining the changes it is requesting. The responsible FSDO will process amendments following the approval process specified in paragraph 5-13-2-11.

2) When the base training requirements change due to a revision to AC 91-89, the responsible FSDO will inform the training provider of any necessary amendments to the training program (Figure 5-13-2E, Letter Informing a Training Provider to Change Their Training Program). The training provider will have 30 days to submit, in writing to the responsible FSDO, the appropriate changes to the training program. The responsible FSDO will process amendments following the approval process specified in paragraph 5-13-2-11.

C. Change of Responsible Person. If the Responsible Person named on the LOA relinquishes responsibility, the LOA becomes void. The training provider may apply for a new LOA with a new named Responsible Person. If the training program has not changed, the responsible FSDO may issue a new LOA without AFS-820 coordination.

D. Cancellation. The FSDO may cancel an approved LOA if the training provider fails to comply with the requirements specified in part 91 subpart N or if the training provider requests cancellation of its LOA. The training provider must be notified in writing, explaining the reason for the cancellation (see Figure 5-13-2F, Letter Canceling Approval of a Mitsubishi MU-2B Series Aircraft Training Program).

Figure 5-13-2A. Sample LOA T309, Authorization for Use of an Approved MU-2B Training Program: 14 CFR Part 91 Operations

1. The training provider, [Label], is authorized to conduct the Mitsubishi MU-2B training required by Title 14 of the Code of Federal Regulations (14 CFR) part 91 subpart N, in accordance with part 91, § 91.1701 and the limitations and provisions of this Letter of Authorization (LOA). Use of an approved MU-2B training program must be conducted in accordance with 14 CFR parts 61 and 91.

2. Training Program Conditions and Limitations.

a. The Responsible Person for the training provider must ensure that a flight instructor providing instruction or conducting a flight review for that training provider in a Mitsubishi MU-2B series airplane meets the requirements of § 91.1713 and conducts training in accordance with the approved training program listed in Table 1 below.

b. The Responsible Person for the training provider must ensure and certify that each person receiving training under the approved training program listed in Table 1 below meets the eligibility and aeronautical experience requirements of the approved training program to begin

UNCONTROLLED COPY WHEN DOWNLOADED
Check with FSIMS to verify current version before using

any training, testing, or checking associated with the assigned training program. Such certification will be placed in the trainee's training records.

c. MU-2B training programs authorized by this LOA are not applicable to any 14 CFR part 121 or part 135 air carrier-specific training programs, or to 14 CFR part 91 subpart K or part 125 air operator-specific training programs.

d. The MU-2B training program authorized in Table 1 must continue to be in compliance with part 91 subpart N, § 91.1709.

e. The authority to conduct approved training under this LOA will expire on the date indicated in Table 1 unless sooner revoked, cancelled, rescinded, superseded, or the authorization is renewed prior to the expiration date listed. Training program approvals will not exceed 24 months.

Table 1 – Approved MU-2B Training Program

Course Title	Revision Number and/or Date	Expiration Date (MM/YYYY)
[text box]	[text box]	[text box or calendar]

3. Use of This LOA.

a. This authorization may be canceled by the issuing office in the event the training provider fails to comply with the requirements of part 91 subpart N.

b. The Administrator may require revision of an approved MU-2B training program at any time.

c. The training provider must submit any requested changes to the approved training program authorized in this LOA to the issuing Flight Standards District Office (FSDO).

d. The Responsible Person must present the approved training program and FAA approval documentation to any representative of the Administrator, upon request.

e. This LOA is nontransferable.

f. The Administrator may observe flight instructors conducting training or personnel administering checks at any time.

4. Responsible Person. The Responsible Person must be a person who is the training provider, or, if the training provider is a legal entity, then the person may be an officer, employee, or person with whom that entity has contracted in order to act on behalf of the legal entity with respect to the MU-2B training program authorization. This person must be a U.S. citizen or a person who holds an FAA pilot certificate, and by signing this document, accepts responsibility

UNCONTROLLED COPY WHEN DOWNLOADED
Check with FSIMS to verify current version before using

for ensuring the training provider complies with the approved training program, the training program authorization, and all other applicable regulations.

a. If the Responsible Person named on this LOA relinquishes responsibility, this LOA becomes void.

b. The Responsible Person listed in Table 2 below is also responsible for ensuring this LOA is kept current.

Table 2 – MU-2B Training Program Responsible Person

Name	Email Address	Telephone Number
[LOAD personnel data]	[text box]	[text box]

Figure 5-13-2B. Letter Disapproving a Mitsubishi MU-2B Series Aircraft Training Program

FAA Letterhead

[Date]

[Training Provider's Name and Address]

Dear [Responsible Person's Name]:

We are unable to approve your Mitsubishi MU-2B series aircraft training program for the following reasons:

_____

_____

_____

_____

_____

If you wish to continue to seek approval for the Mitsubishi MU-2B series aircraft training program, you may reapply when appropriate corrections have been made.

Should you have any questions concerning this matter, please contact this office at [FSDO telephone number].

Sincerely,

[POI's signature]

UNCONTROLLED COPY WHEN DOWNLOADED
Check with FSIMS to verify current version before using

Figure 5-13-2C. Letter Disapproving a Request to Renew a Mitsubishi MU-2B Series Aircraft Training Program

FAA Letterhead

[Date]

[Training Provider's Name and Address]

Dear [Responsible Person's Name]:

We are unable to approve your request to renew your Mitsubishi MU-2B series aircraft training program for the following reasons:

_____

_____

_____

_____

_____

If you wish to continue to seek renewal of the above training program, you may reapply when you have made the appropriate corrections.

Should you have any questions concerning this matter, please contact this office at [FSDO telephone number].

Sincerely,

[POI's signature]

UNCONTROLLED COPY WHEN DOWNLOADED
Check with FSIMS to verify current version before using

Figure 5-13-2D. Letter Disapproving a Request to Amend a Mitsubishi MU-2B Series Aircraft Training Program

FAA Letterhead

[Date]

[Training Provider's Name and Address]

Dear [Responsible Person's Name]:

We are unable to approve your request, dated [date of request], to amend your Mitsubishi MU-2B series aircraft training program for the following reasons:

_____

_____

_____

_____

_____

If you wish to continue to seek approval for the above amendment, you may reapply when you have made the appropriate corrections.

Should you have any questions concerning this matter, please contact this office at [FSDO telephone number].

Sincerely,

[POI's signature]

UNCONTROLLED COPY WHEN DOWNLOADED
Check with FSIMS to verify current version before using

Figure 5-13-2E. Letter Informing a Training Provider to Change Their Training Program

FAA Letterhead

[Date]

[Training Provider's Name and Address]

Dear [Responsible Person's Name]:

The training requirements of your Mitsubishi MU-2B series aircraft training program have changed. In order to meet these new requirements, the following changes must be made:

_____

_____

_____

_____

_____

If you do not make and resubmit the appropriate changes to us within 30 days, this office will cancel the letter of authorization approving your Mitsubishi MU-2B series aircraft training program.

Should you have any questions concerning this matter, please contact this office at [FSDO telephone number].

Sincerely,

[POI's signature]

UNCONTROLLED COPY WHEN DOWNLOADED
Check with FSIMS to verify current version before using

Figure 5-13-2F. Letter Canceling Approval of a Mitsubishi MU-2B Series Aircraft Training Program

FAA Letterhead

[Date]

[Training Provider's Name and Address]

Dear [Responsible Person's Name]:

We have determined that your Mitsubishi MU-2B series aircraft training program no longer meets the minimum training requirements for the following reasons:

_____

_____

_____

_____

_____

Consequently, this office has canceled the letter of authorization approving your Mitsubishi MU-2B series aircraft training program, dated [date of approval]. If you wish to seek reapproval for your Mitsubishi MU-2B series aircraft training program, you may reapply when you have made appropriate corrections.

Should you have any questions concerning this matter, please contact this office at [FSDO telephone number].

Sincerely,

[POI's signature]

5-13-2-17 through 5-13-2-31 RESERVED.

UNCONTROLLED COPY WHEN DOWNLOADED
Check with FSIMS to verify current version before using

VOLUME 5 AIRMAN CERTIFICATION

CHAPTER 14 FAA ENGLISH LANGUAGE STANDARD FOR CERTIFICATION UNDER 14 CFR PARTS 61, 63, 65, AND 107

Section 1 Determine If an Applicant/Certificated Airman Meets the English Language Eligibility Requirement for an FAA Certificate

5-1905 PROGRAM TRACKING AND REPORTING SUBSYSTEM (PTRS) ACTIVITY CODES.

A. **Operations:** 1590.

B. **Maintenance/Repairman:** 3504 for mechanic; 3508 for maintenance repairman.

C. **Avionics:** 5508.

D. **Parachute Rigger:** 3503.

E. **Aircraft Dispatcher:** 1524.

5-1906 BACKGROUND. The Federal Aviation Administration (FAA) has determined that the Aviation English Language Standard (AELS) is similar to other skills and proficiencies an FAA-certificated airman or applicant must possess. The airman must continue to possess the required skills and proficiencies stated in the Airman Certification Standards (ACS) and airman practical test standards (PTS). This is especially critical regarding the AELS, since the FAA identified that lack of AELS skills is a serious hazard to the National Airspace System (NAS) and flight operations. The FAA has coordinated with the International Civil Aviation Organization (ICAO) and its Member States affirming that the English language will be used for all standard aviation communications. The FAA has accepted the ICAO Language Proficiency Ratings Scale Operational Level 4 as the minimum English proficiency level required for all persons who currently hold a temporary or permanent FAA certificate and/or rating. This includes a person making an application for, or who already holds, an FAA Student Pilot Certificate. Further, the FAA accepted the ICAO standard and adopted the following guidance to provide a reasonable method for determining that an individual meets the FAA regulatory English language eligibility standards for all the respective unrestricted FAA certificates issued under Title 14 of the Code of Federal Regulations (14 CFR) parts 61, 63, 65, and 107. Finally, the increasing number of foreign students entering the United States seeking to obtain flight training and the increase in pilot deviations (PD) reported by the Air Traffic Organization (ATO) involving lack of English language skills have precipitated the agency to develop an AELS metric to be utilized to assess applicants for or holders of FAA certificates without placing restrictions due to failure to meet the AELS. The use of this metric will enable aviation safety inspectors (ASI) and Designated Examiners (DE) to determine if an applicant or FAA-certificated individual meets the FAA regulatory English language eligibility requirements for his or her respective FAA certificate.

5-1907 APPLICABILITY. This section provides an ASI with a process to assess an individual referred to the FAA, or otherwise showing cause for an English language assessment, because

UNCONTROLLED COPY WHEN DOWNLOADED
Check with FSIMS to verify current version before using

his or her ability to meet the FAA regulatory English language eligibility requirements to apply for or hold an FAA certificate is in question. The basis for the referral could be from, for example, an authorized individual or organization (see subparagraph B) during testing, checking, or training (such as a proficiency check, flight review, or solo flight endorsement), or by an ASI during surveillance or investigation activities.

A. Regulatory Requirement. Part 61, §§ 61.65, 61.75, 61.83, 61.96, 61.103, 61.123, 61.153, and 61.183 state an applicant must "[b]e able to read, speak, write, and understand the English language." In addition, each of the following FAA certificates has a respective FAA regulatory English language eligibility requirement:

- Flight Engineer (Part 63).
- Flight Navigator (Part 63).
- Air Traffic Control Tower Operator (Part 65).
- Aircraft Dispatcher (Part 65).
- Mechanic (Part 65).
- Repairman (Part 65).
- Parachute Rigger (Part 65).
- Unmanned Aircraft System (UAS) Remote Pilot with a small UAS rating (Part 107).

B. Authorized Individuals and Organizations. The FAA has determined that authorized individuals (such as flight instructors), organizations, and training centers have responsibility during testing, checking, accepting an application for a Student Pilot Certificate, issuing an endorsement for a flight review or solo privileges, or conducting a pilot proficiency check, to ensure that the individual meets the FAA regulatory English language eligibility requirements. Advisory Circular (AC) 60-28, FAA English Language Standard for an FAA Certificate Issued Under 14 CFR Parts 61, 63, 65, and 107, provides guidance for authorized individuals and organizations to assess if an applicant for a certificate or rating, or holder of an FAA certificate, does or does not meet the FAA regulatory English language eligibility requirements for his or her respective FAA certificate. If the individual's ability to meet the FAA regulatory English language eligibility requirements is in question, they are to refer that individual to the FAA Flight Standards District Office (FSDO) of jurisdiction to have his or her ability to meet the FAA regulatory English language eligibility requirements assessed.

5-1908 REFERENCES, FORMS, AND JOB AIDS.

A. References (current editions):

1) Title 14 CFR Parts 61, 63, 65, 107, and 183.

2) FAA Orders:

- FAA Order 2150.3, FAA Compliance and Enforcement Program.
- FAA Order JO 7110.65, Air Traffic Control. Prescribes air traffic control (ATC) procedures and phraseology.

UNCONTROLLED COPY WHEN DOWNLOADED
Check with FSIMS to verify current version before using

- FAA Order 8900.1:

  - Volume 3, Chapter 54, Section 2, Part 142 Training Centers: Training, Qualification, and Designation of Training Center Instructions and Evaluators.
  - Volume 5, Airman Certification.
  - Volume 13, Chapter 5, Section 2, Paragraph 13-436, Review of a Designee's Decision.
  - Volume 14, Chapter 1, Appendix 14-1, Compliance Philosophy and Pilot's Bill of Rights Brochure.
  - Volume 16, Unmanned Aircraft Systems.
- FAA Order 8900.2, General Aviation Airman Designee Handbook.

3) Other Documents. Resources include, but are not limited to:

- AC 107-2, Small Unmanned Aircraft Systems (sUAS).
- FAA Airman Certification Standards (ACS).
- FAA Airman Knowledge Test Guides, Handbooks, and Manuals available at http://www.faa.gov/training_testing/testing/test_guides/; and http://www.faa.gov/regulations_policies/handbooks_manuals/.
- FAA Information for Operators (InFO) 08012, International Civil Aviation Organization (ICAO) Language Proficiency Requirements.
- FAA-S-8081-10, Aircraft Dispatcher Practical Test Standards.
- FAA-G-8082-9, Flight Engineer Knowledge Test Guide.
- FAA-G-8082-20, Remote Pilot Knowledge Test Guide.
- FAA-H-8083-25, Pilot's Handbook of Aeronautical Knowledge.
- FAA-H-8083-27, Student Pilot Guide.
- FAA-H-8083-30, Aviation Maintenance Technician Handbook.
- ICAO Annex 1, Personnel Licensing.
- ICAO English Language Criteria Definitions found in ICAO Document 9835, Manual on the Implementation of ICAO Language Proficiency Requirements. Available at https://www4.icao.int/aelts/uploads/icao%20doc9835%202nd%20edition.pdf.
- Live ATC audio at http://www.liveatc.net/search/?icao=KJFK.

B. Forms. None.

C. Job Aids. None.

5-1909 ICAO ENGLISH LANGUAGE CRITERIA DEFINITIONS. The FAA has accepted the ICAO Language Proficiency Ratings Scale Operational Level 4 as its minimum proficiency requirement. The Proficiency Scale is found in ICAO Document 9835. These definitions apply to any applicant or airman applying for or holding an FAA certificate.

A. Pronunciation (P). This assumes that English is not the applicant's native language and that the applicant has a dialect or accent that is intelligible to the aeronautical community.

UNCONTROLLED COPY WHEN DOWNLOADED
Check with FSIMS to verify current version before using

Pronunciation, stress, rhythm, and intonation are influenced by the applicant's native language, but only sometimes interfere with ease of understanding.

B. Structure (S). Relevant grammatical structures and sentence patterns are determined by language functions appropriate to the task. Basic grammatical structures and sentence patterns are used creatively and are usually well controlled by the applicant. Errors may occur, particularly in unusual or unexpected circumstances, but rarely interfere with meaning.

C. Vocabulary (V). The applicant's vocabulary range and accuracy are usually sufficient to communicate effectively on common, concrete, and work-related topics. The applicant can often paraphrase successfully when lacking vocabulary in unusual or unexpected circumstances.

D. Fluency (F). The applicant produces stretches of language at an appropriate tempo. There may be occasional loss of fluency on transition from rehearsed or formulaic speech to spontaneous interaction, but this does not prevent effective communication. The applicant can make limited use of discourse markers or connectors. Fillers are not distracting.

E. Comprehension (C). Comprehension by the applicant is mostly accurate on common, concrete, and work-related topics when the dialect, accent, or variety used is sufficiently intelligible. When the applicant is confronted with a linguistic or situational complication or an unexpected turn of events, comprehension may be slower or require clarification strategies.

F. Interactions (I). Responses by the applicant are usually immediate, appropriate, and informative. The applicant initiates and maintains exchanges even when dealing with an unexpected turn of events. The applicant deals adequately with apparent misunderstandings by checking, confirming, or clarifying.

NOTE: Reports have determined that an individual referred for an AELS may possess the attributes listed above and be able to communicate using the English language, yet be handicapped during flight in a high-traffic environment (also due to the stress associated with being an inexperienced pilot) because English is their second language.

5-1910 THE FAA MINIMUM ENGLISH LANGUAGE ELIGIBILITY REQUIREMENT. ICAO Operational Level 4 is the minimum acceptable level of proficiency to meet the FAA regulatory English language eligibility requirements for an FAA certificate. ASIs are encouraged to use the following ICAO language proficiency website to familiarize their hearing and educate themselves with regard to ICAO English language proficiency (ELP) operational levels so they can better determine whether an individual meets FAA AELS at ICAO Operational Level 4: http://cfapp.icao.int/rssta/RSSTA.cfm.

NOTE: This site provides language audio samples of ICAO Operational Level 4, which is required to meet the AELS criteria defined in paragraph 5-1909. In the audio samples, proficiency criteria are listed as P (Pronunciation), S (Structure), V (Vocabulary), F (Fluency), C (Comprehension), and I (Interactions) for the various levels of proficiency, as shown in Figure 5-233, ICAO Rated Speech

UNCONTROLLED COPY WHEN DOWNLOADED
Check with FSIMS to verify current version before using

Samples Developed for ICAO by the International Civil Aviation English Association (ICAEA). The minimum operational level for an FAA certificate is Operational Level 4.

5-1911 ASSESSING THE ENGLISH LANGUAGE SKILLS OF AN APPLICANT FOR OR HOLDER OF AN FAA CERTIFICATE. The following is the overall English language assessment policy and actions to be taken if an individual's ability to meet the FAA regulatory English language eligibility requirements to apply for or hold an FAA certificate is in question.

NOTE: Reports have determined that an individual referred for an AELS assessment may be able to communicate in English during a conversation, but may become inhibited and unable to communicate in accordance with the ACS during flight in a high-traffic environment due to English being their second language and the stress associated with being an inexperienced pilot. Therefore, a totally unassisted flight in a busy environment with induced stress may be necessary to accomplish the AELS assessment. In such cases, the ASI is to observe the student or certificated pilot conduct a flight without any assistance, unless a safety issue occurs, to determine that the individual can perform in accordance with the ACS.

A. Individual Referred to the FAA for an AELS Assessment. Per AC 60-28, an FAA AELS evaluator will refer the individual to the FAA for assessment. Per the definition in the AC, an evaluator is any individual who is authorized to conduct certification, training, testing, or checking, or to issue an endorsement required by the regulations. Upon receiving notification from the evaluator of an individual whose ability to meet the FAA regulatory English language eligibility requirements to hold an FAA certificate is in question, the FSDO of jurisdiction will contact the individual and schedule an appointment to assess if the individual meets the FAA regulatory English language eligibility requirements to hold an FAA certificate. Initially, the ASI will conduct an AELS assessment to validate the reason the individual was referred to the FSDO. As part of the assessment, the FAA will provide the individual with the Pilot's Bill of Rights (PBR) brochure.

B. Referred Individual Does Not Contact FSDO for an AELS Assessment.

1) The application that started with the evaluator should have been submitted to the Airmen Certification Branch (AFB-720) indicating "Referred to FSDO for AELS Determination." If the individual does not contact the FSDO of jurisdiction or the FSDO is not able to contact the individual within a reasonable time (e.g., 2 weeks), the FSDO will notify AFB-720 to place a stop on any application for an FAA certificate or rating filed for the respective individual. After receiving that application, AFB-720 will have an indicator placed in the airman record that will prevent any future issuances or reissuances until an ASI has submitted a "Meets AELS" application to AFB-720. If the individual attempts to sidestep the AELS validation process and goes to another DE in another jurisdiction and is issued the certificate/rating, then AFB-720 will notify the office granting the certificate/rating of the previous lack of qualifications by returning the application on a Correction Notice and request that the second FSDO and certifying DE collaborate with the initial FSDO and DE to have the individual assessed for AELS by the second FSDO.

UNCONTROLLED COPY WHEN DOWNLOADED
Check with FSIMS to verify current version before using

2) If an evaluator refers an FAA-certificated individual to the FSDO of jurisdiction for an AELS assessment, regardless of whether the event was a certification event or any other event, and the individual does not contact the FSDO or the FSDO cannot contact the referred individual, the FSDO will follow the procedures in subparagraph C.

C. Certificated Airman Does Not Meet the FAA AELS. If the initial assessment reveals that the certificated airman does not meet the FAA AELS, FAA personnel will use the reexamination authority of Title 49 of the United States Code (49 U.S.C.) § 44709(a). See Volume 5, Chapter 7, Reexamination of an Airman, and refer to Order 2150.3, chapter 5, paragraph 11.

NOTE: Per Order 2150.3, chapter 5, the FAA does not allow an airman who has not demonstrated qualifications to try repeatedly to prove qualification. Generally, if the airman has twice submitted to reexamination and twice failed, the certificate or rating is revoked. The opportunity for a second reexamination is allowed when the airman voluntarily places his or her certificate "on deposit" with the FAA following the first failure, while the certificate holder prepares for the second attempt.

D. Applicant for a Flight Engineer, Flight Navigator, Air Traffic Control Tower Operator, Aircraft Dispatcher, Mechanic, Repairman, Parachute Rigger, or Remote Pilot Certificate Does Not Meet the FAA AELS. In the case of an applicant for a Flight Engineer, Flight Navigator, Air Traffic Control Tower Operator, Mechanic, Repairman, Parachute Rigger, or Remote Pilot Certificate who does not meet this requirement, the Administrator may place any limitation on the certificate that he or she considers necessary for safety. If it is determined that an individual applicant for one of these certificates does not meet the respective FAA regulatory English language eligibility requirements, see Volume 5, Chapters 4 and 5, and Volume 16, Chapter 3, as applicable, to determine if a limitation for English language is available. There are no limitations applicable to Aircraft Dispatcher Certificates. Therefore, Aircraft Dispatchers must always meet AELS requirements.

5-1912 CONDUCTING THE AELS ASSESSMENT.

A. The FAA AELS. The FAA AELS is the metric by which the applicant for an FAA certificate or rating, or a holder of an FAA certificate, demonstrates his or her ability to read, speak, write, and understand the English language. Meeting this standard will ensure that the individual meets the FAA regulatory English language eligibility requirements for his or her respective FAA certificate.

1) Parts 61 and 107 Certificates. The ACS English language standard for pilots states, "In accordance with the requirements of 14 CFR parts 61, 107 and the FAA Aviation English language standard, throughout the application and testing process, the applicant must demonstrate the ability to read, write, speak, and understand the English language. English language standard is required to communicate effectively with ATC, to comply with ATC instructions, and to ensure clear and effective crew communication and coordination. Normal restatement of questions does not constitute grounds for disqualification."

UNCONTROLLED COPY WHEN DOWNLOADED
Check with FSIMS to verify current version before using

2) Parts 63 and 65 Certificates. For those certificates issued under parts 63 and 65, the metric parallels the ACS. However, the ASI should focus on the individual's ability to communicate in English in a discernible and understandable manner with others.

B. Communication in English. Regardless of whether the individual's first language is or is not English, listen to determine that the individual can communicate in English with ATC, pilots, and others involved in preparing an aircraft for flight and operating an aircraft in flight. This communication may or may not involve the use of the radio.

NOTE: Specific to a pilot and additional ratings, refer to the appropriate ACS/PTS to ensure that the pilot/applicant is able to communicate effectively with ATC, to comply with ATC instructions, and to ensure clear and effective crew communication and coordination.

C. ASI Interaction. The interaction between the ASI and the individual will assist the ASI in determining whether or not the individual meets the FAA regulatory English language eligibility requirements.

D. Assessment and Testing Examples. Assess the individual's ability to meet the FAA regulatory English language eligibility requirements for the respective FAA certificate. See paragraph 5-1911 for details. Below are testing examples that can be used during the assessment, which must be tailored to meet the expectations of the certificate held.

1) As part of the process, engage the individual in conversation.

2) Ask the individual to read from aviation materials. Ask the individual to explain and write down what he or she read.

3) For pilots and instructors, have the individual listen to ATC instructions and explain what he or she hears.

4) Listen, observe, and ask yourself:

- Can the individual read English?
- Can the individual write English?
- Does the individual understand and follow your verbal conversation?
- From the individual's explanation of what he or she read, could you understand him or her without undue focus on his or her pronunciation and speech?
- Will his or her English skills enable him or her to communicate effectively with ATC, understand and comply with ATC instructions, communicate with others involved in the preparation of an aircraft for flight and/or in the conduct of flight, and provide effective communication and crew coordination as needed?
- Did the individual explain/respond to questions that demonstrated he or she understands the English presented in the material(s) he or she read, ATC instructions he or she heard, and the questions you asked?

UNCONTROLLED COPY WHEN DOWNLOADED
Check with FSIMS to verify current version before using

5-1913 EXCEPTION TO CONDUCTING 49 U.S.C. § 44709 REEXAMINATION DUE TO INDIVIDUAL NOT MEETING AELS. The following are exceptions to the requirements to conduct a § 44709 reexamination, or denial of issuing the individual an FAA certificate (see Figure 5-231, Referred to FSDO for AELS Determination Process).

A. The Individual Has a Medical Condition. An applicant who is unable to meet the FAA regulatory English language eligibility requirements due to medical reasons (e.g., he or she is hearing impaired) may be issued an FAA certificate. In this case, the Administrator may place such operating limitations or an exemption on the applicant's certificate. If a limitation or an exemption is available for the respective certificate relative to a medical reason for not meeting the FAA regulatory English language eligibility requirements, refer to the appropriate section of this order for the certificate applied for or held by the individual.

B. Flight Engineer, Flight Navigator, Air Traffic Control Tower Operator, Mechanic, Repairman, Parachute Rigger, or Remote Pilot Certificate Applicant Does Not Meet the FAA Regulatory English Language Eligibility Requirements Other Than for a Medical Reason. Per part 63, § 63.42; part 65, § 65.71(a)(2); or part 107, as applicable, refer to the appropriate guidance in this order to determine if a limitation can be issued for the individual not meeting the FAA regulatory English language eligibility requirements for the respective FAA certificate.

5-1914 IF THE ASI DETERMINES THE INDIVIDUAL DOES NOT MEET THE FAA AELS.

A. FAA-Certificated Individuals. If the ASI has reasonable question as to whether a certificated individual, including an individual holding a Student Pilot Certificate, does not meet the FAA regulatory English language eligibility requirements, he or she will:

1) Issue a letter of reexamination to the individual containing the written PBR.

2) Prepare the letter of reexamination stating the factual basis on which the reexamination is requested and the scope of the reexamination. For example, the reexamination is based upon reasonable question of the individual's qualifications to meet the FAA regulatory English language eligibility requirements to apply for or hold an FAA certificate, and the ASI requests the certificate holder place his or her certificate on temporary deposit with the appropriate Flight Standards office (FSDO/certificate management office (CMO)) pending reexamination. The inspector can inform that certificate holder that while the certificate is on deposit, the individual can improve his or her English language proficiency before taking the reexamination (e.g., by taking the aviation English language course). Refer to Volume 5, Chapter 7; Volume 14, Chapter 1, Section 3; and Order 2150.3, chapter 5, paragraph 11.

B. FAA Certificate and/or Rating Applicants. For an applicant for an FAA certificate and/or rating, the ASI will:

1) Initiate a new Integrated Airman Certification and/or Rating Application (IACRA) or appropriate paper FAA application form and certification file.

2) Disapprove the IACRA or paper application.

UNCONTROLLED COPY WHEN DOWNLOADED
Check with FSIMS to verify current version before using

3) If the appropriate application form has a "Meets Aviation English Language Standard" box, mark the box. If the form does not have a "Meets Aviation English Language Standard" box, indicate in the free text box, "Does Not Meet English Language Standard."

4) Provide comments to indicate the reason for the rejection.

5) Forward the application to AFB-720.

6) Confirm that the evaluator forwarded the rejected application/notice of disapproval to AFB-720 (per Order 8900.2). If the evaluator used the paper application form, ensure that the form was forwarded by the FSDO for processing to AFB-720. If the application is based on a foreign certificate or military experience, ensure the evaluator issued FAA Form 8060-5, Notice of Disapproval of Application.

7) Complete a PTRS record of the actions taken by the ASI and the evaluator.

C. Corrective Action Before Another AELS Assessment Can Be Conducted. Advise the applicant/airman that he or she may take an aviation English language course to receive a certificate of completion that meets the ICAO Operational Level 4 before reapplying for the certificate. See Figure 5-232, Examples of English Language Proficiency (ELP) ICAO-Recognized Course Completion Certificate, for sample completion certificates.

5-1915 ACTONS TO BE TAKEN FOR AN APPLICANT FOR AN FAA CERTIFICATE AND FOR AN FAA-CERTIFICATED INDIVIDUAL THAT MEETS THE FAA AELS.

A. Certification Application/Test or Student Pilot Application. The ASI will:

1) Initiate a new IACRA application, or initiate a paper application, and mark/enter on the application that the individual meets the FAA regulatory English language eligibility requirements to hold an FAA certificate.

2) Issue the appropriate temporary certificate, and forward the approved and appropriate completed FAA application to AFB-720 for processing.

3) Complete a PTRS record of the actions taken by the ASI and the evaluator.

B. FAA-Certificated Individual. If an FAA-certificated individual is referred by an evaluator that was conducting a required 14 CFR testing, checking, or review event that was terminated or not signed off by the evaluator because the evaluator questioned whether the individual meets the FAA regulatory English language eligibility requirements to hold an FAA certificate, the ASI will:

1) Complete a PTRS record indicating in the "Remarks" section that the FAA assessed the individual and that individual meets the FAA regulatory English language eligibility requirements for an FAA certificate, and enters the action taken to notify the evaluator of the results and authorizes the evaluator to complete the initial event as applicable.

UNCONTROLLED COPY WHEN DOWNLOADED
Check with FSIMS to verify current version before using

2) Inform the evaluator of the results, and if the event involves obtaining the evaluator's endorsement, the evaluator can complete the flight event and issue the appropriate endorsement or training as appropriate in order for the airman to continue exercise the privileges of their FAA certificate.

5-1916 FOREIGN PILOTS HOLDING OR NOT HOLDING AN FAA CERTIFICATE. If an ASI during any surveillance or ramp inspection becomes aware of a foreign pilot who appears not to speak in English in an understandable and discernable manner, they will comply with Volume 12, Chapter 2, Section 8.

Figure 5-231. Referred to FSDO for AELS Determination Process

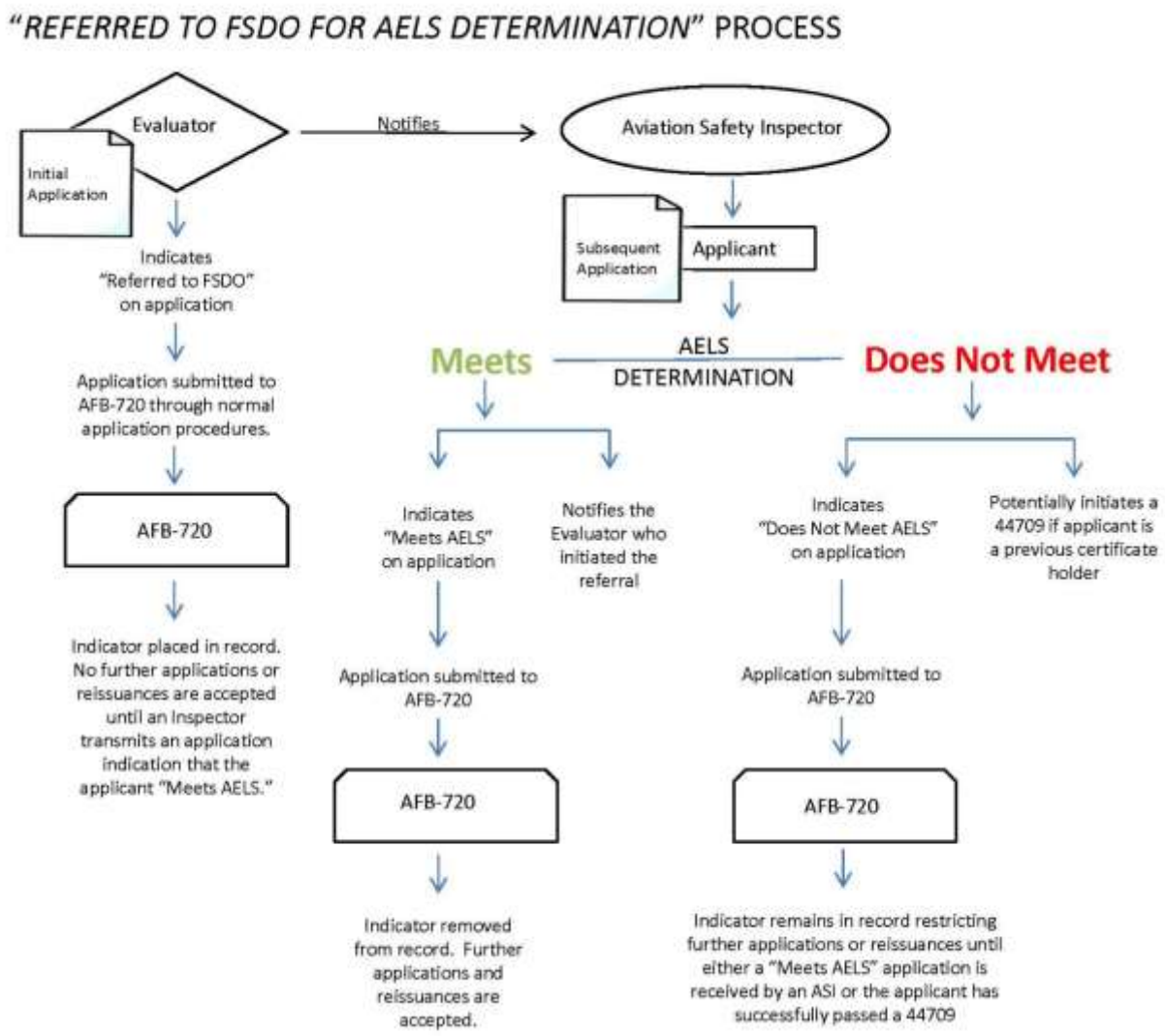

UNCONTROLLED COPY WHEN DOWNLOADED
Check with FSIMS to verify current version before using

Figure 5-232. Examples of English Language Proficiency (ELP) ICAO-Recognized Course Completion Certificate

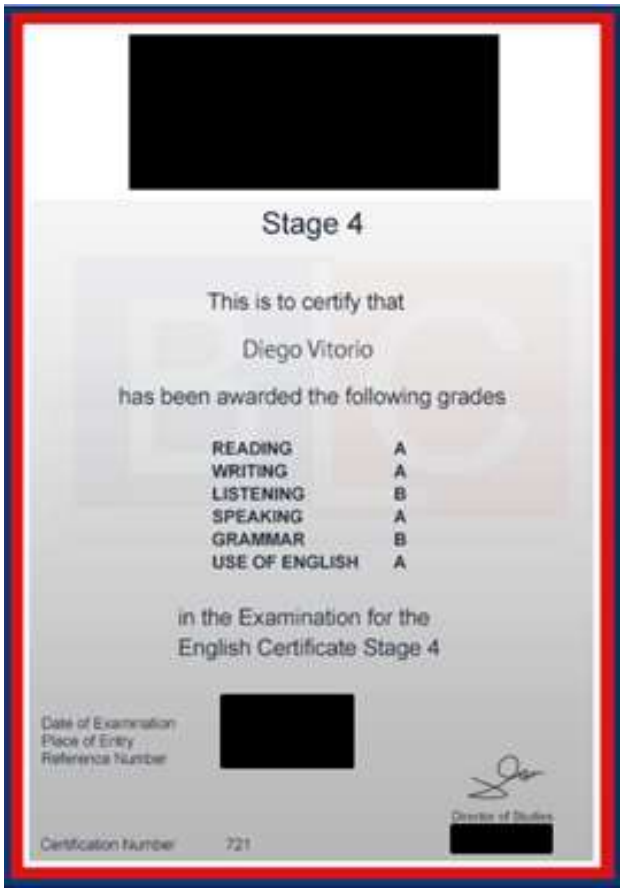
[redacted]

Stage 4

This is to certify that

Diego Vitorio

has been awarded the following grades

READING	A
WRITING	A
LISTENING	B
SPEAKING	A
GRAMMAR	B
USE OF ENGLISH	A

in the Examination for the
English Certificate Stage 4

Date of Examination
Place of Entry
Reference Number [redacted]

Director of Studies [redacted]

Certification Number 721

UNCONTROLLED COPY WHEN DOWNLOADED
Check with FSIMS to verify current version before using

Figure 5-232. Examples of English Language Proficiency (ELP) ICAO-Recognized Course Completion Certificate (Continued)

[redacted]

CERTIFICATE OF ACHIEVEMENT

This is to certify that:

FELIPE RIVAS UMBERT

achieved the EXPERT LEVEL (6) on the:

Test of English for Aviation

with the following results:

PRONUNCIATION	6
STRUCTURE	6
VOCABULARY	6
FLUENCY	6
COMPREHENSION	6
INTERACTIONS	6
OVERALL	6

according to the ICAO Language Proficiency Requirements established in Annex 1, Document 9835, its linguistic and holistic descriptors and the ICAO Rating Scale.

(ORIGINAL SIGNED) [redacted]

(ORIGINAL SIGNED) [redacted]

Date of Examination:
Place of Examination:
Certificate number: [redacted]

Figure 5-233. ICAO Rated Speech Samples Developed for ICAO by the International Civil Aviation English Association (ICAEA)

RESERVED. Paragraphs 5-1917 through 5-1930.

UNCONTROLLED COPY WHEN DOWNLOADED
Check with FSIMS to verify current version before using

VOLUME 6 SURVEILLANCE

CHAPTER 5 PART 133 INSPECTIONS

Section 1 Conduct a Part 133 Base Inspection

6-1371 PROGRAM TRACKING AND REPORTING SUBSYSTEM (PTRS) ACTIVITY CODES.

A. Operations: 1616.

B. Maintenance: 3627.

6-1372 OBJECTIVE. Determine whether an applicant meets Title 14 of the Code of Federal Regulations (14 CFR) part 133 regulatory requirements for initial certification, or whether an operator continues to be able to conduct operations in compliance with 14 CFR. Successful completion of this task results in either an indication of compliance or noncompliance in the applicant's or operator's file.

6-1373 GENERAL.

A. Authority. Part 133, § 133.39 allows the Administrator to make the inspections and/or tests found necessary to ensure compliance with the regulations.

B. Flight Under Instrument Flight Rules (IFR). If the operator cannot produce records showing they have a pilot who is instrument rated and current during a base inspection, then the operator should surrender authorization for flight under IFR or the assigned inspector should rescind it. The operator may retain the Operating Certificate for up to 2 years after discontinuing operations, but the operator may not retain IFR authorization without having a current IFR pilot and appropriately equipped rotorcraft. Use discretion. If the instrument pilot has temporarily lost currency, do not remove the IFR authorization.

C. Operator Recordkeeping. The Administrator requires the operator to maintain records for the purposes of inspections and determining compliance with the regulations.

1) For each class of authorization, the operator must maintain current pilot records signed by the Chief Pilot. These records should include the following:

a) The rotorcraft classes each pilot is authorized to fly;

b) A record of each pilot's duty appointment, such as Chief or Assistant Chief Pilot, and the effective date of the appointment to each duty position;

c) The dates each pilot was assigned to operate external loads and the dates each pilot was removed from an assignment;

UNCONTROLLED COPY WHEN DOWNLOADED
Check with FSIMS to verify current version before using

d) A copy of the appropriate logbook endorsements, letters of competency, or verification of a pilot's passing a knowledge and skill test for the class of external load that pilot is assigned to; and

e) A record of each pilot's operational checks.

2) For Class D load operations, the operator must maintain the following records in addition to those listed above and signed by the Chief Pilot.

a) A record for each pilot reflecting the date the pilot completed the initial or recurrent training; and

b) A record for each pilot of currency within the past 12 months that specifies class load, make and model (M/M) of rotorcraft, and date of operations.

3) For flight under IFR, the operator must maintain the following records for each pilot in addition to those listed above.

a) A list of assignments stating the class of load and M/M of rotorcraft each pilot is authorized to operate; and

b) An IFR currency record, a copy of the logbook endorsement for 14 CFR part 61, § 61.57 instrument competency check, or a record of instrument currency obtained within the past 6 months.

6-1374 GUIDELINES FOR DIFFICULTIES FREQUENTLY ENCOUNTERED IN PART 133 OPERATIONS.

A. Coordination. When an Airworthiness inspector cannot attend the base inspection, an Operations inspector should tailor the inspection to examine general airworthiness aspects. In this case, schedule a complete airworthiness inspection as soon as practical after the base inspection.

NOTE: Airworthiness aviation safety inspectors (ASI) will conduct a ramp inspection per Volume 6, Chapter 1, Section 4.

1) The inspector should be prepared to conduct a general examination of equipment, including the attaching means, personnel lifting devices, and quick-release devices in the normal and emergency configurations.

2) The inspector should observe actual operational checks performed by pilots, such as installing and removing attaching devices.

3) The inspector must coordinate with the airworthiness unit to ensure followup inspection of any items outside of the inspector's expertise.

UNCONTROLLED COPY WHEN DOWNLOADED
Check with FSIMS to verify current version before using

B. Levels of Deficiency and Appropriate Corrective Action. This paragraph offers examples of various deficiencies that might occur in an inspection and the appropriate action to take for each situation. Two assumptions apply. First, even after finding a discrepancy, the base inspection is completed. After inspection, summarize deficiencies and recommended corrective actions in a note to the file and/or in remarks to the PTRS record. Secondly, an unsatisfactory report may call for an enforcement action. Unsatisfactory reports usually result from violations of certification or operating rules found during the inspection. The requirements for holding an external-load Operating Certificate are never less than those for initial certification. There are intermediate stages between satisfactory and unsatisfactory results that may result in a satisfactory inspection with corrective action.

1) A spot correction is a discrepancy that is not a violation and is corrected during the inspection. It may require no further action. For example, the inspector does not find a facsimile of the external-load Operating Certificate on board the rotorcraft. The corrective action is the inspector notifying the operator that the certificate is not in the rotorcraft. During the inspection, the operator makes a copy of the certificate and places it in the rotorcraft. The inspector takes no other corrective action because no external-load operation occurred without the certificate. However, the inspector marks the PTRS data sheet with an "I" to indicate informational discrepancies during the inspection, and note that no facsimile of the certificate was found upon inspection and that a spot correction was made.

2) Take followup action on deficiencies or lack of pilot knowledge that do not involve violations. For example, at the time of inspection, a placard was missing from the rotorcraft and it was not readily available. However, there was no evidence that the rotorcraft operated without it. As a corrective action, advise the operator verbally of the deficiency, then write a letter to the operator outlining the discrepancy found during the inspection, make a copy of the letter for the Flight Standards District Office (FSDO) file, and schedule a followup inspection. Mark the PTRS data sheet with an "F" indicating followup.

3) A finding of "unsatisfactory" involves a blatant violation. For example, during an inspection, the inspector finds that a newly designated Chief Pilot has not completed the knowledge and skill test. The inspector must contact the previous Chief Pilot and obtain verbal and written statements, as well as a copy of the previous Chief Pilot's last pay stub, that proves the Chief Pilot ceased serving as Chief Pilot more than 30 days before the last external-load operation conducted by the operator. (See Volume 7, Chapter 6, Section 1 and Federal Aviation Administration (FAA) Order 2150.3, FAA Compliance and Enforcement Program.)

C. Presence of Chief Pilot and Other Pilots at Inspection. It is desirable to be able to spot-check the knowledge of the Chief Pilot and other pilots of the operation. Spot-check examination of pilots to verify continuing compliance. For example, ask questions on the Rotorcraft-Load Combination Flight Manual (RLCFM), including Weight and Balance (W&B) problems and, if applicable, questions on the authorizations for Class D and/or IFR operations. In addition, ask the pilots to demonstrate the use of attaching means, the operation of normal and emergency release mechanisms, and the operation of the winch, as applicable. If as a result of an inspection or test, the pilot or operator's competency is found questionable, take action under Title 49 of the United States Code (49 U.S.C.) § 44709 and/or enforcement action. (See Volume 7, Chapter 6, Section 1.)

UNCONTROLLED COPY WHEN DOWNLOADED
Check with FSIMS to verify current version before using

D. Discrepancy Between FSDO Files and Operations Base Files. If a discrepancy occurs between the records kept in the FSDO file and those found during the base inspection, determine which records are current and/or approved, and require correction of the unapproved or outdated ones. For example, the operator used a new rotorcraft without adding it to the list of authorized rotorcraft. The list is no longer current, and the inspector may initiate enforcement action to rectify the omission.

E. An Expired Lease Agreement. The exclusive use agreement must be current.

6-1375 INITIAL CERTIFICATION VERSUS LATER SURVEILLANCE. When this task is performed as the base inspection for original certification (during the demonstration and inspection phase of the certification process), there are some items that cannot be inspected. For example, an applicant for an external-load Operating Certificate would not have certificate facsimiles or lists of authorized rotorcraft for examination. For an original certification, mark the "NA" column on the base inspection job aid (Figure 6-63, Part 133 Base Inspection Job Aid) for items the inspector cannot evaluate.

6-1376 PREREQUISITES AND COORDINATION REQUIREMENTS.

A. Prerequisites. This task requires knowledge of the regulatory requirements of part 133, FAA policies, and qualification as an ASI (Operations) with knowledge of external-load operations. For Airworthiness inspectors, the task requires experience as a rotorcraft mechanic. If a FSDO does not have inspectors with this experience, the office manager will designate the best qualified ASIs.

B. Coordination. This task requires coordination with the airworthiness unit.

6-1377 REFERENCES, FORMS, AND JOB AIDS.

A. References (current editions):

- Title 14 CFR Parts 1, 27, 29, 61, 91, and 133.
- Advisory Circular (AC) 133-1, Rotorcraft External-Load Operations.
- PTRS Procedures Manual (PPM).
- FSDO file for this operator or applicant working file for initial certification.

B. Forms. FAA Form 8710-4, Rotorcraft External-Load Operator Certificate Application (for renewal or amendment).

C. Job Aids:

- Part 133 Base Inspection Job Aid (Figure 6-63).
- Sample letters and figures.

UNCONTROLLED COPY WHEN DOWNLOADED
Check with FSIMS to verify current version before using

6-1378 PROCEDURES.

A. Preinspection Activities.

1) Open the PTRS record.

2) Review the operator's records file at the FSDO for currency and applicability of the following:

a) Congested area plans (CAP),

b) Minimum equipment lists (MEL),

c) Training program (Class D only),

d) RLCFM,

e) Operating Certificate,

f) List of authorized rotorcraft,

g) Authorization(s) for Class D and IFR,

h) Chief Pilot's designation,

i) Training records and evidence of knowledge and skill tests,

j) Previous ramp inspections,

k) Complaints,

l) Operator's and pilots' violation histories,

m) Operator's and pilots' accident/incident histories, and

n) Associated records of surveillance.

3) Schedule the base inspection.

a) Schedule an appointment with the operator at the home base.

b) Advise the operator to have the Chief Pilot and at least one other pilot available during inspection, if possible.

c) Arrange to have at least the exclusive use rotorcraft available.

d) Remind the operator that the rotorcraft logbooks and engineering data must be available at the inspection, if practicable.

UNCONTROLLED COPY WHEN DOWNLOADED
Check with FSIMS to verify current version before using

B. Conduct the Base Inspection.

1) Inspect the following records to determine regulatory compliance:

a) Ensure that the Operating Certificate and current authorizations are available for inspection. A copy must be on board each rotorcraft during part 133 operations. The original Operating Certificate and all facsimiles must be identical to the copy in the FSDO files.

b) Inspect the list of authorized rotorcraft to ensure that it reflects the rotorcraft currently available for use and the authorized classes of load combination for each rotorcraft. A copy of this must be on board each rotorcraft during part 133 operations. This list and all copies of it must be identical to the most current version in the FSDO files.

c) Examine the RLCFM of each rotorcraft for currency.

d) Check to see that the operator has a current, approved Rotorcraft Flight Manual (RFM) for each rotorcraft.

e) For a CAP, see Volume 3, Chapter 51, Section 6.

f) Check for proof of ownership of the rotorcraft, or check the exclusive lease agreement or notes on the agreement for exclusivity of use. For leases, see Volume 3, Chapter 51, Section 5.

g) Check for the appropriateness of external-load classification.

h) Determine each pilot's qualifications for the operation by examining the records of each pilot's logbook endorsement or knowledge and skill letter of competence.

i) For Class D, check the training program to see if there are any unapproved changes. Ensure that the program matches the one filed in the FSDO.

j) For an IFR authorization, check that at least one pilot is current for IFR rotorcraft operations and that at least one rotorcraft is certificated and equipped for flight under IFR (Airworthiness inspector coordination is required).

k) Inspect the records of each pilot.

1. For pilots with Class D authorization, check their records to ensure that initial or recurrent training (as appropriate) has been received within the preceding 12 calendar-months (§ 133.37(b)).

2. Pilots with Class D authorization who have performed a rotorcraft external-load operation of the same class and in an aircraft of the same type within the past 12 calendar-months need not undergo recurrent training (§ 133.37(c)).

UNCONTROLLED COPY WHEN DOWNLOADED
Check with FSIMS to verify current version before using

2) Spot-check any available external-load pilots. Examine the pilots verbally for competence in the following critical areas:

a) Determine the pilots' understanding of the operating limitations outlined in § 133.45.

b) Determine the pilots' knowledge of the special authorizations (Class D and/or IFR). For Class D operations, ask the pilots to calculate one-engine-inoperative (OEI) hover performance at a typical weight and altitude in accordance with § 133.45(e)(1).

c) Ask the pilots to compute a W&B problem.

d) Ask the pilots to compute fuel required for a mission. They must comply with part 91, § 91.151 or § 91.167.

3) Inspect the rotorcraft (Airworthiness inspector coordination is required).

C. Observe an Onsite Operation. If possible, observe an actual external-load operation. Do not request that the operator conduct one unless one is scheduled.

D. Satisfactory Examination Results.

1) For an initial certification, indicate "satisfactory" on the base inspection job aid and the certification job aid. Proceed with the other demonstration and inspection phase inspections.

2) For a renewal, complete the application, prepare and issue a new certificate, and make a copy of the certificate for the FSDO file. If there are any changes from the initial certification or previous renewal, make a copy of the most recent certificate and indicate the changes from that copy to the current one. Indicate "satisfactory" on the base inspection job aid.

3) For followup items, advise the operator verbally of the deficiency and, if necessary, write a letter to the operator outlining the discrepancies found during the inspection. (see Figure 6-64, Sample Letter Outlining Inspection Discrepancies). Schedule a followup inspection as appropriate.

E. Unsatisfactory Examination Results.

1) Inform the operator that the inspection was unsatisfactory. Confirm the deficiencies encountered in writing (see Figure 6-65, Sample Letter Indicating Unsatisfactory Inspection).

2) According to the severity of the problem, take one of the following actions:

- Schedule a followup inspection in 30 days; or
- Initiate an enforcement investigation. See Volume 7, Chapter 6, Section 1.

F. Close the PTRS Record.

UNCONTROLLED COPY WHEN DOWNLOADED
Check with FSIMS to verify current version before using

6-1379 TASK OUTCOMES. Completion of this task results in one or more of the following:

- A record indicating a satisfactory inspection.
- A record indicating an unsatisfactory inspection.
- A record on file indicating deficiencies found during inspection and corrected on the spot.
- A letter to the operator indicating any discrepancies found during inspection.

6-1380 FUTURE ACTIVITIES.

- Followup inspection with a change in frequency of the surveillance plan for unannounced inspection, and
- Reexamination of pilot by conducting knowledge and skill test, as necessary.

UNCONTROLLED COPY WHEN DOWNLOADED
Check with FSIMS to verify current version before using

Figure 6-63. Part 133 Base Inspection Job Aid

Part 133 Base Inspection Job Aid	**Operator:**				
	Inspector Initials	**Date**	**Yes**	**No**	**NA**
1. Flight Standards District Office (FSDO) office file review.					
2. Application properly completed for renewal/amendment.					
3. Rotorcraft inspection.					
a. Equipped with a fixed external cargo-carrying device for Class A loads.					
b. Equipped with a hook for Class B, C, or D loads.					
c. Equipped with a winch or other device.					
d. Title 14 CFR part 133, § 133.49(a) placard in the cabin stating the class or classes for which approval has been given, and weight/center of gravity (CG) limitations.					
e. Section 133.49(b) marking adjacent to the load-carrying device stating maximum load as per the Rotorcraft-Load Combination Flight Manual (RLCFM).					
f. Inspection of all rotorcraft:					
(1) Installation and function of the load-carrying or load-attaching devices.					
(2) Optional equipment installations inspected.					
4. Operator has a copy of Advisory Circular (AC) 133-1, Rotorcraft External-Load Operations.					
5. Operator has pertinent 14 CFR parts for reference.					
6. RLCFMs approved and current.					
a. Ground crew briefings.					
b. All items required by § 133.47, Rotorcraft-Load Combination Flight Manual.					

UNCONTROLLED COPY WHEN DOWNLOADED
Check with FSIMS to verify current version before using

Figure 6-63. Part 133 Base Inspection Job Aid (Continued)

Part 133 Base Inspection Job Aid	**Operator:**				
	Inspector Initials	**Date**	**Yes**	**No**	**NA**
7. Class D authorization.					
a. Authorization current and available for inspection.					
b. Personnel lifting device is FAA-approved.					
c. Training records for each pilot conducting Class D operations.					
d. Operator has use of suitable communications equipment.					
e. All pilots have conducted part 133 operations within the previous 12 months or must have recurrent training prior to conducting operations.					
8. Operator has appropriate Chief Pilot.					
a. All pilots passed knowledge test (§ 133.23(b)).					
b. All pilots passed skill test (§ 133.23(c)).					
9. Congested area operations conducted.					
10. Congested area plan (CAP) approved.					
11. Flightcrew knowledge:					
a. Understands operating limits in § 133.45.					
b. Understands passenger-carrying limitations.					
c. Able to compute weight and balance (W&B).					
d. Understands operating airspeed limit.					
e. Understands limitations concerning restricted category rotorcraft.					
f. Understands typical hand signals.					
g. Understands content of operator authorizations.					
h. Understands fuel planning, 14 CFR part 91, § 91.151.					

UNCONTROLLED COPY WHEN DOWNLOADED
Check with FSIMS to verify current version before using

Figure 6-63. Part 133 Base Inspection Job Aid (Continued)

Part 133 Base Inspection Job Aid	**Operator:**				
	Inspector Initials	**Date**	**Yes**	**No**	**NA**
12. Operator has instrument flight rules (IFR) authorization.					
a. At least one pilot IFR rated and current in rotorcraft.					
b. At least one rotorcraft certified and equipped for IFR flight.					
c. Authorization current and available for inspection.					
d. Understands fuel planning, § 91.167.					
13. Rotorcraft external-load Operator Certificate available for inspection and current.					
14. List of authorized rotorcraft available for inspection and current.					
REMARKS:					

UNCONTROLLED COPY WHEN DOWNLOADED
Check with FSIMS to verify current version before using

Figure 6-64. Sample Letter Outlining Inspection Discrepancies

FAA Letterhead

[Date]

[Operator's name and address]

Dear [operator's name]:

During an inspection of your facilities and equipment conducted on [date], we noted the following discrepancies:

[List specific discrepancies.]

[List discrepancies corrected during the inspection.]

You should correct the above items within 30 days of receipt of this letter. We scheduled a followup inspection for [time and date]. If you are unable to correct these discrepancies before the next inspection or have any questions, please contact this office.

Sincerely,

[Signature of principal operations inspector (POI) or certification project manager (CPM)]

UNCONTROLLED COPY WHEN DOWNLOADED
Check with FSIMS to verify current version before using

Figure 6-65. Sample Letter Indicating Unsatisfactory Inspection

FAA Letterhead

[Date]

[Operator's name and address]

Dear [operator's name]:

The inspection of your facilities and equipment conducted on [date] was unsatisfactory.

We determined the following items were not in compliance with 14 CFR.

[List each specific item and the related 14 CFR, for example:]

[Pilot training records for [pilot's name] did not indicate satisfactory completion of the appropriate knowledge and skill tests (14 CFR part 133, § 133.37).]

This matter is now under investigation by the FAA. We wish to offer you an opportunity to discuss the incident personally and submit a written statement. If you desire to do either, accomplish this within 10 days following receipt of this letter. Your statement should contain all pertinent facts and any extenuating or mitigating circumstances that you believe may have a bearing on the incident. If we do not hear from you within the specified time, we will process our report without the benefit of your statement.

Sincerely,

[Signature of principal operations inspector (POI) or certification project manager (CPM)]

> NOTE TO INSPECTORS: You may also use this letter as the Letter of Investigation (LOI) to initiate enforcement action against a certificated operator.

RESERVED. Paragraphs 6-1381 through 6-1395.

UNCONTROLLED COPY WHEN DOWNLOADED
Check with FSIMS to verify current version before using

VOLUME 6 SURVEILLANCE

CHAPTER 5 PART 133 INSPECTIONS

Section 2 Conduct a Part 133 Ramp Inspection

6-1396 PROGRAM TRACKING AND REPORTING SUBSYSTEM (PTRS) ACTIVITY CODES.

A. Operations: 1622.

B. Maintenance: 3627.

C. Avionics: 5627.

6-1397 OBJECTIVE. To determine whether an operator continues to comply with Federal Aviation Administration (FAA) regulations, to deter violations, and to identify and correct operational deficiencies in the interest of safety. Successful completion of this task results in either a satisfactory inspection or an unsatisfactory inspection.

6-1398 GENERAL.

A. Definitions. For external-load operations, a ramp inspection is generally an onsite surveillance of an actual external-load operation, rather than a spot check on a ramp. However, the surveillance could occur on a ramp, much in the same manner as a Title 14 of the Code of Federal Regulations (14 CFR) part 91 ramp check (see Volume 6, Chapter 1, Section 4).

B. Initiation of Activity. The National Work Program Guidelines (NPG), the Flight Standards District Office (FSDO) surveillance schedule, complaints against the operator, or the inspector may initiate a ramp inspection.

C. Coordination With Other FSDOs. If an inspector conducts a ramp inspection of an external-load operator certificated in another FSDO's jurisdiction, the inspector must provide the inspection results to the certificate-holding district office (CHDO).

D. Pre-Surveillance Activities. Review previous inspection results in the PTRS and the FSDO file, if possible. Remarks and outcomes from previous inspections may reveal trends that could lead the inspector to emphasize certain areas during the ramp inspection.

E. The Surveillance. Timing may be a critical element in surveillance. The ramp inspection is frequently an unscheduled spot check. The surveillance may also take place by appointment. Often, a convenient time for conducting a ramp check is in conjunction with monitoring a congested area operation (see Volume 6, Chapter 5, Section 3).

UNCONTROLLED COPY WHEN DOWNLOADED
Check with FSIMS to verify current version before using

F. Surveillance Results.

1) The inspector must immediately advise the pilot of any unsatisfactory items observed and inform the pilot that further operation without corrective action may constitute violation of 14 CFR.

2) The inspector may recommend an increase in the number of ramp checks for an operator with unsatisfactory items, since onsite checks are necessary to verify compliance.

6-1399 PREREQUISITES AND COORDINATION REQUIREMENTS.

A. Prerequisites. This task requires knowledge of the regulatory requirements of 14 CFR part 133, FAA policies, and qualification as an aviation safety inspector (ASI) (Operations) with knowledge of external-load operations. For Airworthiness inspectors, the task requires experience as a rotorcraft mechanic. If a FSDO does not have inspectors with this experience, the office manager will designate the best qualified ASIs.

B. Coordination. This task requires coordination with the airworthiness unit.

6-1400 REFERENCES, FORMS, AND JOB AIDS.

A. References (current editions):

- Title 14 CFR Parts 1, 27, 29, 61, 91, and 133.
- Advisory Circular (AC) 133-1, Rotorcraft External-Load Operations.
- The PTRS Procedures Manual (PPM).

B. Forms. None.

C. Job Aids:

- Figure 6-66, Part 133 Ramp Inspection Job Aid; and
- Sample letters and figures.

6-1401 PROCEDURES.

A. Preinspection Activities (for an Operator Certificated by the Inspector's FSDO).

1) Open the PTRS file.

2) Review the FSDO file, including old PTRS remarks.

B. Document Review (at the Inspection Site).

1) Inspect the pilots' certificates and endorsements.

a) Medical certificates must be second-class or higher, issued within the 12 preceding months.

UNCONTROLLED COPY WHEN DOWNLOADED
Check with FSIMS to verify current version before using

b) The pilot must hold a commercial or higher grade pilot certificate with rotorcraft rating and appropriate type ratings.

c) Logbook endorsements or letters of competency must reflect class authorization for the conducted operation.

2) Inspect the rotorcraft airworthiness documents. The following documents must be on board:

a) A copy of the rotorcraft external-load Operating Certificate;

b) A copy of the list of authorized aircraft;

c) An approved Rotorcraft Flight Manual (RFM);

d) An approved Rotorcraft-Load Combination Flight Manual (RLCFM) (on some rotorcraft, the RFM may incorporate this); and

e) A registration certificate.

3) Inspect other pertinent documents.

a) If the ramp inspection involves a congested area operation, examine a copy of the approved congested area plan (CAP). Determine whether to combine the ramp inspection with the monitoring of the congested area operation. See Volume 6, Chapter 5, Section 3.

b) If appropriate, check for the Class D or instrument flight rules (IFR) authorizations.

4) For rotorcraft operated by a Canadian or Mexican operator performing operations in accordance with the North American Free Trade Agreement (NAFTA), the rotorcraft must carry on board the authorization from the national Civil Aviation Authority (CAA) and the FAA. Refer to information contained in Volume 12, Chapter 1, Section 4 when conducting any inspection of operators under NAFTA.

C. Examine Rotorcraft and Equipment.

NOTE: Airworthiness ASIs must conduct a ramp inspection in accordance with Volume 6, Chapter 1, Section 4.

1) Verify the correct Weight and Balance (W&B).

2) Check the pilot's fuel planning. Part 133 operators are not exempt from part 91, § 91.151 or § 91.167.

3) Check placards, cabin, cockpit, exterior, attaching means, release mechanisms, and winch operation and note any abnormalities (airworthiness).

4) Check for approval of any modifications or installations (airworthiness).

UNCONTROLLED COPY WHEN DOWNLOADED
Check with FSIMS to verify current version before using

5) Check the cockpit. Ask the pilot to power the cockpit and demonstrate the operation of the normal and emergency functions of the rotorcraft attachment system.

6) Check the communications equipment between all participating parties.

7) Check the attaching means for:

a) Class A security: the presence of appropriate restraining devices.

b) Class B or C security: the operation of normal and emergency releases.

c) Class D security: the operation of normal and emergency releases and the attachment approval. Refer to attaching device approval data in compliance with part 27, § 27.865 or part 29, § 29.865, depending on aircraft category.

8) Check the operation of the winch. Run cable in and out while on the ground. Listen for the quality of the winch mechanism, check cable markings (worn off), frayed cable, and swivels.

9) Check the harnesses for security and wear.

10) Conduct a general "walk around" rotorcraft inspection.

D. Surveillance of the Ground Crew. Verify that the ground crew briefing included:

1) Hand signals,

2) Radio phraseology and procedures,

3) Stoppage of operation if sudden hazard appears,

4) Emergency procedures, and

5) The approved CAP, if applicable.

E. Survey an Actual Operation. See Volume 6, Chapter 5, Section 3 for CAPs. For general operations, check the pilot's proficiency for the following:

1) Smoothness of control,

2) Minimum load oscillation,

3) Proper pickup of load,

4) Correct placement of load,

UNCONTROLLED COPY WHEN DOWNLOADED
Check with FSIMS to verify current version before using

5) Altitude control, and

6) Clear communication with ground crew, followed by appropriate action by either radio or hand signal.

F. Satisfactory Inspection. Indicate "satisfactory" on the job aid if the inspection is satisfactory.

1) Debrief the pilot on the site, if possible.

2) Debrief the operator by telephone or in writing (see Figure 6-67, Sample Letter Advising Operator of a Satisfactory Ramp Inspection).

3) Place a copy of the job aid in the FSDO office file. If a different FSDO certificated the operator, provide a copy of the job aid and all correspondence to that CHDO.

G. Unsatisfactory Inspection. Take the following actions if the inspection is unsatisfactory.

1) At the site:

a) Advise the pilot of areas of unsatisfactory performance or discrepancies, and

b) Document the discrepancies in the "Remarks" section of the job aid and in the PTRS.

2) At the FSDO:

a) Inform the operator verbally of discrepancies, and write a letter to the operator confirming the discrepancies (see Figure 6-68, Sample Letter Describing Discrepancies Found During Ramp Inspection);

b) See Volume 7, Chapter 6, Section 1 if an enforcement action is appropriate;

c) Send a copy of the inspection results to the operator's CHDO if applicable; and

d) Schedule followup surveillance and/or increase the frequency of surveillance.

H. Close the PTRS Record.

6-1402 TASK OUTCOMES.

- An indication in the operator's file of a satisfactory inspection, with or without discrepancies; or
- An indication in the operator's file of an unsatisfactory inspection.

UNCONTROLLED COPY WHEN DOWNLOADED
Check with FSIMS to verify current version before using

6-1403 FUTURE ACTIVITIES.

- A pilot or operator may be subject to a compliance investigation if the inspection reveals a possible violation of 14 CFR.
- A followup inspection may be conducted to determine if any noted discrepancies have been corrected.

Figure 6-66. Part 133 Ramp Inspection Job Aid

NAME OF OPERATOR		**DATE**		
INSPECTION ITEMS	**INSPECTOR INITIALS**	**S**	**U**	**NA**
PERSONNEL AND DOCUMENT INSPECTION				
I. PILOTS (Chief Pilot____ Other Pilots___)				
1. Medical certificates (2nd Class or higher)				
2. Pilot certificates				
3. Load class authorization				
a. Logbook endorsements				
b. Letter of Competency				
II. GROUND CREW				
1. Use of hand signals				
2. Use of radio				
a. Procedures				
b. Phraseology				
3. Emergency Procedures				
4. Knowledge of congested area plan (CAP)				
III. ROTORCRAFT				
1. External-load Operating Certificate copy				
a. Current and accurate				
b. Onboard rotorcraft				
2. List of authorized rotorcraft				
a. Onboard rotorcraft				
b. N-number of inspection rotorcraft match				
3. Approved Rotorcraft Flight Manual (RFM) on board				

UNCONTROLLED COPY WHEN DOWNLOADED
Check with FSIMS to verify current version before using

Figure 6-66. Part 133 Ramp Inspection Job Aid (Continued)

NAME OF OPERATOR		**DATE**		
INSPECTION ITEMS	**INSPECTOR INITIALS**	**S**	**U**	**NA**
PERSONNEL AND DOCUMENT INSPECTION				
4. Rotorcraft-Load Combination Flight Manual (RLCFM) on board				
5. Rotorcraft registration on board				
IV. OTHER DOCUMENTS				
1. CAP				
2. Authorizations___ Class D___ instrument flight rules (IFR)				
EQUIPMENT INSPECTION				
I. ROTORCRAFT				
1. Weight and Balance (W&B)				
2. Placards				
3. Cabin				
4. Cockpit				
II. ATTACHING MEANS				
1. Class A				
a. Security				
b. Appropriate restraining devices				
2. Class B and C				
a. Security				
b. Normal release operation				
c. Emergency release operation				
3. Class D				
a. Security				
b. Normal release operation				
c. Emergency release operation				
d. Approved personnel lifting device				

UNCONTROLLED COPY WHEN DOWNLOADED
Check with FSIMS to verify current version before using

Figure 6-66. Part 133 Ramp Inspection Job Aid (Continued)

NAME OF OPERATOR		**DATE**		
INSPECTION ITEMS	**INSPECTOR INITIALS**	**S**	**U**	**NA**
EQUIPMENT INSPECTION				
III. OTHER ASSOCIATED EQUIPMENT				
1. Winch operation				
2. Cables and harness				
3. General walk around				
OBSERVATION OF EXTERNAL-LOAD OPERATION				
I. PERSONNEL PROFICIENCY				
1. Pilots				
a. Smoothness of control				
b. Minimum of load oscillation				
c. Pickup of load				
d. Placement of load				
e. Altitude control				
2. Ground crew				
a. Handling of load				
b. Response to situations				
c. Communications with pilots				
II. CONGESTED AREA OPERATION				
INSPECTION RESULTS				
I. PERSONNEL				
II. EQUIPMENT				
III. OVERALL RESULTS				
1. Onsite debriefing				
2. Operator debriefing				
3. Information provided to the certificate-holding district office (CHDO)				

UNCONTROLLED COPY WHEN DOWNLOADED
Check with FSIMS to verify current version before using

Figure 6-66. Part 133 Ramp Inspection Job Aid (Continued)

NAME OF OPERATOR		**DATE**		
INSPECTION ITEMS	**INSPECTOR INITIALS**	**S**	**U**	**NA**
INSPECTION RESULTS				
REMARKS				

Figure 6-67. Sample Letter Advising Operator of a Satisfactory Ramp Inspection

FAA Letterhead

[Date]

[Operator's name and address]

Dear [operator's name]:

The results of the inspection of [type of rotorcraft, N-number] on [date] at [location] were satisfactory.

[List noticeably acceptable items, such as flightcrew cooperation and crew coordination.]

[Encourage future compliance.]

[Offer assistance, as necessary, to ensure future cooperation.]

Sincerely,

[Inspector's signature]

UNCONTROLLED COPY WHEN DOWNLOADED
Check with FSIMS to verify current version before using

Figure 6-68. Sample Letter Describing Discrepancies Found During Ramp Inspection

FAA Letterhead

[Date]

[Operator's name and address]

Dear [operator's name]:

> The inspection of your facilities and equipment conducted on [date] was unsatisfactory. We determined the following items were not in compliance with Title 14 of the Code of Federal Regulations (14 CFR).
>
> [List each specific item and the related 14 CFR part, for example:]
>
> [A copy of the external-load Operating Certificate was not on board the rotorcraft (§ 133.27(b)).]

This matter is under investigation by the FAA. We wish to offer you an opportunity to discuss the incident personally and submit a written statement. If you desire to do either, accomplish this within 10 days following receipt of this letter. Your statement should contain all pertinent facts and any extenuating or mitigating circumstances that you believe may have a bearing on the incident. If we do not hear from you within the specified time, we will process our report without the benefit of your statement.

Sincerely,

[Principal operations inspector's (POI) signature]

> NOTE TO INSPECTORS: You may use this as the letter of investigation (LOI) to initiate enforcement action for a certificated operator.

RESERVED. Paragraphs 6-1404 through 6-1420.

UNCONTROLLED COPY WHEN DOWNLOADED
Check with FSIMS to verify current version before using

VOLUME 6 SURVEILLANCE

CHAPTER 9 PART 145 INSPECTIONS

Section 8 Safety Assurance System: Inspect a Part 145 Repair Station's Housing and Facilities

6-1773 REPORTING SYSTEM(S). For Title 14 of the Code of Federal Regulations (14 CFR) part 145, use Safety Assurance System (SAS) automation and the associated Data Collection Tools (DCT).

6-1774 OBJECTIVE. This section provides guidance for repair stations during inspection, surveillance, change in location, or adding facilities, per part 145, § 145.103.

6-1775 GENERAL.

I. Certificated Repair Station (CRS) Accommodations. The CRS must provide facilities to accommodate equipment, materials, and personnel needed to properly perform maintenance, preventive maintenance, alterations of articles, or the specialized services for the rating it receives. When inspecting the repair station, the aviation safety inspector (ASI) should determine which items apply, based on the complexity of the facility and the level of ratings.

NOTE: A repair station applying for a change to its certificate (name, location, or ratings) must submit a request on Federal Aviation Administration (FAA) Form 8310-3, Application for Repair Station Certificate and/or Rating. The change to the certificate may affect the housing requirements or require additional procedures in the Repair Station Manual (RSM)/Quality Control Manual (QCM).

J. Line Maintenance Authorization Locations. A repair station may hold line maintenance authorization for locations outside of the repair station's fixed location as long as the repair station already provides housing as required by § 145.103(a).

6-1776 REFERENCES, FORMS, AND JOB AIDS.

K. References (current editions):

- Title 14 CFR Parts 43, 65, 91, 121, 125, 135, and 145.
- Volume 6, Chapter 9, Section 9, Safety Assurance System: Inspect a Part 145 Repair Station's Tools and Equipment.
- Volume 6, Chapter 11, Section 17, Safety Assurance System: Inspect Avionics Test Equipment.
- Volume 6, Chapter 11, Section 20, Safety Assurance System: Evaluate Special Equipment or Test Apparatus.
- Volume 6, Chapter 11, Section 27, Inspect a Nondestructive Inspection Program/Facility.
- Volume 6, Chapter 11, Section 28, Inspect a Repair Facility Accomplishing Composite Maintenance and Repairs.
- Volume 10, Safety Assurance System Policy and Procedures.

UNCONTROLLED COPY WHEN DOWNLOADED
Check with FSIMS to verify current version before using

- Volume 14, Chapter 1, Section 2, Flight Standards Service Compliance Action Decision Procedure.
- Advisory Circular (AC) 43-15, Recommended Guidelines for Instrument Shops.
- AC 43-214, Repairs and Alterations to Composite and Bonded Aircraft Structure.
- AC 145-9, Guide for Developing and Evaluating Repair Station and Quality Control Manuals.

L. Forms. None.

M. Job Aids. Flight Standards Information Management System (FSIMS) Job Aids:

1) Nondestructive Inspection for ASIs.

2) Evaluation of a Repair Facility Conducting Composite Repairs.

6-1777 PROCEDURES. Review applicable information, including the repair station certificate manuals/revision, capabilities listing, and operations specifications (OpSpecs) for accuracy to determine that ratings are appropriate for the work being performed. Also determine if maintenance functions will be contracted out, and that contracted persons will meet the requirements of § 145.217. Before the inspection, the principal inspector (PI) should carefully review the following:

- Part 145.
- RSM/QCM.
- OpSpecs, to include OpSpec A101, OpSpec D100, and OpSpec D107, if applicable.
- Applicable reports generated in SAS or the Safety Performance Analysis System (SPAS).
- SAS Configuration Module 1 Vitals Information.
- The certificate-holding district office (CHDO) file.

6-1778 CRS HOUSING.

N. Housing General. The ASIs should inspect the repair station facilities for properly performing the maintenance, preventative maintenance, alterations of articles, or the specialized services for which the repair station is rated. The facilities must include the following:

1) Sufficient workspace and areas for the proper segregation and protection of articles during all maintenance, preventive maintenance, or alterations.

2) Segregated work areas enabling environmentally hazardous or sensitive operations, such as painting, cleaning, nondestructive testing, composite repairs, surface treatments, welding, avionics work, electronic work, and machining, to be done properly and in a manner that does not adversely affect other maintenance or alterations.

3) Suitable racks, hoists, trays, stands, and other segregation means for the storage and protection of all articles undergoing maintenance, preventive maintenance, or alterations.

UNCONTROLLED COPY WHEN DOWNLOADED
Check with FSIMS to verify current version before using

4) Space sufficient to segregate articles and materials stocked for installation from those articles undergoing maintenance, preventive maintenance, or alterations.

5) Ventilation, lighting, and control of temperature, humidity, and other climatic conditions sufficient to ensure personnel perform maintenance, preventive maintenance, or alterations to the standards this part requires.

NOTE: In most circumstances, the article's maintenance manuals, component maintenance manual (CMM), or Standard Practices Manuals (SPM) provide the recommended environmental conditions.

O. Housing Requirements. ASIs should inspect and review the housing needs of the repair station.

1) A CRS must provide housing for the facilities, equipment, materials, and personnel consistent with its ratings and limitations. Section 145.103(b) provides a general exception to perform work outside of its housing if it provides suitable facilities that are acceptable to the FAA and meet the requirements of § 145.103(a), so that the work can be done in accordance with the requirements of part 43.

2) Each CRS must have a fixed location where materials, equipment, tools, and data are controlled and stored. While consideration can be given for certain operating situations, ASIs must not authorize "virtual" repair stations. Even if the majority of the work is done away from the fixed location, each repair station must have a permanent, fixed base from which it operates the repair station.

3) Repair stations that frequently work away from their fixed location must ensure the housing and facilities are adequate and meet the requirements of the regulations for the ratings that they hold. Their manuals should include procedures that describe how they will evaluate a facility prior to performing maintenance under the privileges of their certificate at that location.

4) To be issued line maintenance authorization, the repair station must show the capability to perform the limited scope of work defined in § 145.3(d) at each location. After demonstrating the capability, the repair station must perform the maintenance in accordance with § 145.205. It is permissible to issue line maintenance authorization to a repair station that does not have a hangar to house the aircraft listed on the airframe rating. The work performed must meet the requirements of § 145.103(a) so that the work can be done in accordance with the requirements of part 43 and § 145.205.

P. Air Carrier Maintenance. The ASI should review the RSM/QCM to verify procedures for a CRS performing maintenance, preventive maintenance, or alterations for the following certificated operators or carriers:

1) A part 121 or 135 air carrier or commercial operator that has a Continuous Airworthiness Maintenance Program (CAMP). The repair station must follow their program and determine if the housing is sufficient for the work performed.

UNCONTROLLED COPY WHEN DOWNLOADED
Check with FSIMS to verify current version before using

2) A part 125 operator and the repair station must follow the operator's FAA-approved inspection program. The repair station must determine if the housing is sufficient for the work performed.

3) A foreign air carrier or foreign person operating a U.S.-registered aircraft, and the repair station, must follow the operator's FAA-approved maintenance/inspection program. The repair station must determine if the housing is sufficient for the work performed.

Q. Verify Segregation and Protection of Parts. Verify that each workspace has areas for the proper segregation and protection of parts and subassemblies during all phases of maintenance, preventive maintenance, or alterations. Verify the following:

1) The differences between serviceable and unserviceable components, parts, and materials must be clearly distinguishable throughout each process.

2) Repair stations may accomplish this with suitable racks, hoists, trays, stands, or other means of segregation for storing and protecting all articles undergoing maintenance, preventative maintenance, or alterations.

3) Repair stations should segregate environmentally hazardous or sensitive operations so they do not adversely affect other maintenance or alteration of articles or activities. Examples of these operations are: avionics work, electrostatic discharge (ESD), battery maintenance, painting, surface treatments, composite repairs, nondestructive testing, cleaning, welding, and machining.

4) If the facility deals in non-aircraft parts, materials, or maintenance activities outside those normally performed at the repair station, the facility should segregate the aircraft function from other functions to preclude a repair station using unapproved parts or materials on an aircraft.

5) Repair stations must segregate articles and materials stocked for installation from articles and materials undergoing maintenance, preventive maintenance, or alteration.

R. Determine Adequacy of Environmental Conditions. The repair station must have sufficient ventilation, lighting, and control of temperature, humidity, and other climate conditions to ensure personnel are not adversely affected by the environmental conditions when performing maintenance, preventive maintenance, or alterations. In addition to reasonable heating, air conditioning, and lighting requirements, verify the following maintenance environmental conditions:

1) Instrument shops are environmentally and operationally controlled per the Original Equipment Manufacturer (OEM). This may include measurement of air cleanliness, such as clean room requirements. Composite layup and clean rooms are environmentally and operationally controlled per the OEM or other FAA-approved repair process.

2) Storage areas include proper storage for such items as flammables, sealants, chemicals, carcinogens, tires, or tooling, and are environmentally controlled in regards of temperature and humidity.

UNCONTROLLED COPY WHEN DOWNLOADED
Check with FSIMS to verify current version before using

3) Lighting is adequate for the type of processes performed in each area.

4) While physically inspecting the repair station, verify that facility diagrams and descriptions in the RSM are accurate. This includes any facilities used for spray painting, avionics, engine or airframe repair, or any other work that would have special requirements. Pay close attention to specific information detailed in the manual, such as:

- The type of heating,
- Lighting,
- Equipment location,
- Electrical,
- Compressed air outlets, and
- Ventilation.

S. Corporate Safety Culture. Repair stations must create a safe working environment that will help prevent personnel injury and damage to customer property. The housing and facilities should provide adequate security and fire protection. The PI should review the repair station's safety procedures. The PI should also consider that poor housekeeping, or improper maintenance of safety devices (such as eyewash stations, material safety data sheets (MSDS), and fire extinguishers) is a good indicator of the repair station's corporate culture.

NOTE: This inspection focuses on how the repair station follows its safety policies and procedures. Outside of the PI's jurisdiction are safety, fire and health rules, codes, and regulations, which vary from one state or county to another.

T. Inspect General Housekeeping. Inspect the repair station to determine that general housekeeping will not contaminate component parts and subassemblies undergoing maintenance. Repair stations should maintain all shops and hangars in a clean and orderly manner.

1) Methods should include procedures to prevent components or materials from damage from ESD. Materials should be packaged, handled, and protected in accordance with requirements for handling ESDs.

2) Testing facilities and test rigs should meet the component manufacturers' service criteria and contaminant prevention requirements. Scheduled maintenance of the testing rigs should document the cleanliness levels, filter replacements, calibration, etc.

6-1779 TASK OUTCOMES.

U. Complete the Task. Follow Volume 10 SAS guidance for Module 4 (Chapter 5), Data Collection and Data Reporting, and Module 5 (Chapter 6), Analysis, Assessment, and Action, and tracking of corrective action plans (CAP) in the Action Item Tracking Tool (AITT).

V. Conduct Debriefing. Brief the certificate holder on the inspection results. Discuss any deficiencies and possible corrective actions. The ASI can find instructions for conducting this briefing in Volume 1, Chapter 3, Section 1.

UNCONTROLLED COPY WHEN DOWNLOADED
Check with FSIMS to verify current version before using

W. Document the Task. File all supporting paperwork in the CHDO's office file and update the SAS Configuration Module 1 Vitals Information, as appropriate.

X. Compliance Action. Follow the process contained in Volume 14, Chapter 1, Section 2 to identify the root cause that led to any deviations from rules, standards, or procedures; resolve them; and return the repair station to full compliance.

6-1780 FUTURE ACTIVITIES. Follow Volume 10 to plan future risk-based surveillance in SAS.

RESERVED. Paragraphs 6-1781 through 6-1794.

UNCONTROLLED COPY WHEN DOWNLOADED
Check with FSIMS to verify current version before using

VOLUME 6 SURVEILLANCE

CHAPTER 9 PART 145 INSPECTIONS

Section 16 Safety Assurance System: Inspect a Part 145 Repair Station and its Authorization for Work Away From its Fixed Location

6-1950 REPORTING SYSTEM(S). Use Safety Assurance System (SAS) automation and the associated Data Collection Tools (DCT).

6-1951 OBJECTIVE. This section provides guidance for authorization and surveillance of a Title 14 of the Code of Federal Regulations (14 CFR) part 145 repair station performing aircraft maintenance away from its fixed location.

6-1952 GENERAL. This section lists circumstances by which personnel of a part 145 repair station may work away from a permanent fixed location:

Y. Special Circumstances. The Federal Aviation Administration (FAA) may authorize a repair station to perform work away for special circumstances on a temporary basis. Depending on the type of work and duration of the special circumstance, the FAA may authorize the following:

1) Temporary Basis—Short Term. When a special circumstance arises, such as a blown tire, inoperative radio, emergency repairs, preparation for a special flight permit, or navigation equipment changes.

2) Temporary Basis—Extended. A repair station may perform maintenance away from its fixed location for extended periods of time if it meets certain criteria. Part 145, § 145.203(a) states that the FAA determines these special circumstances. Such special circumstances may be alterations such as Supplemental Type Certificates (STC), or extended maintenance requests from operators at that location. This type of operation does not constitute the establishment of another repair station or a satellite repair station because it is temporary in nature. The repair station needs to provide the principal inspector (PI) a request that describes this type of work, duration, evaluation of housing and facilities, and controls to ensure the location meets the requirements of the rule.

NOTE: Per the circumstances in subparagraph 1) above, the repair station must submit a request to the PI for evaluation on a case-by-case basis. If the repair station has written procedures in the Repair Station Manual (RSM) that describe the type of work in subparagraph 1), the repair station only needs to notify the PI. The PI must verify this procedure is for emergency purposes only and not on a recurring basis or extended work away from station. Operations specification (OpSpec) D100 is not required for this type of work away.

Z. Recurring Basis (OpSpec D100). If the repair station intends to perform maintenance (such as mobile field services, field support, engine-on-wing repair, Nondestructive Testing (NDT), fuel tank or fuel cell repair, etc.) on a recurring basis at places other than its fixed location, the manual must include procedures for accomplishing the maintenance,

UNCONTROLLED COPY WHEN DOWNLOADED
Check with FSIMS to verify current version before using

preventive maintenance, or alterations. This will allow maintenance away from the repair station's fixed location as a part of everyday business rather than under special circumstances. When it is necessary to perform work on a recurring basis, the PI will issue OpSpec D100. The PI can find guidance for OpSpec D100 in Volume 3, Chapter 18, Section 10.

NOTE: Working away from the repair station is not equivalent to line maintenance or a geographic authorization.

6-1953 ADDITIONAL FIXED LOCATION. A repair station may have additional fixed locations (facilities) without certificating each facility as a standalone or satellite repair station. The FAA may grant this authorization if all of the facilities are localized and within a defined area, such as several buildings or hangars which may be on or near the same airport, or at or near the address stated on the repair station certificate. Additional locations may be particularly useful when other Federal laws or local ordinances require a repair station to use remote sites when performing some maintenance actions, such as functional testing of turbine engines. Local laws and noise abatement programs may force a repair station to another worksite. The FAA may find that the additional locations do not have a significant impact on the maintenance performed, provided the manual has sufficient procedures to ensure the airworthiness of articles being maintained.

AA. Additional Locations. All additional fixed locations must be under the full control of the repair station's primary facility. Tools, equipment, parts, personnel, etc., may be transported between the primary facility and the additional fixed location to satisfy the privileges and limitations of the certificate. Authorization of additional fixed locations does not constitute work away from the repair station under § 145.203. Additional fixed locations may perform continuous operations within the privileges and limitations of the certificate.

NOTE: The aviation safety inspector (ASI) and repair station accountable manager must collaborate when making a determination that repair station operations require additional locations. The repair station must ensure ASIs have reasonable access to all locations, without the inconvenience of extended travel distances. Extended travel between facilities may have an adverse impact on FAA oversight and surveillance capabilities. For unique or unusual circumstances, consideration of additional fixed locations outside the certificate-holding district office's (CHDO) area of responsibility requires coordination with the Aircraft Maintenance Division (AFS-300).

BB. Review Application. The principal inspector (PI) receives the application (FAA Form 8310-3, Application for Repair Station Certificate and/or Rating), manual revisions, and any other information necessary to determine the appropriateness of the request. The repair station must be approved for the use of additional fixed locations prior to exercising the privileges of its certificate and ratings at the additional facilities. The application must list each facility and its physical address. The inspector must:

1) Review the manual revisions that detail how the repair station will perform maintenance at the additional location.

UNCONTROLLED COPY WHEN DOWNLOADED
Check with FSIMS to verify current version before using

2) Review any other material or information submitted to assist the inspector in completing his or her review.

3) Inspect the additional location to verify that:

- It is within the local commuting area and does not pose an inconvenience to the inspector for traveling to the added location;
- The accomplishment of the work is appropriate under the repair station's certificate and ratings as listed on the OpSpecs; and
- It is under the full control of the repair station.

4) Issue OpSpecs (A101) to authorize continuous operations to be performed at each additional fixed location.

5) Conduct surveillance on the repair station's main facility and all additional fixed locations.

CC. RSM. The repair station must have procedures in its manual to describe how it will operate in this manner and remain compliant with its manual and the requirements of part 145 for the additional fixed location. The RSM must contain detailed procedures for the transport of equipment, parts, qualified personnel, etc., between facilities. The RSM should also outline procedures to ensure that adequate personnel are available to support the additional fixed locations/facilities while articles are undergoing maintenance.

DD. Quality Control Manual (QCM). The QCM must include how the repair station will continue to meet the requirements of part 145 and its manual at each additional location.

EE. Bilateral Aviation Safety Agreement (BASA) Including Provisions for Maintenance. When a repair station is located outside of the United States and is subjected to a BASA including maintenance provisions, the repair station may operate an additional fixed location (multiple facilities) under one FAA Air Agency Certificate, as long as the Aviation Authority conducts oversight of the facilities.

NOTE: See the applicable maintenance BASA conditions for additional fixed locations.

6-1954 COORDINATION REQUIREMENTS. If the repair station has an assigned principal maintenance inspector (PMI) and a principal avionics inspector (PAI), the two inspectors should coordinate the inspection between themselves.

6-1955 REFERENCES, FORMS, AND JOB AIDS.

FF. References (current editions):

- Title 14 CFR Part 145.
- Volume 1, Chapter 3, Section 1, Safety Assurance System: Responsibilities of Aviation Safety Inspectors.
- Volume 2, Chapter 11, Certification of a Part 145 Repair Station.

UNCONTROLLED COPY WHEN DOWNLOADED
Check with FSIMS to verify current version before using

- Volume 3, Chapter 18, Section 10, OpSpec D100, Work to Be Performed at a Place Other Than the Repair Station's Fixed Location (14 CFR Part 145, § 145.203(b)).
- Volume 10, Safety Assurance System Policy and Procedures.
- Volume 14, Chapter 1, Section 2, Flight Standards Service Compliance Action Decision Procedure.

GG. Forms. None.

HH. Job Aids. None.

6-1956 PROCEDURES.

II. Review Applicable Information. Before inspection, the PI should carefully review:

1) Part 145.

2) The RSM or QCM procedures about work away from the station.

3) OpSpec D100, if authorized.

4) The Safety Performance Analysis System (SPAS).

5) SAS Configuration Module 1 Vitals Information.

JJ. Inspection. Inspect a repair station performing work away from the fixed location under special circumstances.

1) Temporary Basis—Short Term. Review the repair station procedures to verify that procedures are in place to:

a) Control such items as equipment, tools, and required forms.

b) Confirm personnel are qualified for required work.

c) Conduct emergency work away from the station.

d) Review a representative sample of work packages completed away from station to confirm personnel completed the work per the procedures.

NOTE: The emergency work procedure should contain an explanation of emergency work away from the station as it relates to the repair station's ratings. The procedures should detail how the repair station will notify the CHDO and the PI.

NOTE: The PI will need to authorize each short-term temporary situation if the repair station does not have any procedures in their RSM. The repair station must notify the PI in all situations.

UNCONTROLLED COPY WHEN DOWNLOADED
Check with FSIMS to verify current version before using

2) Temporary Basis—Extended.

a) Contracted maintenance authorized by the FAA may take several months to complete. This operation does not establish another repair station or a satellite repair station because it is temporary in nature. Extended contracted work away from station must not exceed 1 year.

b) Repair station personnel intending to perform maintenance away from their fixed location for extended time periods must evaluate the housing and facilities where they will perform the maintenance to ensure the location meets the intent of part 145.

c) If they need additional time, repair station personnel must submit another request updating the original information and providing any new details on the contracted maintenance.

d) The repair station must prepare written documentation that reflects the air carrier's method for the acceptance of all repair station programs. The written documentation must also show the repair station's standard operating procedures (SOP) to ensure the repair station performs all maintenance per the air carrier's Continuous Airworthiness Maintenance Program (CAMP). The repair station must inform the air carrier of all contracted work. This allows the carrier's Continuing Analysis and Surveillance System (CASS) auditors to perform any inspections of the maintenance provider and correct all findings before work is performed.

e) Review the repair station request to verify:

1. The request includes the aircraft (make, model, and series (M/M/S)), the project to accomplish, the duration of the maintenance, the location of the maintenance, and a statement that the temporary facilities are suitable for the repair station's maintenance.

2. The request will control such items as equipment, tools, and required forms.

3. The request will ensure qualified personnel are available for the required project. The repair station must ensure its personnel understand that they must follow repair station procedures when performing maintenance away from station.

4. The request will provide the CHDO and the PI with a plan on how and where personnel will perform the project, to include:

- Controlling of parts,
- Tools,
- Maintenance data,
- Personnel,
- Required inspectors,
- Length of time the project will take, and
- Title of the person in charge of the project.

UNCONTROLLED COPY WHEN DOWNLOADED
Check with FSIMS to verify current version before using

NOTE: The PI must authorize extended temporary projects before the repair station sends crews, and must have a start date and estimated completion date. The PI should only authorize this request after ensuring repair station personnel can control the project as if they were completing it at the fixed station.

f) Review a representative sample of work packages completed away from station to confirm personnel completed the work per the procedures.

KK. Inspect a Repair Station Doing Work Away From the Fixed Location on a Recurring Basis (OpSpec D100).

1) Verify that the procedures for performing work away on a recurring basis are clearly defined in the RSM or QCM. OpSpec D100 must reference the section and chapter of these procedures in the RSM or QCM.

2) Review a representative sample of work packages completed away from the station to confirm personnel completed the work per the procedures in the RSM or QCM.

a) Verify that the repair station furnished its own tools and equipment.

NOTE: The repair station can have a lease agreement for tools and equipment if the procedures are contained in the RSM.

b) Verify that the repair station maintained a permanent fixed location even if the majority of its work is done at another facility.

3) Verify that the RSM contains procedures to ensure the remote location remains in compliance with part 145, and the RSM contains procedures for the following:

- Transporting tools and equipment to and from the worksite without damage;
- Ensuring that only qualified personnel are assigned to perform, supervise, and inspect the work completed;
- Ensuring that all air carrier maintenance programs are followed;
- Ensuring that technical data and records are available and properly followed;
- Identifying the mobile repair unit and providing a means of location or point of contact (POC) to allow the PI to conduct surveillance, as necessary; and
- Describing the repair station audit program for mobile repair unit and making the findings available to the PI. The repair station may provide the PI with a schedule of audits so the PI can accompany an audit as part of the surveillance program.

NOTE: A mobile repair unit is a vehicle deployed by the repair station to transport materials, equipment, data, and personnel from one location to another.

UNCONTROLLED COPY WHEN DOWNLOADED
Check with FSIMS to verify current version before using

4) Verify the repair station is following its quality control (QC) system, and confirm that:

- All forms are properly completed per the QC system;
- The repair station follows its calibration system for calibrated tools; and
- All parts are stored and protected as required in the QC system.

5) Verify that the repair station uses approved data when necessary.

NOTE: OpSpec D100 will only be issued for those repair stations performing repairs or alterations on a recurring basis.

LL. Analyze Findings. Follow Volume 10 SAS guidance for Module 4 (Chapter 5), Data Collection and Data Reporting and Module 5 (Chapter 6), Analysis, Assessment, and Action (AAA).

6-1957 TASK OUTCOMES.

MM. Complete the Task. Follow SAS guidance for Module 4. PIs follow AAA procedures for Module 5.

NN. Document the Task. Place all supporting paperwork in the certificate holder's office file. Update the Vitals tab in the SAS Configuration Module, as required.

OO. Compliance Action. Follow the process contained in Volume 14, Chapter 1, Section 2 to identify the root cause that led to any deviations from rules, standards, or procedures; resolve them; and return the repair station to full compliance.

6-1958 FUTURE ACTIVITIES. Follow Volume 10 to plan future risk-based surveillance in SAS.

RESERVED. Paragraphs 6-1959 through 6-1971.

UNCONTROLLED COPY WHEN DOWNLOADED
Check with FSIMS to verify current version before using

VOLUME 6 SURVEILLANCE

CHAPTER 11 OTHER SURVEILLANCE

Section 14 Safety Assurance System: Conducting Records Reviews and Aircraft Inspections Mandated by the Aging Airplane Rules for Parts 121, 129, and 135

6-2486 REPORTING SYSTEM(S). For Title 14 of the Code of Federal Regulations (14 CFR) parts 121, 129, and 135, use Program Tracking and Reporting Subsystem (PTRS) Activity Codes 3634, 5634, 3647, and 5647.

NOTE: This section is related to Safety Assurance System (SAS) Elements 4.2.1 (AW), Maintenance/Inspection Requirements, and 4.6.2 (AW), Maintenance Special Emphasis Programs, but not reported in SAS.

6-2487 OBJECTIVE. This section provides guidance on conducting aging airplane inspections and records reviews to accomplish the requirements of the Aging Airplane Safety Final Rule and the Aging Aircraft Safety Act of 1991 (the Act). The Act requires the Administrator to make inspections and to review the maintenance and other records of certain aircraft to decide whether they are maintained in an Airworthy condition. To accomplish this, the aviation safety inspector (ASI) will conduct structural spot inspections and aircraft records surveillance, as deemed appropriate. The air carrier, to accomplish the required aircraft records reviews and inspections, may use Designated Airworthiness Representatives (DAR) and/or Organization Designation Authority (ODA).

NOTE: For the purpose of this function, “the Administrator” is defined as ASIs, DARs, ODAs, or other persons so designated to accomplish these inspections.

6-2488 GENERAL.

PP.Basic Requirement. The basic requirement is to inspect each aircraft and review its records; however, a sampling of these tasks and records for each airplane along with routine surveillance of a certificate holder’s maintenance program will ensure that each airplane and its age-sensitive components are properly maintained. This guidance is applicable to each airplane operated under part 121 (except those airplanes operated solely within the state of Alaska); part 135 multiengine, in scheduled service (except those airplanes operated solely within the state of Alaska); and U.S.-registered, part 129 multiengine aircraft. Special coordinating instructions for aircraft operated under part 135 on-demand rules can be found in subparagraph 6-2493A. Aircraft and records inspections are reported in PTRS for all 14 CFR parts.

QQ. General.

1) Records Review. The ASI/DAR/ODA will review/sample the following records for each airplane described in subparagraph A above to ensure confidence that the carrier is maintaining adequate/reliable records:

UNCONTROLLED COPY WHEN DOWNLOADED
Check with FSIMS to verify current version before using

a) Total years in service.

b) Total flight hours of the airframe.

c) Total flight cycles of the airframe.

d) Date of last records review and inspection required by part 121, § 121.1105; part 129, § 129.105; and part 135, § 135.422.

e) Current status of life-limited parts of the airframe.

f) Time since last overhaul of all structural components required to be overhauled on a specific time basis.

g) Current inspection status of the airplane, including the time since the last inspection required by the inspection program under which the airplane is maintained.

h) Current status of the following, including method of compliance:

- Airworthiness Directives (AD), and
- Inspections and procedures required by § 121.1109 and § 129.109.

NOTE: The effective date of these rules is December 20, 2010.

i) A list of major structural alterations.

j) A report of major structural repairs and the current inspection status of those repairs.

2) Aircraft Inspections. The intent of the Act will be met by accomplishing structural spot inspections as outlined in Volume 6, Chapter 2, Section 6, Safety Assurance System: Conduct Spot Inspection of a Program Manager/Operator's Aircraft.

3) Federal Aviation Administration (FAA) Inspection Personnel. FAA ASIs who perform these inspections must possess a Mechanic Certificate with an airframe rating. It is important that ASIs are familiar with the type of aircraft and records system of the air carrier before performing these inspections. ASIs possess various degrees and types of experience. An ASI who needs additional information or guidance should coordinate with personnel experienced in that particular specialty. This can be accomplished through on-the-job training (OJT) provided by the office with responsibility for oversight of the air carrier the ASI will be inspecting.

4) Coordination Requirements.

a) It is essential for the certificate-holding district office (CHDO)/certificate management office (CMO) to coordinate with the operators and geographic inspectors to ensure that no unnecessary delays are incurred as a result of records reviews and aircraft inspections if inspections are to be accomplished using geographic ASIs.

UNCONTROLLED COPY WHEN DOWNLOADED
Check with FSIMS to verify current version before using

b) Geographic inspectors may be needed to assist the CHDO/CMO in performing these inspections/reviews. Coordination is required to transmit all inspection results and/or recommendations to the CHDO/CMO including a list of discrepancies found.

c) The CHDO/CMO will be responsible for notifying the certificate holder that the inspection/review has been completed.

6-2489 INITIAL NOTIFICATION AND PLANNING.

RR. Initial Notification.

1) Sixty-Day Notification to the FAA. The rules require that the operators notify the FAA at least 60 days before the airplane and its records will be available for inspection and review. Operators should be encouraged to provide advanced planning schedules of aircraft undergoing heavy maintenance. Principal maintenance inspectors (PMI) should work closely with their operator during this period to address any issues that could delay the records review and inspection or prevent the airplane from returning to service as scheduled.

2) Unforeseen Scheduling Conflict. The rules provide for a 90-day extension to the 7-year interval for repetitive records reviews and aircraft inspections. Should an unforeseen operator scheduling conflict occur, the CHDO/CMO may approve an extension of up to 90 days, provided the operator presents written justification for the scheduling conflict. Electronic, facsimile, or other forms of notification may be accepted. Operators should be encouraged to provide ample time for the CHDO/CMO to respond to the extension request.

NOTE: Extensions may only be approved for the 7-year repetitive inspection intervals. In all cases, the initial compliance threshold to the applicable rule must be met.

NOTE: An extension can only be granted by the CHDO/CMO.

SS. Heavy Maintenance Check. The Act states that the records reviews and inspections will be carried out as part of the operator's heavy maintenance check. For the purpose of complying with this statute, a heavy maintenance check is defined as a "C" check or segment thereof, a "D" check or segment thereof, or other scheduled maintenance visits where structural inspections are accomplished.

TT. Planning. The records review(s) can be, and usually will be, accomplished separately from the aircraft inspection. This is because many operators perform maintenance in one location while the records may be maintained in a different location. If the records review and aircraft inspection are conducted separately, the operator should provide a summary of any additional records entries at the time of the aircraft inspection, such as ADs accomplished and major repairs accomplished.

UU. Records Reviews and Inspections. Records reviews and airplane inspections for parts 121, 129, and 135 scheduled operators will be similar.

UNCONTROLLED COPY WHEN DOWNLOADED
Check with FSIMS to verify current version before using

1) Records Review.

a) The operator may provide actual "hardcopies" of the records or summaries of compliance as per its approved recordkeeping program.

b) The ASI/DAR/ODA should plan to sample the records to verify accuracy.

2) Aircraft Inspection.

a) Confirm the aircraft is available. Schedule the inspection when the aircraft has been sufficiently prepared for inspection (i.e., opened/cleaned).

b) The ASI should be familiar with the aircraft type and inspection program the aircraft is maintained under.

c) Based on the records review and the planned maintenance, the ASI/DAR/ODA should select several structural inspection items to sample, if practical. Included in the items selected for sampling should be job task cards that indicate the:

- Task,
- Method of compliance,
- Tooling required, and
- Required signoffs.

3) Air Carrier Notification. The CHDO/CMO must notify the operator that the records reviews and inspections are complete. Because the aircraft records reviews and/or inspections may be accomplished by different inspectors in different geographic locations, coordination of these efforts is essential. Final notification to the operator will be made by the CHDO/CMO.

6-2490 PREREQUISITES AND COORDINATION REQUIREMENTS.

VV. Prerequisites.

- Familiarity with the aircraft type and inspection program the aircraft is maintained under.
- FAA Course 27100061, Flight Standards Aging Airplane Safety Rule (AASR).

WW. Coordination. This task requires coordination between ASIs, DARs, and ODAs. It also requires coordination between CHDO/CMO and operators/geographic units.

UNCONTROLLED COPY WHEN DOWNLOADED
Check with FSIMS to verify current version before using

6-2491 REFERENCES, FORMS, AND JOB AIDS.

XX. References (current editions). FAA Order 8900.1, Volume 6, Surveillance:

- Chapter 2, Parts 121, 135, and 91K Inspections,
  - Section 6, Safety Assurance System: Conduct Spot Inspection of a Program Manager/Operator's Aircraft,
  - Section 35, Safety Assurance System: Inspect Section 135.411(a)(1) (Nine or Less) Operator's Maintenance Records, and
  - Section 36, Safety Assurance System: Inspect Parts 91K and 121/135 (10 or More) Operator's Maintenance Records; and
- Chapter 4, Part 129 Inspections: Monitor Maintenance Program for U.S.-Registered Aircraft Operated by a Foreign Operator Under Part 129; and
- Chapter 11, Section 24, Safety Assurance System: Evaluate/Inspect Parts 121 and 129 Operators' Electrical Wiring Interconnection Systems Maintenance Program.

YY. Forms. None.

ZZ. Job Aids. None.

6-2492 MAINTENANCE RECORDS REVIEW.

AAA. Receive the Records. The certificate holder will coordinate with the FAA to provide the location and the status of the records required by §§ 121.1105, 129.105, and 135.422. Volume 6, Chapter 2, Sections 6, 35, and 36, and Volume 6, Chapter 4 provide necessary guidance for evaluating the required air carrier maintenance records.

BBB. Conduct the Review. The ASI/DAR/ODA will review/sample the records identified in subparagraph 6-2488B1).

NOTE: The records review and airplane inspection may be carried out by different ASIs/DARs/ODAs in different locations. This will require coordination between the inspectors to ensure discrepancies noted in either the records review or the airplane inspection are investigated to ensure compliance with regulations.

6-2493 AIRCRAFT INSPECTIONS.

CCC. Plan the Inspection. The ASI will coordinate with the certificate holder as to the scope and extent of the planned inspection. Volume 6, Chapter 2, Section 6 provides necessary guidance for accomplishing structural spot inspections.

1) The ASI/DAR/ODA should select structural inspections, Electrical Wiring Interconnection Systems (EWIS), Corrosion Prevention and Control Programs (CPCP) tasks, or major repairs/modifications that are scheduled to be accomplished during this maintenance visit. If possible, supporting documentation for these tasks should be obtained before conducting the planned inspection.

UNCONTROLLED COPY WHEN DOWNLOADED
Check with FSIMS to verify current version before using

2) While performing these inspections, every effort should be made to avoid interfering with, or inconveniencing, the planned/scheduled maintenance.

DDD. Observe Maintenance Tasks. Observe maintenance tasks to ensure that:

- Work instructions provide sufficient detail to accomplish the scope of the required maintenance task;
- Required tooling and materials are available and used; and
- Work is accomplished by properly trained and qualified personnel.

6-2494 TASK OUTCOMES.

EEE. Complete the PTRS Record. Complete the PTRS record to track the accomplishment of these inspections. Use activity code 3647 or 5647 for the aircraft inspection and 3634 or 5634 for the records review. Enter "AGINGRIR" in the "National Use" block of Section I. In Section IV, the "Comment" block, record airplane times, cycles, inspection status, and other required data.

FFF. Complete the Task. Successful completion of this task will result in the following:

1) The cognizant PMI will be notified of any significant findings.

2) ASIs, designees, or the operator will notify the cognizant PMI electronically or verbally upon completion of the records review or aircraft inspection so that no delay will be incurred in notifying the operator.

3) The PMI will notify the certificate holder of any findings through standard office procedures.

4) The PMI will notify the certificate holder that the records review and inspection have been accomplished for a specific airplane. This will be accomplished via electronic, facsimile, or other accepted forms of notification.

NOTE: Because records reviews and the structural spot inspections may be completed on different dates, therefore the date of notification to the operator of completion of the records and aircraft inspection will be used to determine the due date of the next required inspection.

5) If DARs/ODAs accomplished the records reviews and aircraft inspections, they shall submit a report to the CHDO/CMO indicating the aircraft inspected. This report may be provided directly from the DAR/ODA or from the operator. The information provided must include the following:

- Identification number of the aircraft,
- Total years in service,
- Total flight hours of the airframe, and

UNCONTROLLED COPY WHEN DOWNLOADED
Check with FSIMS to verify current version before using

- Date of last records review and inspection required by the aging airplane rules.

6-2495 FUTURE ACTIVITIES. ASIs assigned to parts 121, 129, and 135 certificate holders will accomplish structural spot inspections and aircraft records surveillance, as required by the Act.

RESERVED. Paragraphs 6-2496 through 6-2515.

UNCONTROLLED COPY WHEN DOWNLOADED
Check with FSIMS to verify current version before using

VOLUME 6 SURVEILLANCE

CHAPTER 13 ENHANCED REPAIR STATION AND AIR CARRIER CONTRACT OVERSIGHT SYSTEM

Section 3 Reserved

RESERVED. Paragraphs 6-2916 through 6-2955.

UNCONTROLLED COPY WHEN DOWNLOADED
Check with FSIMS to verify current version before using

VOLUME 8 GENERAL TECHNICAL FUNCTIONS

CHAPTER 3 MISCELLANEOUS TECHNICAL FUNCTIONS

Section 5 Risk Assessments for Various Airport Aeronautical Activity

8-3-5-1 PROGRAM TRACKING AND REPORTING SUBSYSTEM (PTRS) ACTIVITY CODE. Enter "1855/3683/5683" in the "Activity Code" box of the PTRS form; enter "BTRA" in the "National Use" box if the activity is a Banner Towing Aeronautical Activity Risk Assessment, "PORA" if it is a Parachuting Aeronautical Activity Risk Assessment, "GORA" if it is a Glider Aeronautical Activity Risk Assessment, or "PPRA" if it is a Powered Parachute (PPC) Aeronautical Activity Risk Assessment. If there is an operation not covered above, or if an item or procedure should be added or deleted, contact the General Aviation and Commercial Division (AFS-800) for additional guidance.

NOTE: An airworthiness maintenance or avionics aviation safety inspector (ASI) may be assigned if he or she has operational experience for the activity that is being assessed.

8-3-5-3 OBJECTIVE.

A. Risk Assessment. The objective of this task is to perform a risk assessment of a proposed or existing aeronautical activity at an airport in order to provide the results to the Airport District Office (ADO) and/or regional Airports Division. Successful completion of this task results in providing a completed risk assessment to the Airports Division, showing the level of risk for the aeronautical activity being assessed, and possible mitigations needed to reduce the risk assessed. The assigned Flight Standards inspector will use the appropriate attached figure to determine the level of risk. The three levels are: low, medium, or high.

1) High Risk. High risk is unacceptable within the Office of Airports (ARP) Safety Management System (SMS). If a hazard presents a high initial risk, the proposal cannot be carried out unless hazards are further mitigated so risk is reduced to a medium or low level.

2) Medium Risk. Medium risk is acceptable within the ARP SMS. A medium risk is the minimum acceptable safety objective.

3) Low Risk. Within the ARP SMS, low risk is the target. Low risk is acceptable without restriction.

B. Risk Mitigation. More than one level of risk can be presented with associated mitigating procedures. For example, a high-risk level may be mitigated to a low-risk level if a safety mitigation procedure was put in place.

8-3-5-5 GENERAL.

A. Request for Onsite Evaluation. Airports that receive Federal Aviation Administration (FAA) funding are obligated to support all aeronautical activities unless a particular activity presents an undue safety issue.

UNCONTROLLED COPY WHEN DOWNLOADED
Check with FSIMS to verify current version before using

1) If that activity or proposed activity is restricted by the airport authority, representatives of the activity may feel they are not being treated fairly and may make a complaint to either the FAA Airports Division or the Airport Compliance Division (ACO-100). Upon receipt of a complaint or request, ACO-100, in coordination with the Airports Division (i.e., ADO or regional Airports Division office) initiates the aeronautical activity risk assessment process for the proposed or existing aeronautical activity in question. The scope of the aeronautical activity risk assessment is to determine that the aeronautical activity in question can safely conduct operations that ensure separation from other aeronautical activities operating within the same airport environment. There is an underlying assumption that all aeronautical activity operations are being conducted in compliance with existing FAA regulatory requirements and current policy. Any areas of noncompliance with regulatory or policy requirements identified during the aeronautical activity risk assessment will be forwarded to the responsible line of business (LOB) for review and action, as appropriate.

2) If a safety issue cannot be resolved, after review and formal documentation is completed by the Airports Division (i.e., ADO or regional Airports Division office), ACO-100 will assemble an FAA team consisting of representatives from regional airports, Flight Standards, and Air Traffic Control (ATC) (as needed) to conduct an onsite aeronautical activity risk assessment process for the proposed or existing aeronautical activity in question.

NOTE: The ADO or regional Airports Division office may contact the jurisdictional Flight Standards District Office (FSDO) during their initial review (desk audit) or with regard to a complaint for technical input on a safety issue via telecon or email.

3) The request for an aeronautical activity risk assessment process is initiated by ACO-100 in coordination with the Airports Division (i.e., ADO or regional Airports Division office) requesting an aeronautical activity risk assessment from the General Aviation Operations Branch (AFS-830), who coordinates with the responsible Flight Standards office, specifically the responsible Technical Operations branch. The responsible Flight Standards office then forwards that request to the jurisdictional FSDO asking it to participate in an onsite evaluation in the event of one of the following:

a) An informal complaint filed under Title 14 of the Code of Federal Regulations (14 CFR) part 13, Investigative and Enforcement Procedures;

b) A formal complaint filed under 14 CFR part 16, Rules of Practice for Federally-Assisted Airport Enforcement Proceedings; or

c) A request from a regional Airports Division office. The request from a regional Airports Division office will identify the specific circumstances or documented safety issue that justifies a risk assessment for the identified aeronautical activity. The following meets the criteria for a request:

UNCONTROLLED COPY WHEN DOWNLOADED
Check with FSIMS to verify current version before using

- Change in the status quo for existing aeronautical activity (e.g., a new type of aeronautical activity or significant operational change) at the identified airport and documented safety issue;
- Existing aeronautical activity and a documented safety issue; or
- Initial proposal for an aeronautical activity and a documented safety issue.

NOTE: If a documented safety issue is identified for an aeronautical activity covered under this policy, it does not automatically generate a requirement for a risk assessment to be conducted. When Flight Standards receives a request for an aeronautical study for a parachute, banner tow, glider, PPC aeronautical activity, they should stand by until ACO-100 in coordination with the Airports Division (i.e., ADO or regional Airports Division office) requests an aeronautical activity risk assessment from AFS-830.

4) The Airports Letter of Request (Figure 8-3-5G) for an aeronautical activity risk assessment that is sent to Flight Standards (AFS-830, responsible Flight Standards office, and FSDO) should contain the following items:

- The type of aeronautical activity being evaluated;
- The rationale why the aeronautical activity or proposed activity is restricted as given by the airport authority;
- The aeronautical activity (parachute, banner tow, etc.) safety issue identified (if applicable);
- A diagram of the proposed ground and/or aerial operations area(s), if known;
- An airport location map with a description of the location and geographic coordinates;
- An airport layout plan including obstacles, Navigational Aids (NAVAID), noise sensitive areas, instrument approach corridor(s) and traffic pattern(s) if, or when, the airport is not Class D;
- Any training material or materials available to users about the operation via a public website;
- A current aerial photo of the airport; and
- Current or proposed procedures for conducting operations on the airport.

B. Introduction to the Risk Assessment. The purpose of the risk assessment is to determine the risk level for a particular aeronautical activity at an airport. Airport sponsors should be reminded that in all cases, the FAA will make the final determination on the reasonableness of the sponsor's proposed restrictions. Therefore, the results of the risk assessment conducted by the FAA team will be used to help the regional Airports Division determine whether an activity can be safely accommodated at the airport.

C. FSDO Responsibility. The FSDO having jurisdiction over the airport is responsible for conducting the requested risk assessment. However, if the FSDO manager feels that there is no qualified ASI in that FSDO, he/she will contact the responsible Flight Standards office for assistance. The responsible Flight Standards office should attempt to find another ASI within the region who is qualified.

UNCONTROLLED COPY WHEN DOWNLOADED
Check with FSIMS to verify current version before using

NOTE: ASIs must complete on-the-job training (OJT) or electronic Learning Management System (eLMS) training prior to conducting a risk assessment.

D. Conducting the Risk Assessment. A risk assessment will normally be completed by a team consisting of an FAA ASI, an FAA Airports Representative, and an FAA Air Traffic Representative. The FAA Airports Representative is designated as the team lead. It may be necessary for additional FAA specialists to be present for the assessment in certain situations. However, in some cases, where there is a review of an existing operation, there may not be a need for all team members to be present for the risk assessment. This will be determined on a case by case basis by the team lead and justification will be documented in the final report. A member of the airport management and a representative of the operation being assessed must be available during the assessment to provide information to the team. In order for the team to complete the assessment in the most productive and efficient manner, external personnel who are not representatives of the airport sponsor, or of the operator, are not permitted to participate in the assessment unless the Airports Representative (team leader) approves in order to gain information necessary for the assessment.

1) Normally, the FAA will only conduct a risk assessment at an airport when a complaint is received from an operator or activity that has not been given appropriate access to an airport that receives FAA Airport Improvement Program (AIP) funds. This usually occurs when an airport sponsor feels that a particular aeronautical activity is, or would be, unsafe at that airport.

2) The assessment will be conducted as follows:

a) The assessment team will meet for a plan of action meeting or telecon, which will be followed by the conduct of an onsite evaluation. They will complete the applicable checklist contained in Figures 8-3-5A through D. Each question will relate to a specific risk factor involving the interaction of the assessed operations with other aviation activities. The team will assess and assign the initial risk rating to each question based on the specific circumstances existing at the airport. The initial risk rating for each question will be found next to the question.

b) The risk rating for each question in the figures is an assessment of how the operation affects or is affected by other aeronautical activity at the airport.

c) After all the risk factors are considered, the team will assign an initial risk rating to the entire assessment. Instructions on assigning the initial risk rating are located in the associated figure. Recommended mitigation measures for each risk factor have been provided in the associated figure.

NOTE: Not all suggested mitigations need to be applied, only those that can reasonably reduce the risk.

d) All operations have an element of risk that impact safety. With the FAA's support, it is the airport management's and operator's responsibility to lower that risk as much as practical utilizing recommended or other mitigation strategies. All of the questions in the risk assessment figures have suggested mitigations to lower the risk.

UNCONTROLLED COPY WHEN DOWNLOADED
Check with FSIMS to verify current version before using

e) The FAA AFS Representative makes the final safety recommendation to the FAA Airports Representative designated as the team lead.

f) The regional Airports Division has the final say in allowing an aeronautical activity. Typically, the lower the risk, the higher the chance is that the regional Airports Division will allow that activity.

g) For an initial assessment, the assessment team must further evaluate the individual factors with high or medium risk ratings to determine if the high or medium risk(s) can be reasonably mitigated to a lower level based on the circumstances existing at the airport. It is expected that the mitigation measures contained in each question will effectively mitigate most risks to a lower level. However, the team conducting the risk assessment may recommend additional mitigation measures beyond those suggested in the question. There may be circumstances when there is a safety observation that is not addressed in any of the standard questions and additional risk mitigations need to be developed to address the new safety observation. This is a nonstandard risk mitigation measure and must be coordinated and accepted via email concurrence from AFS-830 before it is added to the final report. This coordination must be completed within 15 business-days of the risk assessment to ensure the final report is completed in a timely manner.

NOTE: On an annual basis, all of the nonstandard risk mitigations will be reviewed by AFS-800 (AFS-830 Branch Manager), to determine if the risk mitigation checklist should be amended to add any nonstandard risk mitigations as a standard mitigation or to remove/revise any standard mitigations. AFS-800 will initiate coordination with ACO-100 for concurrence with any changes, and coordinate the revised policy for implementation.

h) It is also expected that in some instances multiple mitigation measures may be required to effectively reduce the risk rating for each factor. For a high initial risk, the risk rating may only be reduced if certain mitigation measures are in place. The required mitigation measures may vary depending on the circumstances existing at the airport. For the purpose of this assessment, any high risk that cannot be mitigated will result in an overall high risk assessment. The same is true for a medium risk. If the highest risk that cannot be mitigated is a medium risk, it will result in an overall medium risk assessment.

UNCONTROLLED COPY WHEN DOWNLOADED
Check with FSIMS to verify current version before using

i) When selecting mitigation measures, the team must discuss and consider all mitigation measures that may apply to each specific risk factor. The team should then select all mitigation measures which are deemed applicable and appropriate. Special consideration should be given to the overall effectiveness of the mitigation to reduce risk, particularly when a high risk is mitigated to a low risk.

j) Any required mitigation measures which are not considered to be applicable or appropriate by the assessment team should be removed from consideration.

k) After mitigations are identified, they will be presented to the operator and the airport management. The team must discuss each mitigation measure with the airport management and operator representatives to ensure both parties are aware of the mitigation, and each party's responsibility with regard to implementation of each mitigation measure. The airport management and operation representatives will agree which mitigations will be implemented. The airport management and operation representatives must then initial the appropriate space beside the mitigation measure(s) they have agreed to implement, the timeline for implementation, and sign the completed report.

NOTE: If the airport manager or operation representative refuses to sign the document, then annotate on the signature line that they were present during the assessment, but refused to sign. Likewise, if a legitimate mitigation is available but refused by either the airport manager or the operator for unjustifiable reasons, the mitigation and reason should be noted on the assessment checklist.

l) Based on this information, document the final overall risk assessment as determined: high, medium, or low.

1. Overall risk without identified mitigations.

2. Overall risk with all identified mitigations implemented.

m) The assigned Flight Standards inspector(s) will prepare a Flight Standards Risk Assessment Memo to be sent to AFS-830 and Airports Division. The memo will include the overall risk and, if required, an implementation plan and timeline prepared by the airport management and operation representatives. (See Figure 8-3-5E, Flight Standards Risk Assessment Memo.)

n) The Flight Standards Risk Assessment Memo and report is coordinated through the jurisdictional FSDO, responsible Flight Standards office, and AFS-830; and sent to the Airports Division for final determination of the extent of the airport's obligations to accommodate the proposed activity.

o) The Airports Division will send a letter to the airport manager and the operator with the final determination of the extent of the airport's obligations to accommodate the proposed activity. The FSDO, responsible Flight Standards office, and AFS-830 will also receive a copy of the final determination Airports Division letter. (See Figure 8-3-5F, Airports Risk Assessment Letter.)

UNCONTROLLED COPY WHEN DOWNLOADED
Check with FSIMS to verify current version before using

8-3-5-7 PREREQUISITES AND COORDINATION REQUIREMENTS.

A. Prerequisites. Knowledge of the requirements of 14 CFR part 91 and FAA policies, and qualification as an ASI (Operations) or an ASI (Airworthiness), if they have operational experience for the aeronautical activity being evaluated. Experience in the type of operation being evaluated is preferable.

B. Coordination. The risk assessment will normally be conducted as a risk assessment team. ACO-100, in coordination with the regional Airports Division or the ADO, will assign the team leader. The team leader will contact the responsible Flight Standards office, the responsible Technical Operations branch, who will determine and coordinate with the jurisdictional FSDO. AFS-830 will coordinate with the responsible Flight Standards office, who will coordinate with the jurisdictional FSDO. The FSDO manager will assign a Flight Standards inspector(s) that has operational experience for the aeronautical activity being evaluated. This task may require coordination with the Front Line Manager (FLM). The responsible Flight Standards office will notify AFS-830 and ACO-100 of the assigned FSDO and ASI. The assigned ASI, in coordination with the team, evaluates the risk level of the proposed or existing operation and advises the ADO and/or regional Airports Division and AFS-830 of the findings.

1) The risk assessment team consists of personnel from Airports (the team leader), Air Traffic, and Flight Standards. The team lead will determine who needs to be present when the risk assessment is completed.

2) The assigned Flight Standards inspector(s) will use the attached Figures 8-3-5A through D with the team to complete this portion of the risk assessment. The outcome of this portion of the risk assessment should be completed to the satisfaction of the entire team. This may require a meeting or a telecon with the entire team.

3) This task requires coordination with the regional Airports and AFS Divisions and the Air Traffic Organization (ATO). It may also require coordination between Flight Standards Operations and Airworthiness inspectors, depending on the type of aeronautical activity. It may require coordination with Air Traffic Controllers/Specialists and/or Tech Ops depending on the ATO considerations.

8-3-5-9 REFERENCES, FORMS, AND JOB AIDS.

A. References (current editions):

- Title 14 CFR Parts 91, 103, and 105.
- Advisory Circular (AC) 70/7460-1, Obstruction Marking and Lighting.
- AC 105-2, Sport Parachuting.
- AC 150/5210-20, Ground Vehicle Operations to Include Taxiing or Towing an Aircraft on Airports.
- AC 150/5345-28, Precision Approach Path Indicator (PAPI) Systems.
- AC 150/5345-52, Generic Visual Glideslope Indicators (GVGI).
- FAA Order 5050.4, National Environmental Policy Act (NEPA) Implementing Instructions for Airport Actions.

UNCONTROLLED COPY WHEN DOWNLOADED
Check with FSIMS to verify current version before using

- FAA Order 5190.6, FAA Airport Compliance Manual.
- FAA/FS-I-8700-1, Information for Banner Towing Operations.
- Interim Operational Approval Guidance 08-01, Unmanned Aircraft Systems Operations in the U.S. National Airspace System.
- JO 7400.2, Procedures for Handling Airspace Matters.

B. Forms:

- PTRS Form.
- Figure 8-3-5A, Risk Assessment for Banner Towing Operations at an Airport.
- Figure 8-3-5B, Risk Assessment for Parachuting Operations at an Airport.
- Figure 8-3-5C, Risk Assessment for Glider Operations at an Airport.
- Figure 8-3-5D, Risk Assessment for Powered Parachutes, Ultralight Vehicles, or Similar Performing Aircraft at an Airport.

C. Job Aids. None.

8-3-5-11 PROCEDURES.

A. Open PTRS. Upon receipt of a request from the responsible Technical Operations branch, and assignment from the FSDO manager, initiate coordination with the Airports Division assigned team lead. Open a PTRS file. Document in PTRS: the FAA Airports team lead and members, additional supporting personnel, and the airport manager and operator.

B. Contact Appropriate Personnel. In coordination with the team lead, contact the airport manager, ATO facility that controls the airspace around the airport, Airways Facilities if navigation aids are a concern, flight schools, and other operators and users on the airfield for information when necessary.

C. FAA Team. In coordination with the team lead, determine who will be on the FAA team conducting the onsite risk assessment; and coordinate with a member of the airport management and a representative of the operation being assessed to set a time and location to meet, and to conduct the risk assessment. Request any additional materials needed.

D. Letter of Request Review. The FAA team may validate the safety concerns identified in the Letter of Request for an aeronautical activity risk assessment provided by the Airports Division with an onsite evaluation. The FAA team will review all materials for accuracy and completeness prior to conducting the risk assessment at the airport and discuss any concerns in advance.

E. Conduct Risk Assessment. Within 60 business-days of the initial Letter of Request, the FAA team should have a plan of action meeting or telecon, then convene at the airport and tour the airport before beginning the risk assessment to help visualize how some of the questions will be answered. A current and approved airport layout plan, airport diagram, and airport Terminal Instrument Procedures (TERPS) manual (if applicable) must also be available for reference during the assessment.

UNCONTROLLED COPY WHEN DOWNLOADED
Check with FSIMS to verify current version before using

1) Some questions will need to be verified. For example, the use of an Aeronautical Advisory Station (UNICOM)/common traffic advisory frequency (CTAF) announcing that certain operations are being conducted and their location on the airport. The word "Verify" will follow the question on those items that need to physically be verified. Document verification in the "Verification Notes" section after each question. Scan and electronically attach to the risk assessment checklist any relevant documents and/or procedures supporting the activity verified.

2) When marking the checklist boxes, use "C" for Currently in place, and "P" for Proposed mitigations.

3) After all the risk factors are considered, the team will assign an initial risk rating to each question and to the entire assessment. Instructions on assigning the initial risk rating are located in the associated figure. Recommended mitigation measures for each risk factor have been provided in the associated figure, as has the associated rating scale: (L) Low, (M) Medium, or (H) High. In those cases where a "Yes" answer results in a high-risk level and a "No" answer results in a low-risk level, a moderate-risk level can be obtained by mitigating the high risk. The same holds true for questions where a "No" answer results in a high-risk level and a "Yes" answer results in a low-risk level.

4) Within 15 business-days from the completion of the risk assessment, the FSDO inspector, in coordination with input from the FAA team, will prepare an Flight Standards memo and the completed risk assessment report that is to be sent to the regional Airports Divisions team lead representative through the jurisdictional FSDO, responsible Flight Standards office, and AFS-830. The Flight Standards memo will state the initial risk level with current mitigations in place and the risk level after all identified proposed mitigation have been completed.

5) In those cases where the operator needs time to develop and/or institute risk mitigations, the regional Airports Division will inform the operator and the airport manager that the operator needs more time to develop and/or institute risk mitigations, the risk assessment memo should note that the operator has proposed a long term plan. The memo should provide any details that were readily available at the time the risk assessment was conducted.

6) The regional Airports Division will send a letter to the airport manager and the operator with the final determination of the extent of the airport's obligations to accommodate the proposed activity. The FSDO, responsible Flight Standards office, and AFS-830 will also receive a copy of the final determination Airports Division letter.

7) The regional Airports Division will be responsible for coordination and closeout of any risk mitigation plans submitted.

8) The Airports Division can request that a re-evaluation of the risk assessment be completed by Flight Standards after the proposed risk mitigation has been implemented.

F. Close PTRS. Make appropriate PTRS entries, noting any recommendations from Flight Standards. If the operator developed a plan to institute risk mitigations, the FSDO inspector should note the initial risk level and risk level after all mitigations are completed. If long term risk mitigation is proposed, the FSDO inspector should note the strategy proposed and any plan the operator shared for completion.

UNCONTROLLED COPY WHEN DOWNLOADED
Check with FSIMS to verify current version before using

G. FSDO File Preparation. Prepare the FSDO file on the applicant that includes a copy of the following documents:

- Initial Airports Letter of Request for risk assessment;
- Concurrence of nonstandard risk mitigations;
- Flight Standards risk assessment report;
- Risk mitigation plan, and any attachments; and
- Flight Standards Risk Assessment Memo, Airports Risk Assessment Letter, and any other correspondence.

H. Risk Assessment Coordination. An electronic copy of the Flight Standards Risk Assessment Memo will be prepared by the FSDO inspector and sent to:

1) Flight Standards Offices. The responsible Technical Operations branch and AFS-830.

2) Airports Office. ACO-100 through the regional Airports Divisions representative.

3) Local FSDO. The FSDO that conducted the risk assessment will retain a copy of the documents required to be in the FSDO file. If the risk assessment was conducted from a different FSDO, a copy of the initial Airports Letter of Request for risk assessment, Flight Standards Risk Assessment Memo, Airports Risk Assessment Letter, and any other correspondence will be forwarded to the jurisdictional FSDO and maintained in the FSDO file.

8-3-5-13 TASK OUTCOMES. Completion of this task results in:

- A completed risk assessment.
- Submittal of the risk assessment to the representative from the Airports Division.
- Submittal of a copy of the risk assessment to the appropriate Flight Standards Division.
- Retention of a copy of the completed risk assessment in the responsible FSDO's office files.

8-3-5-15 FUTURE ACTIVITIES.

- Future surveillance.
- Evaluation of site for additional users.
- A re-evaluation may be required if mitigation strategies are implemented, if requested by ACO-100 through AFS-800.

UNCONTROLLED COPY WHEN DOWNLOADED
Check with FSIMS to verify current version before using

Figure 8-3-5A. Risk Assessment for Banner Towing Operations at an Airport

☐ Proposed Banner Towing Operation ☐ Existing Banner Towing Operation

Airport Name _____

Airport Point of Contact _____

Banner Towing Company Name _____

Banner Towing Company Point of Contact _____

Date of Assessment _____

Banner Towing Operation Areas of Safety Considerations

Rating Scale: (L) Low, (M) Medium, or (H) High

1. (a) Does the airport have written airport procedures that include banner towing operations and are they available to airport users? (Verify.)

☐ Yes = L ☐ No = M*

When marking the checklist boxes, use "C" for mitigations "Currently" in place, and "P" for "Proposed" mitigations.

☐ Create airport procedures that include the banner towing operation.

☐ _____

☐ _____

* Mark the "Proposed" mitigated risk level if it is reduced for any items listed above that are added and concurred with by the airport and the operation representative:

☐ Low ☐ Medium

Mitigation Concurrence: Airport Representative _____

Banner Towing Operation Representative _____

Verification Notes: _____

_____

(b) Is there a procedure for notifying airport users of changes to the airport procedures?

☐ Yes = L ☐ No = M*

UNCONTROLLED COPY WHEN DOWNLOADED
Check with FSIMS to verify current version before using

When marking the checklist boxes, use "C" for mitigations "Currently" in place, and "P" for "Proposed" mitigations.

☐ Establish airport processes to notify airport users about airport procedures that include banner towing operations.

☐ Determine if procedures are written into the banner towing operation lease agreement.

☐ Notify airport tenants about procedures and provide updates as needed.

☐ Verbal communications (by telephone or in person) with tenants.

☐ Hold annual safety meetings for airport tenants and users to describe procedures, and establish a procedure for educating new airport tenants and users of these procedures.

☐ Website for the airport or city that includes the current airport procedures.

☐ _____

☐ _____

* Mark the "Proposed" mitigated risk level if it is reduced for any items listed above that are added and concurred with by the airport and the operation representative:

☐ Low ☐ Medium

Mitigation Concurrence: Airport Representative _____

Banner Towing Operation Representative _____

Verification Notes: _____

_____

2. Is this a 14 CFR part 139 airport? If yes, what is the frequency of scheduled air carrier takeoffs and landings per day during daylight hours? (Verify.)

Use (L) for 25 or fewer, (M*) for 26 to 50, and (H*) for more than 50.

☐ Yes* = ____ ☐ No = L

When marking the checklist boxes, use "C" for mitigations "Currently" in place, and "P" for "Proposed" mitigations.

☐ Restrict banner towing operations to times when air carrier operations are not scheduled.

☐ Establish procedures that keep banner towing operations from interfering with air carrier operations (e.g., separate pattern to a pick-up/drop-off area well clear of air carrier runway, and different part of the airport).

☐ _____

☐ _____

UNCONTROLLED COPY WHEN DOWNLOADED
Check with FSIMS to verify current version before using

* Mark the "Proposed" mitigated risk level if it is reduced for any items listed above that are added and concurred with by the airport and the operation representative:

☐ Low ☐ Medium ☐ High

Mitigation Concurrence: Airport Representative _____

Banner Towing Operation Representative _____

Verification Notes: _____

_____

3. Is the banner towing pick-up/drop-off area on or near an active runway?

☐ Yes = H* ☐ No = L

When marking the checklist boxes, use "C" for mitigations "Currently" in place, and "P" for "Proposed" mitigations.

☐ Relocate banner pick-up/drop-off area, if possible.

☐ Modify banner pick-up/drop-off area to establish a safe distance from runway.

☐ _____

☐ _____

* Mark the "Proposed" mitigated risk level if it is reduced for any items listed above that are added and concurred with by the airport and the operation representative:

☐ Low ☐ Medium ☐ High

Mitigation Concurrence: Airport Representative _____

Banner Towing Operation Representative _____

Verification Notes: _____

_____

4. If the banner pick-up/drop-off area is on or near an active runway, does the operator intend to leave equipment up during their operations and not have it removed by the ground crew after the banner is picked up?

☐ Yes = H* ☐ No = L

When marking the checklist boxes, use "C" for mitigations "Currently" in place, and "P" for "Proposed" mitigations.

☐ Relocate banner pick-up/drop-off area, if possible.

☐ Modify banner pick-up/drop-off area to establish a safe distance from runway.

UNCONTROLLED COPY WHEN DOWNLOADED
Check with FSIMS to verify current version before using

☐ Require operator to have the equipment moved to a safe area after each pick-up.

☐ _____

☐ _____

* Mark the "Proposed" mitigated risk level if it is reduced for any items listed above that are added and concurred with by the airport and the operation representative:

☐ Low ☐ Medium ☐ High

Mitigation Concurrence: Airport Representative _____

Banner Towing Operation Representative _____

Verification Notes: _____

_____

5. If the banner pick-up/drop-off area is on or near an active runway, does the operator intend to utilize the area for multiple banner operations in succession, thereby effectively closing the runway?

☐ Yes = H* ☐ No = L

<u>When marking the checklist boxes, use "C" for mitigations "Currently" in place, and "P" for "Proposed" mitigations.</u>

☐ Relocate banner pick-up/drop-off area, if possible.

☐ Modify banner pick-up/drop-off area to establish a safe distance from runway.

☐ _____

☐ _____

* Mark the "Proposed" mitigated risk level if it is reduced for any items listed above that are added and concurred with by the airport and the operation representative:

☐ Low ☐ Medium ☐ High

Mitigation Concurrence: Airport Representative _____

Banner Towing Operation Representative _____

Verification Notes: _____

_____

UNCONTROLLED COPY WHEN DOWNLOADED
Check with FSIMS to verify current version before using

6. Does the airport broadcast reports of banner towing operations by a control tower or on a UNICOM/CTAF (common traffic advisory frequency) by the banner towing operation? (Verify by having the radio call procedures explained or listen to the radio.)

☐ Yes = L ☐ No = M*

When marking the checklist boxes, use "C" for mitigations "Currently" in place, and "P" for "Proposed" mitigations.

☐ Use UNICOM/CTAF to inform local air traffic of banner towing operations.

☐ New or revised standard operating procedures (SOP) on radio communications.

☐ _____

☐ _____

* Mark the "Proposed" mitigated risk level if it is reduced for any items listed above that are added and concurred with by the airport and the operation representative:

☐ Low ☐ Medium

Mitigation Concurrence: Airport Representative _____

Banner Towing Operation Representative _____

Verification Notes: _____

_____

7. Does the banner towing operation have ground vehicles and/or pedestrians that routinely cross a runway or defined Runway Safety Area (RSA)? (RSA–A surface surrounding the runway that has been prepared for reducing the risk of damage to airplanes in the event of an undershoot, overshoot, accidental banner drop-off, or excursion from the runway.)

☐ Yes = H* ☐ No = L

When marking the checklist boxes, use "C" for mitigations "Currently" in place, and "P" for "Proposed" mitigations.

☐ Establish runway crossing point with positive control (radio, light signal) before crossing.

☐ Use an alternate route to avoid crossing runway.

☐ New or revised SOP for runway procedures.

☐ Post signs for crossing points with instructions and "No Visitors Beyond This Point" signs.

☐ Provide training to banner towing crewmembers on runway crossing procedures.

☐ Provide vehicle driver training for those assigned to set up or recover banners.

☐ _____

☐ _____

UNCONTROLLED COPY WHEN DOWNLOADED
Check with FSIMS to verify current version before using

* Mark the "Proposed" mitigated risk level if it is reduced for any items listed above that are added and concurred with by the airport and the operation representative:

☐ Low ☐ Medium ☐ High

Mitigation Concurrence: Airport Representative _____

Banner Towing Operation Representative _____

Verification Notes: _____

_____

8. Is ATC vectoring aircraft through the airspace above the banner towing area without advising the banner towing aircraft pilot and/or ground crewmembers?

☐ Yes = H* ☐ No = L

<u>When marking the checklist boxes, use "C" for mitigations "Currently" in place, and "P" for "Proposed" mitigations.</u>

☐ Establish with ATC a distinct transponder code for banner towing aircraft, even when they are not communicating with the banner towing aircraft.

☐ Communicate the problem to ATC handling the aircraft and the ground control handling the ground crew.

☐ Letter of Agreement between ATC and banner towing operation.

☐ _____

☐ _____

* Mark the "Proposed" mitigated risk level if it is reduced for any items listed above that are added and concurred with by the airport and the operation representative:

☐ Low ☐ Medium ☐ High

Mitigation Concurrence: Airport Representative _____

Banner Towing Operation Representative _____

Verification Notes: _____

_____

9. Is there a HAA (helicopter air ambulance) operation based at the airport?

☐ Yes= M* ☐ No = L

UNCONTROLLED COPY WHEN DOWNLOADED
Check with FSIMS to verify current version before using

When marking the checklist boxes, use "C" for mitigations "Currently" in place, and "P" for "Proposed" mitigations.

☐ Establish radio communications between HAA and banner towing operations.

☐ Incorporate a warning device within the banner towing operations when a HAA helicopter is dispatched to cease banner towing operations until the helicopter is clear.

☐ New or revised SOPs for both HAA and the banner towing operations.

☐ Safety meeting with all parties involved to establish procedures.

☐ _____

☐ _____

* Mark the "Proposed" mitigated risk level if it is reduced for any items listed above that are added and concurred with by the airport and the operation representative:

☐ Low ☐ Medium

Mitigation Concurrence: Airport Representative _____

Banner Towing Operation Representative _____

Verification Notes: _____

_____

10. Are helicopter operations routinely conducted at the airport during daylight hours? (E.g., a helicopter flight school that is based at the airport, other area helicopter flight schools that use the airport for training operations, or any other routine transient helicopter operations that are conducted at the airport.)

☐ Yes= M* ☐ No = L

When marking the checklist boxes, use "C" for mitigations "Currently" in place, and "P" for "Proposed" mitigations.

☐ Establish radio communications between helicopter and banner towing operations.

☐ New or revised SOPs for both helicopter and banner towing operations.

☐ Safety briefings with all parties to bring awareness about the banner towing operations.

☐ Banner towing operator provides helicopter operations with training material specific to that airport banner towing operations. Material presented during helicopter initial and annual training.

☐ _____

☐ _____

UNCONTROLLED COPY WHEN DOWNLOADED
Check with FSIMS to verify current version before using

* Mark the "Proposed" mitigated risk level if it is reduced for any items listed above that are added and concurred with by the airport and the operation representative:

☐ Low ☐ Medium

Mitigation Concurrence: Airport Representative _____

Banner Towing Operation Representative _____

Verification Notes: _____

_____

11. Are there "No Radio" operations (e.g., light sport, ultralight, glider, or agricultural aircraft) being conducted at the airport or through the banner pick-up/drop-off area?

☐ Yes = M* ☐ No = L

<u>When marking the checklist boxes, use "C" for mitigations "Currently" in place, and "P" for "Proposed" mitigations.</u>

☐ Request radio monitoring between these types of aircraft and the banner towing operation using a handheld radio as a minimum.

☐ Safety briefings with all parties to bring awareness about the banner towing operations.

☐ Communications letter sent to pilots, FBOs, and terminals in the local area.

☐ Post NOTAM.

☐ _____

☐ _____

* Mark the "Proposed" mitigated risk level if it is reduced for any items listed above that are added and concurred with by the airport and the operation representative:

☐ Low ☐ Medium

Mitigation Concurrence: Airport Representative _____

Banner Towing Operation Representative_____

Verification Notes: _____

_____

12. Do student pilots, either based at the airport or at airports in proximity to the airport, routinely use this airport during banner towing operations during daylight hours? (Verify.)

UNCONTROLLED COPY WHEN DOWNLOADED
Check with FSIMS to verify current version before using

If yes, how many solo student takeoffs and landings per day during daylight hours? _____

Use (L) for 25 or fewer, (M*) for 26 to 50, and (H*) for more than 50.

☐ Yes* = ___ ☐ No = L

When marking the checklist boxes, use "C" for mitigations "Currently" in place, and "P" for "Proposed" mitigations.

☐ Communication of banner towing operations over UNICOM/CTAF.

☐ Establish procedures for student solo pilots to maintain separation from banner towing operations as much as practical.

☐ New or revised SOPs for training activity.

☐ Safety briefings with all affected parties to bring awareness about the banner towing operations.

☐ Provide training to area flight school students about banner towing operations.

☐ _____

☐ _____

* Mark the "Proposed" mitigated risk level if it is reduced for any items listed above that are added and concurred with by the airport and the operation representative:

☐ Low ☐ Medium ☐ High

Mitigation Concurrence: Airport Representative _____

Banner Towing Operation Representative _____

Verification Notes: _____

_____

13. Is the banner pick-up/drop-off area in a pre-designated area with adequate clearance from the nearest aircraft run-up area, aircraft movement area, helicopter pad, or airport NAVAID? (NAVAID distance is to mitigate potential damage to, or interruption of that NAVAID.)

☐ Yes = L ☐ No* = H

When marking the checklist boxes, use "C" for mitigations "Currently" in place, and "P" for "Proposed" mitigations.

☐ Move or relocate banner pick-up/drop-off area, if possible.

☐ Modify pick-up/drop-off area to establish distance from NAVAID.

☐ _____

☐ _____

UNCONTROLLED COPY WHEN DOWNLOADED
Check with FSIMS to verify current version before using

* Mark the "Proposed" mitigated risk level if it is reduced for any items listed above that are added and concurred with by the airport and the operation representative:

☐ Low ☐ Medium ☐ High

Mitigation Concurrence: Airport Representative _____

Banner Towing Operation Representative _____

Verification Notes: _____

_____

14. In the event of an accidental banner release during the pick-up phase, will the banner towing operation be able to maintain adequate clearance from the nearest aircraft run-up area, aircraft movement area, helicopter pad or airport NAVAID? (NAVAID distance is to mitigate potential damage to, or interruption of NAVAID.)

☐ Yes = L ☐ No = H*

<u>When marking the checklist boxes, use "C" for mitigations "Currently" in place, and "P" for "Proposed" mitigations.</u>

☐ Move or relocate banner pick-up/drop-off area, if possible.

☐ Modify pick-up/drop-off area to establish distance from NAVAID.

☐ _____

☐ _____

* Mark the "Proposed" mitigated risk level if it is reduced for any items listed above that are added and concurred with by the airport and the operation representative:

☐ Low ☐ Medium ☐ High

Mitigation Concurrence: Airport Representative _____

Banner Towing Operation Representative _____

Verification Notes: _____

_____

15. Are multiple banner towing operators using the same airport?

☐ Yes = M* ☐ No = L

UNCONTROLLED COPY WHEN DOWNLOADED
Check with FSIMS to verify current version before using

When marking the checklist boxes, use "C" for mitigations "Currently" in place, and "P" for "Proposed" mitigations.

☐ New or revised SOPs to deconflict multiple operations.

☐ _____

☐ _____

* Mark the "Proposed" mitigated risk level if it is reduced for any items listed above that are added and concurred with by the airport and the operation representative:

☐ Low ☐ Medium

Mitigation Concurrence: Airport Representative _____

Banner Towing Operation Representative_____

Verification Notes: _____

_____

16. In the event the banner towing airplane needs to land with the banner attached, would it be able to avoid obstacles without endangering other aircraft in the air or persons, property, or aircraft on the surface?

☐ Yes = L ☐ No = H*

When marking the checklist boxes, use "C" for mitigations "Currently" in place, and "P" for "Proposed" mitigations.

☐ Establish communications procedures over UNICOM/CTAF when this type of event occurs.

☐ Establish procedure for going to an alternate airport or landing area, if unable to be accommodated at this airport.

☐ _____

☐ _____

* Mark the "Proposed" mitigated risk level if it is reduced for any items listed above that are added and concurred with by the airport and the operation representative:

☐ Low ☐ Medium ☐ High

Mitigation Concurrence: Airport Representative _____

Banner Towing Operation Representative _____

Verification Notes: _____

_____

UNCONTROLLED COPY WHEN DOWNLOADED
Check with FSIMS to verify current version before using

17. Are larger aircraft taxiing or running adjacent to the banner towing pick-up/drop-off area where the engine exhaust or propeller wash could create a hazard for the banner towing crew? (Verify.)

☐ Yes = H* ☐ No = L

When marking the checklist boxes, use "C" for mitigations "Currently" in place, and "P" for "Proposed" mitigations.

☐ Establish procedures to alleviate high engine thrust from being aimed at banner towing area.

☐ Brief operators of larger aircraft of their potential hazard to banner towing crew.

☐ Post signs advising pilots of possible hazard of prop or jet blast to banner towing operations area.

☐ _____

☐ _____

* Mark the "Proposed" mitigated risk level if it is reduced for any items listed above that are added and concurred with by the airport and the operation representative:

☐ Low ☐ Medium ☐ High

Mitigation Concurrence: Airport Representative _____

Banner Towing Operation Representative _____

Verification Notes: _____

_____

18. Is the banner pick-up/drop-off area and/or the equipment required for the banner towing operation within the ILS and/or the GS critical areas?

☐ Yes = H* ☐ No = L

When marking the checklist boxes, use "C" for mitigations "Currently" in place, and "P" for "Proposed" mitigations.

☐ Move or relocate banner pick-up/drop-off area, if possible.

☐ If the airport is unable to accommodate this type of operation without impacting the airport traffic flow, develop an alternative, if possible.

☐ _____

☐ _____

* Mark the "Proposed" mitigated risk level if it is reduced for any items listed above that are added and concurred with by the airport and the operation representative:

☐ Low ☐ Medium ☐ High

UNCONTROLLED COPY WHEN DOWNLOADED
Check with FSIMS to verify current version before using

Mitigation Concurrence: Airport Representative _____

Banner Towing Operation Representative _____

Verification Notes: _____

_____

19. During the banner pick-up phase of the operation, will the banner towing aircraft overfly any area where other aircraft may be holding or taxiing?

☐ Yes = H* ☐ No = L

When marking the checklist boxes, use "C" for mitigations "Currently" in place, and "P" for "Proposed" mitigations.

☐ Move banner pick-up area if space is available on the airport.

☐ If the airport is able to accommodate this type of operation without severely impacting the airport operation, develop a routing or procedure to prevent overflights of other aircraft or personnel at low altitudes.

☐ _____

☐ _____

* Mark the "Proposed" mitigated risk level if it is reduced for any items listed above that are added and concurred with by the airport and the operation representative:

☐ Low ☐ Medium ☐ High

Mitigation Concurrence: Airport Representative _____

Banner Towing Operation Representative _____

Verification Notes: _____

_____

20. Additional safety observations not covered by questions 1–19 that could create a hazard between the banner towing operation and an operating aircraft and proposed nonstandard safety mitigations must be coordinated with AFS-830. Concurrence via email must be received before it can be added to the AFS risk assessment report.

UNCONTROLLED COPY WHEN DOWNLOADED
Check with FSIMS to verify current version before using

Initial Assessment

- An initial assessment with all of the factors rated as (L) (before mitigation) = Low Risk.
- An initial assessment with any factor rated as (M) (before mitigation), but no factors rated as (H) = Medium Risk.
- An initial assessment with any factor rated as (H) (before mitigation) = High Risk.

Overall Assessment

- If all of the factors are rated as (L) (after mitigation), the overall assessment = Low Risk.
- If all of the factors are rated as (L) or (M) (after mitigation), the overall assessment = Medium Risk.
- If any factor is rated as (H) (after mitigation), the overall assessment = High Risk.

Initial Risk Classification without mitigation measures:

☐ Low ☐ Medium ☐ High

Overall Risk Classification with mitigation measures:

☐ Low ☐ Medium ☐ High

UNCONTROLLED COPY WHEN DOWNLOADED
Check with FSIMS to verify current version before using

Flight Standards Division Representative

Completed by: _____ **Date:** _____

Signature: _____ **Title:** _____

Office Telephone: _____ **Email:** _____

Airport Representative

Completed by: _____ **Date:** _____

Signature: _____ **Title:** _____

Office Telephone: _____ **Email:** _____

Banner Towing Operation Representative

Completed by: _____ **Date:** _____

Signature: _____ **Title:** _____

Office Telephone: _____ **Email:** _____

UNCONTROLLED COPY WHEN DOWNLOADED
Check with FSIMS to verify current version before using

Figure 8-3-5B. Risk Assessment for Parachuting Operations at an Airport

☐ Proposed Parachuting Operation ☐ Existing Parachuting Operation

Airport Name: _____

Airport Point of Contact: _____

Parachute Operation Name: _____

Parachute Operation Point of Contact: _____

Date of Assessment: _____

Parachute Operation Areas of Safety Considerations

Rating Scale: (L) Low, (M) Medium, or (H) High

1. (a) Does this airport have written airport procedures that include parachute operations and are they available to airport users? (Verify.)

☐ Yes = L ☐ No = M*

When marking the checklist boxes, use "C" for mitigations "Currently" in place, and "P" for "Proposed" mitigations.

☐ Create airport procedures that include the parachute operation.

☐ _____

☐ _____

* Mark the "Proposed" mitigated risk level if it is reduced for any items listed above that are added and concurred with by the airport and the operation representative:

☐ Low ☐ Medium

Mitigation Concurrence: Airport Representative _____

Parachute Operation Representative _____

Verification Notes: _____

_____

(b) Is there a procedure for notifying airport users of changes to the airport procedures? (Verify.)

☐ Yes = L ☐ No = M*

UNCONTROLLED COPY WHEN DOWNLOADED
Check with FSIMS to verify current version before using

When marking the checklist boxes, use "C" for mitigations "Currently" in place, and "P" for "Proposed" mitigations.

☐ Establish airport processes to notify airport users about airport procedures that include parachute operations.

☐ Include airport procedures in parachute operation lease agreement.

☐ Notify airport tenants about procedures and provide updates as needed.

☐ Verbal communications (telephone or in person) with tenants.

☐ Hold annual safety meeting for airport tenants and users to describe procedures, and establish a procedure for educating new airport tenants and users of these procedures.

☐ Website for the airport or city that includes the current airport procedures.

☐ _____

☐ _____

* Mark the "Proposed" mitigated risk level if it is reduced for any items listed above that are added and concurred with by the airport and the operation representative:

☐ Low ☐ Medium

Mitigation Concurrence: Airport Representative _____

Parachute Operation Representative _____

Verification Notes: _____

_____

2. (a) Does the airport have an operating airport traffic control tower (ATCT)? (Verify.)

☐ Yes = L ☐ No = Move to 2(b)

(b) If this is a non-towered airport, are the parachuting operations announced over the airport's UNICOM or CTAF (common traffic advisory frequency)? (Verify by having the radio call procedures explained or listen to the radio.)

☐ Yes = L ☐ No = H*

When marking the checklist boxes, use "C" for mitigations "Currently" in place, and "P" for "Proposed" mitigations.

☐ Use of UNICOM or CTAF to inform local air traffic of parachute operations.

☐ New or revised standard operating procedures (SOP) on radio communications.

☐ _____

☐ _____

UNCONTROLLED COPY WHEN DOWNLOADED
Check with FSIMS to verify current version before using

* Mark the "Proposed" mitigated risk level if it is reduced for any items listed above that are added and concurred with by the airport and the operation representative:

☐ Low ☐ Medium ☐ High

Mitigation Concurrence: Airport Representative _____

Parachute Operation Representative _____

Verification Notes: _____

_____

3. Do parachute operation ground vehicles and pedestrians (parachutist and/or visitors) routinely cross the runway or Runway Safety Area (RSA)? (Routine runway/taxiway crossings as it applies to this question are defined as runway/taxiway crossings that are part of the drop zone operator's SOPs for their parachute operation.) (Verify.)

☐ Yes = H* ☐ No = L

<u>When marking the checklist boxes, use "C" for mitigations "Currently" in place, and "P" for "Proposed" mitigations.</u>

☐ Establish runway crossing point with positive control (radio, light signal) before crossing.

☐ Use an alternate route to avoid crossing runway.

☐ New or revised SOP for runway procedures.

☐ Post signs for crossing points with instructions and "No Visitors Beyond This Point" signs.

☐ Provide training to parachutists on runway crossing procedures.

☐ Provide vehicle driver training for those assigned to recover parachutists.

☐ _____

☐ _____

* Mark the "Proposed" mitigated risk level if it is reduced for any items listed above that are added and concurred with by the airport and the operation representative:

☐ Low ☐ Medium ☐ High

Mitigation Concurrence: Airport Representative _____

Parachute Operation Representative _____

Verification Notes: _____

_____

UNCONTROLLED COPY WHEN DOWNLOADED
Check with FSIMS to verify current version before using

4. Is ATC (air traffic control) vectoring aircraft at or below the airspace being used by parachute operations?

☐ Yes = H* ☐ No = L

When marking the checklist boxes, use "C" for mitigations "Currently" in place, and "P" for "Proposed" mitigations.

☐ Communicate the problem to ATC handling the aircraft.

☐ Letter of Agreement between ATC and parachute operation.

☐ _____

☐ _____

* Mark the "Proposed" mitigated risk level if it is reduced for any items listed above that are added and concurred with by the airport and the operation representative:

☐ Low ☐ Medium ☐ High

Mitigation Concurrence: Airport Representative _____

Parachute Operation Representative _____

Verification Notes: _____

_____

5. Are there active military aircraft using the same airspace as parachute operations?

☐ Yes = H* ☐ No = L

When marking the checklist boxes, use "C" for mitigations "Currently" in place, and "P" for "Proposed" mitigations.

☐ Post NOTAMs for parachute operations.

☐ Communicate to military unit the nature of the parachute operations.

☐ Communicate with ATC that is controlling military aircraft that parachute operations are in progress.

☐ Safety briefing to military unit about the location and times of parachute operations.

☐ _____

☐ _____

* Mark the "Proposed" mitigated risk level if it is reduced for any items listed above that are added and concurred with by the airport and the operation representative:

☐ Low ☐ Medium ☐ High

UNCONTROLLED COPY WHEN DOWNLOADED
Check with FSIMS to verify current version before using

Mitigation Concurrence: Airport Representative _____

Parachute Operation Representative _____

Verification Notes: _____

_____

6. Is there a HAA (helicopter air ambulance) operation based at this airport?

☐ Yes= H* ☐ No = L

When marking the checklist boxes, use "C" for mitigations "Currently" in place, and "P" for "Proposed" mitigations.

☐ Establish radio communications between HAA and parachute operations.

☐ Incorporate a warning device within the parachute operations when a HAA helicopter is dispatched to cease parachute operations until the helicopter is clear.

☐ New or revised SOPs for both HAA and parachute operations.

☐ Safety meeting with all parties involved to establish procedures.

☐ _____

☐ _____

* Mark the "Proposed" mitigated risk level if it is reduced for any items listed above that are added and concurred with by the airport and the operation representative:

☐ Low ☐ Medium ☐ High

Mitigation Concurrence: Airport Representative _____

Parachute Operation Representative _____

Verification Notes: _____

_____

7. Are helicopter operations routinely conducted at the airport during daylight hours? (E.g., a helicopter flight school that is based at the airport, other area helicopter flight schools that use the airport for training operations, or any other routine transient helicopter operations that are conducted at the airport.) (Verify by information (documentation) provided by airport personnel and/or visual observations at the time of the audit.)

- In determining the number of helicopter operations, take into account that some helicopter operators, e.g., sightseeing and firefighting, launch and recover several aircraft together in a formation. Because these formations operate as a single unit, the adjusted operational number will be lower. To determine the risk level with these operations, verify the maximum number of individual helicopter operations per day during the

UNCONTROLLED COPY WHEN DOWNLOADED
Check with FSIMS to verify current version before using

busiest time of year, then divide by the number of helicopters launched and recovered in formation each time. This will give you a new, adjusted operations per day.

- Determine if any conflicting helicopter operations are determined on the wind direction for the airport. In some situations, the only time helicopter routing becomes an issue is when the wind is blowing a certain direction, which determines helicopter arrival and departure direction. This condition may not happen on a regular basis, lowering the likelihood of a conflict.

Use (L) for 25 or fewer, (M*) for 26 to 50, and (H*) for more than 50.

☐ Yes* = ___ ☐ No = L

When marking the checklist boxes, use "C" for mitigations "Currently" in place, and "P" for "Proposed" mitigations.

☐ Establish radio communications between helicopter and parachute operations.

☐ New or revised SOPs for both helicopter and parachute operations.

☐ Safety briefings with all parties to bring awareness about the parachute operations.

☐ Parachute operator provides helicopter operations with training material specific to that airport parachute operations. Material presented during helicopter initial and annual training.

☐ _____

☐ _____

* Mark the "Proposed" mitigated risk level if it is reduced for any items listed above that are added and concurred with by the airport and the operation representative:

☐ Low ☐ Medium ☐ High

Mitigation Concurrence: Airport Representative _____

Parachute Operation Representative _____

Verification Notes: _____

_____

8. Are there "No Radio" operations (e.g., light sport, ultralight, glider, or agricultural aircraft) being conducted through the airspace being used by parachute operations?

Use (L) for 25 or fewer, (M*) for 26 to 50, and (H*) for more than 50.

☐ Yes* = ___ ☐ No = L

UNCONTROLLED COPY WHEN DOWNLOADED
Check with FSIMS to verify current version before using

When marking the checklist boxes, use "C" for mitigations "Currently" in place, and "P" for "Proposed" mitigations.

☐ Request radio monitoring between these types of aircraft and the parachute operation with a handheld radio as a minimum.

☐ Conduct annual safety briefings with all parties to bring awareness about the parachute operations.

☐ Provide information to pilots, FBOs, airport tenants, and other airports in the area advising them of parachute operations.

☐ Post NOTAM.

☐ _____

☐ _____

* Mark the "Proposed" mitigated risk level if it is reduced for any items listed above that are added and concurred with by the airport and the operation representative:

☐ Low ☐ Medium ☐ High

Mitigation Concurrence: Airport Representative _____

Parachute Operation Representative _____

Verification Notes: _____

_____

9. Do student pilots, either based at the airport or at airports in proximity to the airport, routinely use this airport during parachute operations during daylight hours? If yes, how many takeoffs and landings per day during daylight hours? _____ (Verify by information (documentation) provided by airport personnel. This may include flight school records or flight tracking information.)

Use (L) for 25 or fewer, (M*) for 26 to 50, and (H*) for more than 50.

☐ Yes* = ___ ☐ No = L

When marking the checklist boxes, use "C" for mitigations "Currently" in place, and "P" for "Proposed" mitigations.

☐ Communication of parachute activity over UNICOM/CTAF.

☐ Establish procedures for student solo pilots to maintain separation from parachute operations as much as practical.

☐ New or revised SOPs for training activity.

UNCONTROLLED COPY WHEN DOWNLOADED
Check with FSIMS to verify current version before using

☐ Safety briefings with all parties to bring awareness about the parachute operations.

☐ Provide quarterly training to area flight school students about parachuting operations.

☐ _____

☐ _____

* Mark the "Proposed" mitigated risk level if it is reduced for any items listed above that are added and concurred with by the airport and the operation representative:

☐ Low ☐ Medium ☐ High

Mitigation Concurrence: Airport Representative _____

Parachute Operation Representative _____

Verification Notes: _____

_____

10. Does the center of the Parachute Drop Zone (PDZ) meet the recommended minimum safe distances from hazards and NAVAIDs for the experience level approved for this PDZ? (See Drop Zone Requirements found in the US Parachute Association (USPA) Basic Safety Requirements, and listed below in the minimum safe distances) (Hazards are defined as telephone and power lines, towers, buildings, open bodies of water, highways, automobiles, aircraft, above ground equipment, and cluster of trees covering more than 3,000 square meters.)

    The shape of the PDZ may vary as long as the distance from hazards and the 45-degree clearance plane is maintained. The PDZ should avoid including the runway and taxiway safety areas; however, these areas may be utilized if there is no other available space. (Verify.)

    Minimum safe distances:

    - Fewer than 100 jumps: 100 meters (330 ft.)
    - 100 jumps or more, but fewer than 500 jumps: 50 meters (165 ft.)
    - 500 or more jumps: 12 meters (40 ft.)
    - Tandem: 50 meters (165 ft.)

    ☐ Yes = L ☐ No = H*

<u>When marking the checklist boxes, use "C" for mitigations "Currently" in place, and "P" for "Proposed" mitigations.</u>

☐ Enlarge or relocate landing area, if possible.

☐ Use radio system to instruct parachutist during descent.

UNCONTROLLED COPY WHEN DOWNLOADED
Check with FSIMS to verify current version before using

☐ Use PA system to advise parachutist in the air of aircraft ground movement near landing area.

☐ Modify landing area to establish safe distance from NAVAIDs.

☐ _____

☐ _____

* Mark the "Proposed" mitigated risk level if it is reduced for any items listed above that are added and concurred with by the airport and the operation representative:

☐ Low ☐ Medium ☐ High

Mitigation Concurrence: Airport Representative _____

Parachute Operation Representative _____

Verification Notes: _____

_____

11. For airports with a single runway, does the location of the PDZ cause skydivers to descend through the traffic pattern at any time (e.g., based on wind direction)?

☐ Yes = M* ☐ No = L

<u>When marking the checklist boxes, use "C" for mitigations "Currently" in place, and "P" for "Proposed" mitigations.</u>

☐ Communication over UNICOM/CTAF when parachutists are away, specifying the traffic pattern affected.

☐ Move landing area if space is available on the airport.

☐ Conduct annual safety briefings with all parties to bring awareness about parachute operations.

☐ _____

☐ _____

* Mark the "Proposed" mitigated risk level if it is reduced for any items listed above that are added and concurred with by the airport and the operation representative:

☐ Low ☐ Medium

Mitigation Concurrence: Airport Representative _____

Parachute Operation Representative _____

Verification Notes: _____

_____

UNCONTROLLED COPY WHEN DOWNLOADED
Check with FSIMS to verify current version before using

12. Does the airport have multiple runways utilizing more than one traffic pattern, and does the location of the PDZ cause skydivers to descend through any of the traffic patterns? (Verify.)

☐ Yes = M* ☐ No = L

When marking the checklist boxes, use "C" for mitigations "Currently" in place, and "P" for "Proposed" mitigations.

☐ Communication over UNICOM/CTAF when parachutists are away, specifying which traffic pattern is affected.

☐ Move landing area if space is available on the airport.

☐ Establish a traffic pattern to deconflict with parachute operations as much as practical.

☐ _____

☐ _____

* Mark the "Proposed" mitigated risk level if it is reduced for any items listed above that are added and concurred with by the airport and the operation representative:

☐ Low ☐ Medium

Mitigation Concurrence: Airport Representative _____

Parachute Operation Representative _____

Verification Notes: _____

_____

13. Are NOTAMS, AWOS (Automated Weather Observing System), and/or the PDZ depicted by a parachute symbol on the appropriate Sectional Chart used to advise airport traffic of parachute operations? (Verify.)

☐ Yes = L ☐ No = M*

When marking the checklist boxes, use "C" for mitigations "Currently" in place, and "P" for "Proposed" mitigations.

☐ Post NOTAMs.

☐ Utilize AWOS, if available, to announce parachute operations.

☐ Have parachuting symbol depicted on appropriate Sectional Chart, if eligible.

☐ _____

☐ _____

UNCONTROLLED COPY WHEN DOWNLOADED
Check with FSIMS to verify current version before using

* Mark the "Proposed" mitigated risk level if it is reduced for any items listed above that are added and concurred with by the airport and the operation representative:

☐ Low ☐ Medium

Mitigation Concurrence: Airport Representative _____

Parachute Operation Representative _____

Verification Notes: _____

_____

14. Additional safety observations not covered by questions 1–13 that could create a hazard between the parachutist and an operating aircraft and proposed nonstandard safety mitigations must be coordinated with AFS-830. Concurrence via email must be received before it can be added to the AFS risk assessment report.

Initial Assessment

- An initial assessment with all of the factors rated as (L) (before mitigation) = Low Risk.
- An initial assessment with any factor rated as (M) (before mitigation), but no factors rated as (H) = Medium Risk.
- An initial assessment with any factor rated as (H) (before mitigation) = High Risk.

Overall Assessment

- If all of the factors are rated as (L) (after mitigation), the overall assessment = Low Risk.
- If all of the factors are rated as (L) or (M) (after mitigation), the overall assessment = Medium Risk.
- If any factor is rated as (H) (after mitigation), the overall assessment = High Risk.

Initial Risk Classification without mitigation measures:

☐ Low ☐ Medium ☐ High

Overall Risk Classification with mitigation measures:

☐ Low ☐ Medium ☐ High

UNCONTROLLED COPY WHEN DOWNLOADED
Check with FSIMS to verify current version before using

Flight Standards Division Representative

Completed by: _____ **Date:** _____

Signature: _____ **Title:** _____

Office Telephone: _____ **Email:** _____

Airport Representative

Completed by: _____ **Date:** _____

Signature: _____ **Title:** _____

Office Telephone: _____ **Email:** _____

Parachute Operator Representative

Completed by: _____ **Date:** _____

Signature: _____ **Title:** _____

Office Telephone: _____ **Email:** _____

UNCONTROLLED COPY WHEN DOWNLOADED
Check with FSIMS to verify current version before using

Figure 8-3-5C. Risk Assessment for Glider Operations at an Airport

☐ Proposed Glider Operation ☐ Existing Glider Operation

Airport Name _____

Airport Point of Contact _____

Glider Company Name _____

Glider Company Point of Contact _____

Date of Assessment _____

Glider Operation Areas of Safety Considerations

Rating Scale: (L) Low, (M) Medium or (H) High

Section A—General and Air Tow Operations

1. (a) Does this airport have written airport procedures that include glider operations and are they available to airport users? (Verify.)

☐ Yes = L ☐ No = M*

When marking the checklist boxes, use "C" for mitigations "Currently" in place, and "P" for "Proposed" mitigations.

☐ Create airport procedures that include glider operations.

☐ _____

☐ _____

* Mark the "Proposed" mitigated risk level if it is reduced for any items listed above that are added and concurred with by the airport and the operation representative:

☐ Low ☐ Medium

Mitigation Concurrence: Airport Representative _____

Glider Operation Representative _____

Verification Notes: _____

_____

UNCONTROLLED COPY WHEN DOWNLOADED
Check with FSIMS to verify current version before using

(b) Is there a procedure for notifying airport users of changes to the airport procedures?

☐ Yes = L ☐ No = M*

When marking the checklist boxes, use "C" for mitigations "Currently" in place, and "P" for "Proposed" mitigations.

☐ Establish airport processes to notify airport users about airport procedures that include glider operations.

☐ Determine if procedures are written into the glider operation lease agreement.

☐ Notify airport tenants about procedures and provide updates as needed.

☐ Verbal communications (telephone or in person) with tenants.

☐ Hold annual safety meeting for airport tenants and users to describe procedures, and establish a procedure for educating new airport tenants and users of these procedures.

☐ Website for the airport or city that includes the current airport procedures.

☐ _____

☐ _____

* Mark the "Proposed" mitigated risk level if it is reduced for any items listed above that are added and concurred with by the airport and the operation representative:

☐ Low ☐ Medium

Mitigation Concurrence: Airport Representative _____

Glider Operation Representative _____

Verification Notes: _____

_____

2. If this is a 14 CFR part 139 airport, what is the frequency of scheduled air carrier takeoffs and landings per day?

Use (L) for 25 or fewer, (M*) for 26 to 50, and (H*) for more than 50. (Verify.)

☐ Yes* = ___ ☐ No = L

UNCONTROLLED COPY WHEN DOWNLOADED
Check with FSIMS to verify current version before using

When marking the checklist boxes, use "C" for mitigations "Currently" in place, and "P" for "Proposed" mitigations.

☐ Restrict glider operations to times when scheduled air carriers are not expected and gliders are radio equipped.

☐ Establish procedures that keep gliders from interfering with air carrier operations (e.g., separate pattern to glider landing area, and different part of airport).

☐ _____

☐ _____

* Mark the "Proposed" mitigated risk level if it is reduced for any items listed above that are added and concurred with by the airport and the operation representative:

☐ Low ☐ Medium ☐ High

Mitigation Concurrence: Airport Representative _____

Glider Operation Representative _____

Verification Notes: _____

_____

3. Is the glider takeoff/launch and/or landing area on or near an active runway being used by other aircraft?

☐ Yes = H* ☐ No = L

When marking the checklist boxes, use "C" for mitigations "Currently" in place, and "P" for "Proposed" mitigations.

☐ Relocate takeoff/launch and/or landing area, if possible.

☐ Modify takeoff/launch and/or landing area to establish a safe distance from runway.

☐ _____

☐ _____

* Mark the "Proposed" mitigated risk level if it is reduced for any items listed above that are added and concurred with by the airport and the operation representative:

☐ Low ☐ Medium ☐ High

Mitigation Concurrence: Airport Representative _____

Glider Operation Representative _____

Verification Notes: _____

_____

UNCONTROLLED COPY WHEN DOWNLOADED
Check with FSIMS to verify current version before using

4. If the takeoff/launch and/or landing area is on or near an active runway, does the operator intend to have personnel present to assist the pilot in recovery?

☐ Yes = L ☐ No = M*

When marking the checklist boxes, use "C" for mitigations "Currently" in place, and "P" for "Proposed" mitigations.

☐ Relocate takeoff/launch and/or landing area, if possible.

☐ Modify takeoff/launch and/or landing area to establish a safe distance from runway.

☐ _____

☐ _____

* Mark the "Proposed" mitigated risk level if it is reduced for any items listed above that are added and concurred with by the airport and the operation representative:

☐ Low ☐ Medium

Mitigation Concurrence: Airport Representative _____

Glider Operation Representative _____

Verification Notes: _____

_____

5. If the area is on or near an active runway, does the operator intend to utilize the area for multiple glider operations in succession, thereby effectively closing the runway?

☐ Yes = H* ☐ No = L

When marking the checklist boxes, use "C" for mitigations "Currently" in place, and "P" for "Proposed" mitigations.

☐ Relocate glider takeoff/launch and/or landing area, if possible.

☐ Modify takeoff/launch and/or landing area to establish a safe distance from runway.

☐ Limit the number of glider launches in succession.

☐ _____

☐ _____

* Mark the "Proposed" mitigated risk level if it is reduced for any items listed above that are added and concurred with by the airport and the operation representative:

☐ Low ☐ Medium ☐ High

UNCONTROLLED COPY WHEN DOWNLOADED
Check with FSIMS to verify current version before using

Mitigation Concurrence: Airport Representative _____

Glider Operation Representative _____

Verification Notes: _____

_____

6. Does this airport have a designated and marked glider landing area or runway?

☐ Yes = L ☐ No = M*

When marking the checklist boxes, use "C" for mitigations "Currently" in place, and "P" for "Proposed" mitigations.

☐ Establish designated glider landing area or runway.

☐ Determine if procedures are written into the glider operation lease agreement.

☐ Website for the airport or city that includes the current procedures.

☐ _____

☐ _____

* Mark the "Proposed" mitigated risk level if it is reduced for any items listed above that are added and concurred with by the airport and the operation representative:

☐ Low ☐ Medium

Mitigation Concurrence: Airport Representative _____

Glider Operation Representative _____

Verification Notes: _____

_____

7. If this is a non-towered airport, is glider activity broadcasted on a UNICOM or CTAF (common traffic advisory frequency)? (Verify by having the radio call procedures explained or listen to the radio.)

☐ Yes = L ☐ No = M*

When marking the checklist boxes, use "C" for mitigations "Currently" in place, and "P" for "Proposed" mitigations.

☐ Use UNICOM or CTAF to inform local air traffic of glider operations.

☐ New or revised standard operating procedures (SOP) on radio communications.

☐ _____

☐ _____

UNCONTROLLED COPY WHEN DOWNLOADED
Check with FSIMS to verify current version before using

* Mark the "Proposed" mitigated risk level if it is reduced for any items listed above that are added and concurred with by the airport and the operation representative:

☐ Low ☐ Medium

Mitigation Concurrence: Airport Representative _____

Glider Operation Representative _____

Verification Notes: _____

_____

8. Do glider operation ground vehicles and pedestrians routinely cross a runway or defined Runway Safety Area (RSA)? (RSA–A surface surrounding the runway that has been prepared for reducing the risk of damage to airplanes in the event of an undershoot, overshoot, accidental banner drop off, or excursion from the runway.)

☐ Yes = H* ☐ No = L

<u>When marking the checklist boxes, use "C" for mitigations "Currently" in place, and "P" for "Proposed" mitigations.</u>

☐ Establish runway crossing point with positive control (radio, light signal) before crossing.

☐ Establish route to avoid crossing runway.

☐ New or revised SOP for runway procedures.

☐ Post signs for crossing points with instructions and "No Visitors Beyond This Point" signs.

☐ Provide training to glider crewmembers on runway crossing procedures.

☐ Provide vehicle driver training for those assigned to assist gliders.

☐ _____

☐ _____

* Mark the "Proposed" mitigated risk level if it is reduced for any items listed above that are added and concurred with by the airport and the operation representative:

☐ Low ☐ Medium ☐ High

Mitigation Concurrence: Airport Representative _____

Glider Operation Representative _____

Verification Notes: _____

_____

UNCONTROLLED COPY WHEN DOWNLOADED
Check with FSIMS to verify current version before using

9. Is there military aircraft activity over the glider zone within the same altitudes as glider operations?

☐ Yes = H* ☐ No = L

When marking the checklist boxes, use "C" for mitigations "Currently" in place, and "P" for "Proposed" mitigations.

☐ Communicate to military units the nature of the glider operations.

☐ Communicate with ATC that is controlling military aircraft that glider operations are in progress.

☐ Safety briefing to military units about the location and times of glider operations.

☐ _____

☐ _____

* Mark the "Proposed" mitigated risk level if it is reduced for any items listed above that are added and concurred with by the airport and the operation representative:

☐ Low ☐ Medium ☐ High

Mitigation Concurrence: Airport Representative _____

Glider Operation Representative _____

Verification Notes: _____

_____

10. Is there a HAA (helicopter air ambulance) operation based at the airport?

☐ Yes= M* ☐ No = L

When marking the checklist boxes, use "C" for mitigations "Currently" in place, and "P" for "Proposed" mitigations.

☐ Establish radio communications between HAA and glider operations.

☐ Incorporate a warning device within the glider operations when a HAA helicopter is dispatched to cease glider operations until the helicopter is clear.

☐ New or revised SOPs for both HAA and glider operations.

☐ Safety meeting with all parties involved to establish procedures.

☐ _____

☐ _____

UNCONTROLLED COPY WHEN DOWNLOADED
Check with FSIMS to verify current version before using

* Mark the "Proposed" mitigated risk level if it is reduced for any items listed above that are added and concurred with by the airport and the operation representative:

☐ Low ☐ Medium

Mitigation Concurrence: Airport Representative _____

Glider Operation Representative _____

Verification Notes: _____

_____

11. Are helicopter operations routinely conducted at the airport during daylight hours? (E.g., a helicopter flight school that is based at the airport, other area helicopter flight schools that use the airport for training operations, or any other routine transient helicopter operations that are conducted at the airport.)

☐ Yes= M* ☐ No = L

<u>When marking the checklist boxes, use "C" for mitigations "Currently" in place, and "P" for "Proposed" mitigations.</u>

☐ Establish radio communications between helicopter and glider operations.

☐ New or revised SOPs for both helicopter and glider operations.

☐ Safety briefings with all parties to bring awareness about the glider operations.

☐ Glider operator provides helicopter operations with training material specific to that airport's glider operations. Material presented during helicopter initial and annual training.

☐ _____

☐ _____

* Mark the "Proposed" mitigated risk level if it is reduced for any items listed above that are added and concurred with by the airport and the operation representative:

☐ Low ☐ Medium

Mitigation Concurrence: Airport Representative _____

Glider Operation Representative _____

Verification Notes: _____

_____

12. Are there "No Radio" operations (e.g., light sport, ultralight, or agricultural aircraft) being conducted at the airport or through the glider area?

☐ Yes = M* ☐ No = L

UNCONTROLLED COPY WHEN DOWNLOADED
Check with FSIMS to verify current version before using

When marking the checklist boxes, use "C" for mitigations "Currently" in place, and "P" for "Proposed" mitigations.

☐ Request radio monitoring between these types of aircraft and the glider operation with a handheld radio as a minimum.

☐ Establish procedures between these types of aircraft and the glider operation.

☐ Safety briefings with all parties to bring awareness about the glider operation.

☐ Communication letter sent to pilots, FBOs, and terminals in the local area.

☐ Post NOTAM.

☐ _____

☐ _____

* Mark the "Proposed" mitigated risk level if it is reduced for any items listed above that are added and concurred with by the airport and the operation representative:

☐ Low ☐ Medium

Mitigation Concurrence: Airport Representative _____

Glider Operation Representative _____

Verification Notes: _____

_____

13. Do student pilots (other than student glider pilots), based at the airport or at airports in proximity to the airport, routinely use this airport during glider operations during daylight hours?

If yes, how many solo student takeoffs and landings per day during daylight hours?

Use (L) for 25 or fewer, (M*) for 26 to 50, and (H*) for more than 50. (Verify.)

☐ Yes* = ____ ☐ No = L

When marking the checklist boxes, use "C" for mitigations "Currently" in place, and "P" for "Proposed" mitigations.

☐ Communication of glider activity over UNICOM or CTAF.

☐ Establish procedures for student pilots to maintain safe separation from glider operations.

☐ New or revised SOPs for training activity.

☐ Safety briefings with all parties to bring awareness about the glider operations.

☐ Provide training to area flight school students about glider operations.

☐ _____

☐ _____

UNCONTROLLED COPY WHEN DOWNLOADED
Check with FSIMS to verify current version before using

* Mark the "Proposed" mitigated risk level if it is reduced for any items listed above that are added and concurred with by the airport and the operation representative:

☐ Low ☐ Medium ☐ High

Mitigation Concurrence: Airport Representative _____

Glider Operation Representative _____

Verification Notes: _____

_____

14. In the event of an accidental release during takeoff/launch, will the glider be able to maintain at least a 500 ft. separation from the nearest aircraft run-up area, aircraft movement area, helicopter pad, or airport NAVAID?

☐ Yes = L ☐ No = H*

<u>When marking the checklist boxes, use "C" for mitigations "Currently" in place, and "P" for "Proposed" mitigations.</u>

☐ Move or relocate glider takeoff/launch area, if possible.

☐ Modify glider takeoff/launch procedure to establish distance from other aircraft, obstacles, or NAVAIDs.

☐ _____

☐ _____

* Mark the "Proposed" mitigated risk level if it is reduced for any items listed above that are added and concurred with by the airport and the operation representative:

☐ Low ☐ Medium ☐ High

Mitigation Concurrence: Airport Representative _____

Glider Operation Representative _____

Verification Notes: _____

_____

15. Are multiple glider operators using the same airport?

☐ Yes = M* ☐ No = L

UNCONTROLLED COPY WHEN DOWNLOADED
Check with FSIMS to verify current version before using

When marking the checklist boxes, use "C" for mitigations "Currently" in place, and "P" for "Proposed" mitigations.

☐ New or revised SOPs to deconflict multiple operators.

☐ _____

☐ _____

* Mark the "Proposed" mitigated risk level if it is reduced for any items listed above that are added and concurred with by the airport and the operation representative:

☐ Low ☐ Medium

Mitigation Concurrence: Airport Representative _____

Glider Operation Representative _____

Verification Notes: _____

_____

16. Does the airport have multiple runways utilizing more than one traffic pattern?

☐ Yes = M* ☐ No = L

When marking the checklist boxes, use "C" for mitigations "Currently" in place, and "P" for "Proposed" mitigations.

☐ Communication over UNICOM/CTAF during glider operations specifying which traffic pattern is affected.

☐ Move glider area if space is available on the airport.

☐ Establish a traffic pattern to deconflict with glider operations as much as practical.

☐ _____

☐ _____

* Mark the "Proposed" mitigated risk level if it is reduced for any items listed above that are added and concurred with by the airport and the operation representative:

☐ Low ☐ Medium

Mitigation Concurrence: Airport Representative _____

Glider Operation Representative _____

Verification Notes: _____

_____

UNCONTROLLED COPY WHEN DOWNLOADED
Check with FSIMS to verify current version before using

17. Are NOTAMs, AWOS (Automated Weather Observing System), and/or the glider area depicted by a glider symbol on the appropriate airport diagram used to advise airport traffic of glider operations? (Verify.)

☐ Yes = M ☐ No = H*

When marking the checklist boxes, use "C" for mitigations "Currently" in place, and "P" for "Proposed" mitigations.

☐ Post NOTAMs.

☐ Utilize AWOS, if available, to announce glider operations.

☐ Have glider symbol depicted on appropriate airport diagram, if eligible.

☐ _____

☐ _____

* Mark the "Proposed" mitigated risk level if it is reduced for any items listed above that are added and concurred with by the airport and the operation representative:

☐ Low ☐ Medium ☐ High

Mitigation Concurrence: Airport Representative _____

Glider Operation Representative _____

Verification Notes: _____

_____

18. Are larger aircraft taxiing or running adjacent to the glider operations area where the engine exhaust or propeller wash could create a hazard for the glider or crew? (Verify.)

☐ Yes = H* ☐ No = L

When marking the checklist boxes, use "C" for mitigations "Currently" in place, and "P" for "Proposed" mitigations.

☐ Establish procedures to alleviate high engine thrust from being aimed at glider area.

☐ Brief operators of larger aircraft of their potential hazard to gliders and crews.

☐ Post signs advising pilots of possible hazard of prop or jet blast to gliders and crews.

☐ _____

☐ _____

* Mark the "Proposed" mitigated risk level if it is reduced for any items listed above that are added and concurred with by the airport and the operation representative:

☐ Low ☐ Medium ☐ High

UNCONTROLLED COPY WHEN DOWNLOADED
Check with FSIMS to verify current version before using

Mitigation Concurrence: Airport Representative _____

Glider Operation Representative _____

Verification Notes: _____

_____

19. Is the glider operation area and/or the equipment required for the glider operation within the ILS and/or the GS critical areas?

☐ Yes = H* ☐ No = L

When marking the checklist boxes, use "C" for mitigations "Currently" in place, and "P" for "Proposed" mitigations.

☐ Move glider operation area if space is available on the airport.

☐ _____

☐ _____

* Mark the "Proposed" mitigated risk level if it is reduced for any items listed above that are added and concurred with by the airport and the operation representative:

☐ Low ☐ Medium ☐ High

Mitigation Concurrence: Airport Representative _____

Glider Operation Representative _____

Verification Notes: _____

_____

20. During the glider takeoff/launch, will the glider fly across any area where other aircraft may be taxiing or holding?

☐ Yes = H* ☐ No = L

When marking the checklist boxes, use "C" for mitigations "Currently" in place, and "P" for "Proposed" mitigations.

☐ Move glider operation area if space is available on the airport.

☐ _____

☐ _____

* Mark the "Proposed" mitigated risk level if it is reduced for any items listed above that are added and concurred with by the airport and the operation representative:

☐ Low ☐ Medium ☐ High

UNCONTROLLED COPY WHEN DOWNLOADED
Check with FSIMS to verify current version before using

Mitigation Concurrence: Airport Representative _____

Glider Operation Representative _____

Verification Notes: _____

_____

21. Additional safety observations not covered by questions 1–20 that could create a hazard between the glider operation and an operating aircraft and proposed nonstandard safety mitigations must be coordinated with AFS-830. Concurrence via email must be received before it can be added to the AFS risk assessment report.

Section B—Ground Launching

1. Is there a designated area for launching gliders with a vehicle, winch, or combination?

☐ Yes = L ☐ No = H*

When marking the checklist boxes, use "C" for mitigations "Currently" in place, and "P" for "Proposed" mitigations.

☐ Establish area for ground launches clear of other traffic.

☐ New or revised SOP for vehicle launch procedures, if used.

☐ Post warning signs for winch or vehicle launch area.

☐ Provide training to glider crewmembers on safety procedures.

☐ Provide vehicle driver training for those assigned to assist gliders.

☐ _____

☐ _____

* Mark the "Proposed" mitigated risk level if it is reduced for any items listed above that are added and concurred with by the airport and the operation representative:

☐ Low ☐ Medium ☐ High

Mitigation Concurrence: Airport Representative _____

Glider Operation Representative _____

Verification Notes: _____

_____

22. Do glider pilots intend to circle over the airport to gain altitude after release from tow line?

☐ Yes = H* ☐ No = L

UNCONTROLLED COPY WHEN DOWNLOADED
Check with FSIMS to verify current version before using

When marking the checklist boxes, use "C" for mitigations "Currently" in place, and "P" for "Proposed" mitigations.

☐ Establish a procedure to clear the airport area immediately after release to an area away from the traffic pattern.

☐ Establish a procedure to land the glider as soon as possible if glider is unable to attain enough altitude during launch to clear the airport boundary to the nonpattern side.

☐ _____

☐ _____

* Mark the "Proposed" mitigated risk level if it is reduced for any items listed above that are added and concurred with by the airport and the operation representative:

☐ Low ☐ Medium ☐ High

Mitigation Concurrence: Airport Representative _____

Glider Operation Representative _____

Verification Notes: _____

_____

23. Does the launch cable have an attached parachute to keep the cable aloft during recovery?

☐ Yes = H* ☐ No = M*

When marking the checklist boxes, use "C" for mitigations "Currently" in place, and "P" for "Proposed" mitigations.

☐ The cable is marked every 50 ft with colored pennants or streamers.

☐ Close the airport until the cable is recovered.

☐ _____

☐ _____

* Mark the "Proposed" mitigated risk level if it is reduced for any items listed above that are added and concurred with by the airport and the operation representative:

☐ Medium ☐ High

Mitigation Concurrence: Airport Representative _____

Glider Operation Representative _____

Verification Notes: _____

_____

UNCONTROLLED COPY WHEN DOWNLOADED
Check with FSIMS to verify current version before using

24. Does the operator have written emergency procedures in the event the vehicle or winch becomes inoperative with the cable extended?

☐ Yes = L ☐ No = H*

When marking the checklist boxes, use "C" for mitigations "Currently" in place, and "P" for "Proposed" mitigations.

☐ Establish emergency procedures in the event the vehicle or winch becomes inoperative with the cable extended.

☐ Close the airport until the cable is recovered.

☐ _____

☐ _____

* Mark the "Proposed" mitigated risk level if it is reduced for any items listed above that are added and concurred with by the airport and the operation representative:

☐ Low ☐ Medium ☐ High

Mitigation Concurrence: Airport Representative _____

Glider Operation Representative _____

Verification Notes: _____

_____

25. If a tow vehicle is used, is the launch run in a straight line without turns?

☐ Yes = L ☐ No = H*

When marking the checklist boxes, use "C" for mitigations "Currently" in place, and "P" for "Proposed" mitigations.

☐ Establish procedures for launch that is only in one direction without turns.

☐ _____

☐ _____

* Mark the "Proposed" mitigated risk level if it is reduced for any items listed above that are added and concurred with by the airport and the operation representative:

☐ Low ☐ Medium ☐ High

UNCONTROLLED COPY WHEN DOWNLOADED
Check with FSIMS to verify current version before using

Mitigation Concurrence: Airport Representative _____

Glider Operation Representative _____

Verification Notes: _____

_____

26. Additional safety observations not covered by questions 1–25 that could create a hazard between the glider operation and an operating aircraft and proposed nonstandard safety mitigations must be coordinated with AFS-830. Concurrence via email must be received before it can be added to the AFS risk assessment report.

Initial Assessment

- An initial assessment with all of the factors rated as (L) (before mitigation) = Low Risk.
- An initial assessment with any factor rated as (M) (before mitigation), but no factors rated as (H) = Medium Risk.
- An initial assessment with any factor rated as (H) (before mitigation) = High Risk.

Overall Assessment

- If all of the factors are rated as (L) (after mitigation), the overall assessment = Low Risk.
- If all factors are rated as (L) or (M) (after mitigation), the overall assessment = Medium Risk.
- If any factor is rated as (H) (after mitigation), the overall assessment = High Risk.

Initial Risk Classification without mitigation measures:

☐ Low ☐ Medium ☐ High

Overall Risk Classification with mitigation measures:

☐ Low ☐ Medium ☐ High

UNCONTROLLED COPY WHEN DOWNLOADED
Check with FSIMS to verify current version before using

Flight Standards Division Representative

Completed by: _____ **Date:** _____

Signature: _____ **Title:** _____

Office Telephone: _____ **Email:** _____

Airport Representative

Completed by: _____ **Date:** _____

Signature: _____ **Title:** _____

Office Telephone: _____ **Email:** _____

Glider Operator Representative

Completed by: _____ **Date:** _____

Signature: _____ **Title:** _____

Office Telephone: _____ **Email:** _____

UNCONTROLLED COPY WHEN DOWNLOADED
Check with FSIMS to verify current version before using

Figure 8-3-5D. Risk Assessment for Powered Parachutes, Ultralight Vehicles, or Similar Performing Aircraft at an Airport

☐ Proposed PPC Operation ☐ Existing PPC Operation

Airport Name _____

Airport Point of Contact _____

PPC Owner/Company Name _____

PPC Owner/Company Point of Contact _____

Date of Assessment _____

PPC Operation Areas of Safety Considerations

Rating Scale: (L) Low, (M) Medium, or (H) High

1. (a) Does this airport have written airport procedures that include PPC operations and are they available to airport users? (Verify.)

☐ Yes = L ☐ No = M*

When marking the checklist boxes, use "C" for mitigations "Currently" in place, and "P" for "Proposed" mitigations.

☐ Create airport procedures that include PPC operations.

☐ _____

☐ _____

* Mark the "Proposed" mitigated risk level if it is reduced for any items listed above that are added and concurred with by the airport and the operation representative:

☐ Low ☐ Medium

Mitigation Concurrence: Airport Representative _____

PPC Operation Representative _____

Verification Notes: _____

_____

(b) Is there a procedure for notifying airport users of changes to the airport procedures?

☐ Yes = L ☐ No = M*

UNCONTROLLED COPY WHEN DOWNLOADED
Check with FSIMS to verify current version before using

When marking the checklist boxes, use "C" for mitigations "Currently" in place, and "P" for "Proposed" mitigations.

☐ Establish airport processes to notify airport users about airport procedures that include PPC operations.

☐ Determine if procedures are written into a lease agreement.

☐ Notify airport tenants about procedures and provide updates as needed.

☐ Verbal communications (telephone or in person) with tenants.

☐ Hold annual safety meeting for airport tenants and users to describe procedures, and establish a procedure for educating new airport tenants and users of these procedures.

☐ Website for the airport or city that includes the current airport procedures.

☐ _____

☐ _____

* Mark the "Proposed" mitigated risk level if it is reduced for any items listed above that are added and concurred with by the airport and the operation representative:

☐ Low ☐ Medium

Mitigation Concurrence: Airport Representative _____

PPC Operation Representative _____

Verification Notes: _____

_____

2. Is this a 14 CFR part 139 airport? If yes, what is the frequency of scheduled air carrier takeoffs and landings per day during daylight hours? (Verify.)

Use (L) for 25 or fewer, (M*) for 26 to 50, and (H*) for more than 50.

☐ Yes* = ___ ☐ No = L

When marking the checklist boxes, use "C" for mitigations "Currently" in place, and "P" for "Proposed" mitigations.

☐ Restrict PPC operations to times when scheduled air carriers are not expected or PPCs are radio equipped.

☐ Establish procedures that keep PPCs from interfering with air carrier operations (e.g., separate pattern and/or landing area, and different part of airport).

☐ _____

☐ _____

UNCONTROLLED COPY WHEN DOWNLOADED
Check with FSIMS to verify current version before using

* Mark the "Proposed" mitigated risk level if it is reduced for any items listed above that are added and concurred with by the airport and the operation representative:

☐ Low ☐ Medium ☐ High

Mitigation Concurrence: Airport Representative _____

PPC Operation Representative _____

Verification Notes: _____

_____

3. Is the PPC takeoff and/or landing area on or near an active runway being used by other aircraft?

☐ Yes = H* ☐ No = L

<u>When marking the checklist boxes, use "C" for mitigations "Currently" in place, and "P" for "Proposed" mitigations.</u>

☐ Relocate takeoff and/or landing area, if possible.

☐ Modify takeoff and/or landing area to establish a safe distance from runway.

☐ _____

☐ _____

* Mark the "Proposed" mitigated risk level if it is reduced for any items listed above that are added and concurred with by the airport and the operation representative:

☐ Low ☐ Medium ☐ High

Mitigation Concurrence: Airport Representative _____

PPC Operation Representative _____

Verification Notes: _____

_____

4. Does this airport have a designated and marked PPC landing area or sod runway?

☐ Yes = L ☐ No = M*

<u>When marking the checklist boxes, use "C" for mitigations "Currently" in place, and "P" for "Proposed" mitigations.</u>

☐ Develop procedure for PPCs to use the adjacent sod or grass for setup and inflation and the runway or adjacent sod or grass for takeoff.

☐ Establish designated PPC sod landing area, if possible.

UNCONTROLLED COPY WHEN DOWNLOADED
Check with FSIMS to verify current version before using

☐ Determine if procedures are written into the airport operations manual.

☐ Website for the airport or city that includes the current procedures.

☐ _____

☐ _____

* Mark the "Proposed" mitigated risk level if it is reduced for any items listed above that are added and concurred with by the airport and the operation representative:

☐ Low ☐ Medium

Mitigation Concurrence: Airport Representative _____

PPC Operation Representative _____

Verification Notes: _____

_____

5. If this is a non-towered airport, is PPC activity broadcasted on a UNICOM or CTAF (common traffic advisory frequency)? (Verify by having the radio call procedures explained or listen to the radio.)

☐ Yes = L ☐ No = M*

<u>When marking the checklist boxes, use "C" for mitigations "Currently" in place, and "P" for "Proposed" mitigations.</u>

☐ Use UNICOM or CTAF to inform local air traffic of PPC operations.

☐ New or revised standard operating procedures (SOP) on radio communications.

☐ _____

☐ _____

* Mark the "Proposed" mitigated risk level if it is reduced for any items listed above that are added and concurred with by the airport and the operation representative:

☐ Low ☐ Medium

Mitigation Concurrence: Airport Representative _____

PPC Operation Representative _____

Verification Notes: _____

_____

UNCONTROLLED COPY WHEN DOWNLOADED
Check with FSIMS to verify current version before using

6. Do the PPC operation ground vehicles or pedestrians routinely cross a runway or defined Runway Safety Area (RSA)? (RSA–A surface surrounding the runway that has been prepared for reducing the risk of damage to airplanes in the event of an undershoot, overshoot, accidental banner drop off, or excursion from the runway.)

☐ Yes = H* ☐ No = L

When marking the checklist boxes, use "C" for mitigations "Currently" in place, and "P" for "Proposed" mitigations.

☐ Establish runway crossing point with positive control (radio, light signal) before crossing.

☐ Establish route to avoid crossing runway.

☐ New or revised SOP for runway procedures.

☐ Post signs for crossing points with instructions and "No Visitors Beyond This Point" signs.

☐ Provide training to PPC crewmembers on runway crossing procedures.

☐ Provide vehicle driver training for those assigned to assist PPCs.

☐ _____

☐ _____

* Mark the "Proposed" mitigated risk level if it is reduced for any items listed above that are added and concurred with by the airport and the operation representative:

☐ Low ☐ Medium ☐ High

Mitigation Concurrence: Airport Representative _____

PPC Operation Representative _____

Verification Notes: _____

_____

7. Are helicopter operations routinely conducted at the airport during daylight hours? (E.g., a helicopter flight school that is based at the airport, other area helicopter flight schools that use the airport for training operations, or any other routine transient helicopter operations that are conducted at the airport.)

☐ Yes= M* ☐ No = L

UNCONTROLLED COPY WHEN DOWNLOADED
Check with FSIMS to verify current version before using

When marking the checklist boxes, use "C" for mitigations "Currently" in place, and "P" for "Proposed" mitigations.

☐ New or revised SOPs for both helicopter and PPC operations.

☐ Initiate safety briefings with all parties to bring awareness about the PPC operations.

☐ Establish radio communications between helicopter and PPC operations.

☐ _____

☐ _____

* Mark the "Proposed" mitigated risk level if it is reduced for any items listed above that are added and concurred with by the airport and the operation representative:

☐ Low ☐ Medium

Mitigation Concurrence: Airport Representative _____

PPC Operation Representative _____

Verification Notes: _____

_____

8. Are there "No Radio" operations (e.g., light sport, ultralight, glider, or agricultural aircraft) being conducted at the airport?

☐ Yes = M* ☐ No = L

When marking the checklist boxes, use "C" for mitigations "Currently" in place, and "P" for "Proposed" mitigations.

☐ Request radio monitoring between these types of aircraft and the PPC operation with a handheld radio as a minimum.

☐ Safety briefings with all parties to bring awareness about the PPC operations.

☐ Communications letter sent to pilots, FBOs, and terminals in the local area.

☐ Post NOTAM.

☐ _____

☐ _____

* Mark the "Proposed" mitigated risk level if it is reduced for any items listed above that are added and concurred with by the airport and the operation representative:

☐ Low ☐ Medium

UNCONTROLLED COPY WHEN DOWNLOADED
Check with FSIMS to verify current version before using

Mitigation Concurrence: Airport Representative _____

PPC Operation Representative _____

Verification Notes: _____

_____

9. Do student pilots (other than student PPC pilots), either based at the airport or at airports in proximity to the airport, routinely use this airport during PPC operations during daylight hours?

   If yes, how many solo student takeoffs and landings per day during daylight hours? _____

   Use (L) for 25 or fewer, (M*) for 26 to 50, and (H*) for more than 50. (Verify.)

   ☐ Yes* = ____ ☐ No = L

When marking the checklist boxes, use "C" for mitigations "Currently" in place, and "P" for "Proposed" mitigations.

☐ Communication of PPC activity over UNICOM or CTAF.

☐ Establish procedures for student pilots to maintain safe separation from PPC operations.

☐ New or revised SOPs for training activity.

☐ Safety briefings with all parties to bring awareness about the PPC operations.

☐ Provide training to area flight school students about PPC operations.

☐ _____

☐ _____

* Mark the "Proposed" mitigated risk level if it is reduced for any items listed above that are added and concurred with by the airport and the operation representative:

☐ Low ☐ Medium ☐ High

Mitigation Concurrence: Airport Representative _____

PPC Operation Representative _____

Verification Notes: _____

_____

10. Does the airport have multiple runways utilizing more than one traffic pattern?

☐ Yes = M* ☐ No = L

UNCONTROLLED COPY WHEN DOWNLOADED
Check with FSIMS to verify current version before using

When marking the checklist boxes, use "C" for mitigations "Currently" in place, and "P" for "Proposed" mitigations.

☐ Communication over UNICOM/CTAF during PPC operations specifying which traffic pattern is affected.

☐ Move PPC area if space is available on the airport if affected by one of the traffic patterns.

☐ Establish a traffic pattern to deconflict with PPC operations as much as practical.

☐ _____

☐ _____

* Mark the "Proposed" mitigated risk level if it is reduced for any items listed above that are added and concurred with by the airport and the operation representative:

☐ Low ☐ Medium

Mitigation Concurrence: Airport Representative _____

PPC Operation Representative _____

Verification Notes: _____

_____

11. Are NOTAMs and/or AWOS (Automated Weather Observing System) used to advise airport traffic of PPC operations? (Verify.)

☐ Yes = L ☐ No = M*

When marking the checklist boxes, use "C" for mitigations "Currently" in place, and "P" for "Proposed" mitigations.

☐ Post NOTAMs.

☐ Utilize AWOS, if available, to announce PPC operations.

☐ Have PPC symbol depicted on appropriate airport diagram, if eligible.

☐ _____

☐ _____

* Mark the "Proposed" mitigated risk level if it is reduced for any items listed above that are added and concurred with by the airport and the operation representative:

☐ Low ☐ Medium

Mitigation Concurrence: Airport Representative _____

PPC Operation Representative _____

UNCONTROLLED COPY WHEN DOWNLOADED
Check with FSIMS to verify current version before using

Verification Notes: _____

_____

12. Are larger aircraft taxiing or running adjacent to the PPC operations area, where the engine exhaust or propeller wash could create a hazard for the PPC or crew? (Verify.)

☐ Yes = H* ☐ No = L

When marking the checklist boxes, use "C" for mitigations "Currently" in place, and "P" for "Proposed" mitigations.

☐ Establish procedures to alleviate high engine thrust from being aimed at PPC area.

☐ Brief operators of larger aircraft of their potential hazard to PPCs and crews.

☐ Post signs advising pilots of possible hazard of prop or jet blast to PPCs and crews.

☐ _____

☐ _____

* Mark the "Proposed" mitigated risk level if it is reduced for any items listed above that are added and concurred with by the airport and the operation representative:

☐ Low ☐ Medium ☐ High

Mitigation Concurrence: Airport Representative _____

PPC Operation Representative _____

Verification Notes: _____

_____

13. During PPC operations, will the PPC fly across any area where other aircraft may be taxiing or holding?

☐ Yes = H* ☐ No = L

When marking the checklist boxes, use "C" for mitigations "Currently" in place, and "P" for "Proposed" mitigations.

☐ Move PPC operation area if space is available on the airport.

☐ Establish PPC approach and departure routes that avoid these areas.

☐ _____

☐ _____

UNCONTROLLED COPY WHEN DOWNLOADED
Check with FSIMS to verify current version before using

* Mark the "Proposed" mitigated risk level if it is reduced for any items listed above that are added and concurred with by the airport and the operation representative:

☐ Low ☐ Medium ☐ High

Mitigation Concurrence: Airport Representative _____

PPC Operation Representative _____

Verification Notes: _____

_____

14. Additional safety observations not covered by questions 1–13 that could create a hazard between the PPC and an operating aircraft and proposed nonstandard safety mitigations must be coordinated with AFS-830. Concurrence via email must be received before it can be added to the AFS risk assessment report.

Initial Assessment

- An initial assessment with all of the factors rated as (L) (before mitigation) = Low Risk.
- An initial assessment with any factor rated as (M) (before mitigation), but no factors rated as (H) = Medium Risk.
- An initial assessment with any factor rated as (H) (before mitigation) = High Risk.

Overall Assessment

- If all of the factors are rated as (L) (after mitigation), the overall assessment = Low Risk.
- If all of the factors are rated as (L) or (M) (after mitigation), the overall assessment = Medium Risk.
- If any factor is rated as (H) (after mitigation), the overall assessment = High Risk.

Initial Risk Classification without mitigation measures:

☐ Low ☐ Medium ☐ High

Overall Risk Classification with mitigation measures:

☐ Low ☐ Medium ☐ High

UNCONTROLLED COPY WHEN DOWNLOADED
Check with FSIMS to verify current version before using

Flight Standards Division Representative

Completed by: _____ **Date:** _____

Signature: _____ **Title:** _____

Office Telephone: _____ **Email:** _____

Airport Sponsor Representative

Completed by: _____ **Date:** _____

Signature: _____ **Title:** _____

Office Telephone: _____ **Email:** _____

PPC Owner/Operator Representative

Completed by: _____ **Date:** _____

Signature: _____ **Title:** _____

Office Telephone: _____ **Email:** _____

UNCONTROLLED COPY WHEN DOWNLOADED
Check with FSIMS to verify current version before using

Figure 8-3-5E. Flight Standards Risk Assessment Memo (Sample Memo AFS Prepares for Airports)

Federal Aviation

ADMINISTRATION

MEMORANDUM

Date:	[add date]
To:	Mr. [add name], Manager Airport Compliance Office
From:	Mr. [add FSDO Manager], Manager [add FSDO Name]
Prepared by:	[add ASI name and office],
Subject:	[add airport name and location] Municipal Airport [add activity] Risk Assessment

---

As requested by the FAA Office of Airports Division (ACO-100) [add POC name] and the General Aviation and Commercial Division (AFS-800), in coordination with the [add region] Regional Aviation Events Specialist, [add name], and the [add name] Flight Standards District Office, the following ASI, [add name], and members of the [add LOB and name] team conducted an FAA risk assessment for [add aeronautical activity] at [add location], on [add date]. The assessment was conducted with [add airport] Airport Manager, [add name], and [add operator and name of representative].

An FAA risk assessment checklist for [add aeronautical activity] was completed during the assessment to identify the current level of risk and identify possible mitigations to lower the level of risk. The attached risk assessment checklist establishes that the overall current level of risk to be [add risk value–high, medium, low]. The risk assessment checklist also establishes if the mitigations that both the airport sponsor and the [add aeronautical activity] operator concurred with are implemented, the overall level of risk will be reduced to [add risk value–high, medium, low].

[Long term plan–add if applicable] A plan will be developed to implement the following recommendations by [add date]. The plan will be/has been submitted to the FAA [add Airports POC] by [add date no later than 45 days from date of risk assessment] or [attach plan].

cc: FSDO, responsible Flight Standards office, ADO/ARO [any other participating LOBs]

UNCONTROLLED COPY WHEN DOWNLOADED
Check with FSIMS to verify current version before using

Figure 8-3-5F. Airports Risk Assessment Letter (Sample Letter Airports Prepares for Airport Sponsor and Operator)

U.S. Department of
Transportation

Federal Aviation
Administration

Dear Airport Sponsor:

This letter provides the results of the FAA risk assessment for [add aeronautical activity] aeronautical activity. On [insert date], FAA officials from the offices of Flight Standards and Airports conducted an inspection at the [add airport] Municipal Airport to evaluate the feasibility of integrating [add aeronautical activity] aeronautical activities into the airport operations. You were part of the inspection, along with [insert name of operator].

As part of the inspection, we toured the airfield and carefully examined [add specifics] to determine whether or not they are within an acceptable level of risk to safely conduct [add aeronautical activity].

During the inspection, a checklist, FAA Risk Assessment for [add aeronautical activity] Aeronautical Activity, was used to identify categories and levels of risk in order to determine if [add aeronautical activity] is possible with an acceptable level of risk, along with other airport operations, since all aeronautical activities involve some level of risk.

[Add number of risk factors from checklist] risk factors in the checklist were examined to arrive at an overall risk value. Each risk factor was rated on a three-point scale representing low, medium, or high risk. [Add number] risk factors were judged to be low risk. The remaining [add number] risk factors exceeded the desirable low-risk level. As a result, they were subjected to further analysis to determine if the apparent risk level could be reduced by applying suitable mitigation measures.

The current overall risk value for conducting [add aeronautical activity] operations at this airport without applying any additional risk mitigation is: [insert risk value–low, medium, high].

The following describes the risk areas subjected to additional analysis and the mitigation measures adopted to reduce a higher risk level to an acceptable lower risk level.

UNCONTROLLED COPY WHEN DOWNLOADED
Check with FSIMS to verify current version before using

1. The Airport does not have written airport procedures that include parachute operations and that are available to airport users. The absence of parachuting operating procedures produced a risk rating of "medium."

To mitigate the risk level to "low," the following mitigation measure was prescribed:

- Create airport procedures that include parachuting operations.

2. The Airport has a helicopter air ambulance (HAA) operation based there. The absence of parachuting operating procedures produced a risk rating of "high."

To mitigate the risk level to "low," the following mitigation measures were prescribed:

- Establish radio communications between HAA and the parachute operations.
- Incorporate a warning device within the parachute operation when a HAA helicopter is dispatched to cease parachute operations until the helicopter is clear.
- Create new or revised standard operating procedures (SOP) for both HAA and parachute operations.
- Conduct safety meetings with all parties involved to establish procedures.

3. The Airport has student pilots routinely using the airport during daylight hours, resulting in transient operations that can exceed 100 per day. The high number of aircraft operations produced a risk rating of "high."

To mitigate the risk level to "medium" or even lower, the following mitigation measures were prescribed.

- Establish radio communications of parachuting activities over the UNICOM/CTAF.
- Establish procedures so solo student pilots maintain separation from parachute operations, as much as possible.
- Create new or revised SOPs for training stakeholders.
- Conduct safety briefings with all parties to provide awareness of parachuting operations.
- Provide quarterly training to area flight schools about parachuting operations.
- Use a parachute landing area that deconflicts student flight activity, as much as possible.

We appreciate the time and attention everyone devoted to the risk assessment. We look forward to your implementation of the prescribed mitigation measures so the risk value of [insert risk value–low, medium, high] can be reduced to a risk value of [insert risk value–low, medium, high] and parachuting operations can begin at the earliest opportunity at [add airport].

UNCONTROLLED COPY WHEN DOWNLOADED
Check with FSIMS to verify current version before using

Add 1) Per our discussions, please provide a plan for implementation of risk mitigations to this office [insert address] by [insert date agreed upon during the risk assessment].

Or

Add 2) We have on file your plan for implementation of risk mitigations and we look forward to notification that this plan is completed by [insert date on plan]. We have attached a copy of the submitted plan for your reference.

If you have questions or need information, please contact [add name–Airport Team Lead] at [add phone number] or via email at [add email].

Sincerely,

[Add name–Airport Team Lead]

cc: FSDO, responsible Flight Standards office, ADO/ARO [any other participating LOBs]

UNCONTROLLED COPY WHEN DOWNLOADED
Check with FSIMS to verify current version before using

Figure 8-3-5G. Airports Letter of Request (Sample Memo Airports Prepares for AFS Requesting Aeronautical Risk Assessment)

Federal Aviation

ADMINISTRATION

MEMORANDUM

Date:	[add date]
To:	Mr. [add name], Manager, General Aviation Operations Branch [AFS-830]
From:	Mr. [add ACO-100 Manager], Manager Airport Compliance, ACO-100
Prepared by:	[add name],
Subject:	[add airport name and location] Municipal Airport [add activity] Risk Assessment

---

This office requests that the General Aviation and Commercial Division (AFS-800), in coordination with [add region] Regional Aviation Specialists and [add region] Flight Standards District Office, conduct an aeronautical activity risk assessment at the [add name] Airport to determine if a [add aeronautical activity] can be safely accommodated under existing conditions.

Below, we have listed the qualifying factor that necessitates a risk assessment [choose one]:

- Change in status quo for existing aeronautical activity (e.g., new type of aeronautical activity or significant operational change) at the identified airport and documented safety issue;
- Existing aeronautical activity with a documented safety issue; or
- Initial proposal for an aeronautical activity with a documented safety issue.

NOTE: Narrative will provide the following information and attachments:

UNCONTROLLED COPY WHEN DOWNLOADED
Check with FSIMS to verify current version before using

The rationale why the proposed activity is restricted as given by the airport sponsor, including:

- A diagram of the proposed ground and/or aerial operations area(s), if known;
- An airport location map with a description of the location and geographic coordinates;
- An airport layout plan including obstacles, NAVAIDs, noise sensitive areas, instrument approach corridor(s), and traffic pattern(s) if, or when, the airport is not Class D;
- Any training material or materials available to users about the operation via a public website;
- A current aerial photo of the airport; and
- Current or proposed procedures for conducting operations on the airport.

Please contact [name] at (202-XXX-XXXX) with any questions and to schedule an initial meeting.

Cc: ADO/ARO

UNCONTROLLED COPY WHEN DOWNLOADED
Check with FSIMS to verify current version before using

Figure 8-3-5H. Airport Sponsor/Operator Letter (Sample Letter Airports Prepares Requesting Information from Airport Sponsor and Operator)

U.S. Department of Transportation

Federal Aviation Administration

Dear Airport Sponsor:

In response to your request for a safety risk assessment for a [add aeronautical activity] at the [insert airport name], please provide the following information so that FAA can better evaluate your specific concerns relating to the proposed operation. Typically, a safety risk assessment is conducted when one of the three following conditions is met:

1. Change in status quo for existing operations (e.g., new aeronautical activity or significant operational change) at the identified airport and documented safety issue;

2. Existing aeronautical activity with a documented safety issue; or

3. New aeronautical activity with a documented safety issue.

Please provide information on the following questions:

1. The type of aeronautical activity being evaluated (please provide information on the scope of the proposed activity);
2. The airport sponsor's explanation of why the existing or proposed aeronautical activity is restricted;
3. The aeronautical activity (parachute, banner tow, etc.) safety issue identified (please be specific is describing the safety issues identified);
4. A diagram of the proposed ground and/or aerial operations area(s), if known;
5. An airport location map with a description of the location and geographic coordinates;
6. An airport layout plan including obstacles, NAVAIDs, noise sensitive areas, instrument approach corridor(s), and traffic pattern(s) if, or when, the airport is not Class D;
7. Any training material or materials available to users about the operation via a public website;
8. A current aerial photo of the airport; and
9. Current or proposed procedures for conducting operations on the airport. This can include information on application, approval process, etc.

Additionally, please provide specific information on the following:

1. Hazards adjacent to the proposed site should be fully described in supporting documentation, to include illustrations, photos, measurements, etc., detailing the impact of the hazard.

UNCONTROLLED COPY WHEN DOWNLOADED
Check with FSIMS to verify current version before using

2. Proposed [add aeronautical activity] sites should be fully described in supporting documentation, to include dimensions, illustrations, photos, measurements, etc., detailing the current constraints.
3. Hazard clearance planes that could impact the proposed drop zone should be fully described in supporting documentation to include hazard clearance measurements for each hazard.
4. Site locations that fall within, or overlap, the protected areas (e.g., runway, taxiway, runway or taxiway safety area, object free area) should be fully described in supporting documentation, to include drawings, illustrations, photos, measurements, etc., indicating the extent to which the site location conflicts with the protected areas.

Please identify any operational conflicts with other airport traffic or other safety issues that would arise or become worse as a result of the establishment of a [add aeronautical activity] at the airport. Include the aircraft categories and number of operations affected, and why it is believed that such concerns cannot be reasonably mitigated.

Please submit this information as soon as practicable. This office will contact you in the event additional information is needed.

Sincerely,

[Add name–Airport Team Lead]

cc: ADO/ARO

8-3-5-17 through 8-3-5-31 RESERVED.

UNCONTROLLED COPY WHEN DOWNLOADED
Check with FSIMS to verify current version before using

VOLUME 11 FLIGHT STANDARDS PROGRAMS

CHAPTER 2 VOLUNTARY SAFETY PROGRAMS

Section 2 Safety Assurance System: Flight Operational Quality Assurance (FOQA)

Source Basis:

- **Section 13.401, Flight Operational Quality Assurance Program: Prohibition Against Use of Data for Enforcement Purposes.**
- **Section 193.1, What Does This Part Cover?**
- **Section 193.3, Definitions.**
- **Section 193.5, How May I Submit Safety or Security Information and Have it Protected From Disclosure?**
- **Section 193.7, What Does it Mean for the FAA to Designate Information as Protected?**
- **Section 193.9, Will the FAA Ever Disclose Information That is Designated as Protected Under This Part?**
- **Section 193.11, What is the Notice Procedure?**
- **Title 49 U.S.C. § 40123, Protection of Voluntarily Submitted Information.**

11-63 PURPOSE AND OBJECTIVES. Flight operational quality assurance (FOQA) is a voluntary safety program designed to improve aviation safety through the proactive use of flight-recorded data. Operators will use these data to identify and correct deficiencies in all areas of flight operations. Properly used, FOQA data can reduce or eliminate safety risks, as well as minimize deviations from regulations. Through access to de-identified aggregate FOQA data, the Federal Aviation Administration (FAA) can identify and analyze national trends and target resources to reduce operational risks in the National Airspace System (NAS), air traffic control (ATC), flight operations, and airport operations. This chapter will define the elements of an FOQA program, the FOQA program approval process, and the role of the principal operations inspectors (POI) and air carrier inspectors in monitoring continuing FOQA operations. This section is related to Safety Assurance System (SAS) Element 1.1.2 (OP) Safety Program (Ground and Flight).

> NOTE: The Air Transportation Division is responsible for management of the FOQA program at a national level. The Air Transportation Division may delegate authority for FOQA program approval, revision, withdrawal, and monitoring to a branch within the division.

11-64 BACKGROUND. The FAA and the air transportation industry have sought additional means for addressing safety problems and identifying potential safety hazards. Based on the experiences of foreign air carriers, the results of several FAA-sponsored studies, and input received from government/industry safety forums, the FAA concluded that wide implementation of FOQA programs could have significant potential to reduce air carrier accident rates below current levels. The value of FOQA programs is the early identification of adverse safety trends,

UNCONTROLLED COPY WHEN DOWNLOADED
Check with FSIMS to verify current version before using

which, if uncorrected, could lead to accidents. A key element in FOQA is the application of corrective action and followup to ensure that unsafe conditions are effectively remediated.

I. FOQA Overview. FOQA is a program for the routine collection and analysis of digital flight data (FDAT) generated during aircraft operations. FOQA programs provide more information about, and greater insight into, the total flight operations environment. FOQA data is unique because it can provide objective information that is not available through other methods. An FOQA program can identify operational situations in which there is increased risk, allowing the operator to take early corrective action before that risk results in an incident or accident. FOQA must interface and be coordinated with the operator's other safety programs, such as the Aviation Safety Action Program (ASAP), Advanced Qualification Program (AQP), pilot reporting systems, and Voluntary Disclosure Reporting Program (VDRP). The FOQA program is another tool in the operator's overall operational risk assessment and prevention program. Being proactive in identifying and addressing risk will enhance safety.

J. FOQA Program Approval. The term "FOQA program" means an FAA-approved program for the routine collection and analysis of digital FDAT gathered during aircraft operations, including data currently collected pursuant to existing regulatory provisions (when such data are included in an approved FOQA program). To gain FAA approval, the operator will write a plan that includes a description of how data are collected and analyzed, procedures for taking corrective action that analysis of the data indicates is necessary in the interest of safety, procedures for providing the FAA access to de-identified aggregate FOQA information, and procedures for informing the FAA as to any corrective action performed. The FAA will monitor trends in FOQA data and the operator's effectiveness in correcting adverse safety trends.

K. FOQA Data Collection and Analysis. In an FOQA program, data are collected using either a special acquisition device such as a Quick Access Recorder (QAR), directly from the flight data recorder (FDR), or by other means. Using one of several available transmission methods, data are periodically retrieved and sent to the operator's FOQA office for analysis. This office usually resides within the flight safety organization at the operator, but may reside elsewhere. The data are then verified and analyzed, using specialized processing and analysis software designed to convert the FDAT into usable information. The operator can use the information and insights provided by FOQA to improve safety by enhancing training effectiveness, operational procedures, maintenance and engineering procedures, and ATC procedures.

11-65 KEY TERMS. The following are key terms that an inspector is likely to encounter in reviewing an operator's FOQA program documentation:

L. Aggregate Data. The summary statistical indices that are associated with FOQA event categories, based on an analysis of FOQA data from multiple aircraft operations.

M. Aggregation. The process that groups and mathematically combines individual data elements based on some criterion (e.g., time, position, event level, and aircraft type). Each aggregation is based on factors of interest to the analyst at a particular point in time.

UNCONTROLLED COPY WHEN DOWNLOADED
Check with FSIMS to verify current version before using

N. Data Management Unit (DMU). A unit that performs the same data conversion functions as a flight data acquisition unit (FDAU), with the added capability of processing data onboard the aircraft. Additionally, this unit has a powerful data processor designed to perform in flight airframe/engine and flight performance monitoring and analysis. Some DMUs have ground data link and ground collision avoidance systems incorporated into the unit.

O. Data Validation. A process during which FDAT are reviewed to verify that they are valid, accurate, and free of errors (such as might result from damaged sensors or faulty recording).

P. De-Identified Data. Data from which any identifying elements that could be used to associate them with a particular flight, date, or flightcrew have been removed.

NOTE: Operator data which is provided to the FAA may be further de-identified by removal of identifying elements that could be used to identify the operator.

Q. Event. An occurrence or condition in which predetermined values of aircraft parameters are measured. If parameter values are exceeded, the Ground Data Replay and Analysis System (GDRAS) will flag the event for further analysis and record it in a database for trending.

R. Event Levels. The parameter limits that, if exceeded, classify the degree of deviation from an operator-determined standard into two or more event severity categories. When assigning levels to an event, consideration is given to compliance with Federal regulations, aircraft limitations, and company policies and procedures.

S. Event Set. A collection of events designed to measure all aspects of normal flight operations for a particular aircraft type by a particular operator. The event set for a particular fleet may be limited by the available parameters on the aircraft.

T. Event Validation. The process in which an event is determined to be a valid sample of operation outside the established norm. Even though aircraft parameter limits may have been exceeded, a valid event may not have occurred (e.g., significant localizer deviation may have occurred when an aircraft makes an ATC-directed sidestep approach to a parallel runway).

U. Flight Data Acquisition Unit (FDAU). A device that acquires aircraft data via a digital databus and analog inputs and formats the data for output to the FDR according to regulatory requirements. Additionally, many FDAUs have capability that enables them to perform additional processing and distribution of data to Aircraft Condition Monitoring Systems (ACMS), Aircraft Communications Addressing and Reporting Systems (ACARS), Engine Condition Monitoring (ECM) systems, or to a QAR for recording/storage of raw FDAT. There are many varieties of FDAUs (known by a number of different acronyms), but all perform the same core functions.

V. Flight Operational Quality Assurance (FOQA). A program for the routine collection and analysis of FDAT to provide more information about, and greater insight into, the total flight operations environment. An FOQA program combines these data with other sources and operational experience to develop objective information to enhance safety, training

UNCONTROLLED COPY WHEN DOWNLOADED
Check with FSIMS to verify current version before using

effectiveness, operational procedures, maintenance and engineering procedures, and ATC procedures.

W. FOQA Monitoring Team (FMT). A group of technical experts, which may include pilots, instructors, check airmen, safety personnel, and maintenance personnel, responsible for reviewing and analyzing flight and event data and identifying, recommending, and monitoring corrective actions.

X. FOQA Steering Committee. An oversight committee formed at the beginning of FOQA program planning to provide policy guidance and vision for the FOQA effort. Membership may include a senior management person and representatives from key stakeholder departments, such as flight operations, maintenance, training, and safety. A representative from the pilot association is also typically included on this committee.

Y. Gatekeeper. The FMT member who is primarily responsible for the security of identified data. The gatekeeper, who is normally appointed by the pilot association, has limited ability to link FOQA data to an individual flightcrew member. If further information is needed to understand the reasons why an event occurred, the gatekeeper is the only individual who may contact a crewmember to elicit further information.

Z. Ground Data Replay and Analysis System (GDRAS). A sophisticated software application that transforms flight-recorded data into a usable form, analyzes the data, detects events, and generates reports for review.

AA. Implementation and Operations Plan (I&O Plan). A detailed plan specifying all aspects of an operator's FOQA program, including how the operator will collect and analyze data, procedures for taking corrective action based on findings from the data, means for providing the FAA with access to de-identified aggregate FOQA information/data, and procedures for informing the FAA of corrective actions undertaken.

BB. Logical Frame Layout (LFL). A data map that describes the format in which parameter data are transcribed to a recording device. This document details where each bit of data is stored and is used by the GDRAS to correctly process raw FDAT.

CC. Operator. A U.S.-certified air carrier or other U.S.-registered aircraft operator with appropriate aircraft and equipment to meet FOQA requirements.

DD. Parameters. Measurable variables that supply information about the status of an aircraft system or subsystem, position, or operating environment. Parameters are collected by a data acquisition unit installed on the aircraft and then sent to a recording device. Parameter data may be continuous (e.g., airspeed) or binary (e.g., switch position on/off). The accuracy over time of parameter data is subject to both the sampling rate and the level of precision (e.g., number decimal places) at which they are recorded.

EE. Quick Access Recorder (QAR). An onboard recording unit that stores flight-recorded data. These units are designed to provide quick and easy access to a removable medium on which flight information is recorded. QARs may also store data in solid-state memory accessible through a download reader. It is possible in some modern systems for the

UNCONTROLLED COPY WHEN DOWNLOADED
Check with FSIMS to verify current version before using

functions of the QAR to be integrated into a single solid-state recording system that also provides the FDR functions that are required by regulation.

FF.Routine Operational Measurement (ROM). A "snapshot" look at a selected parameter value at predefined points in time or space during every flight being analyzed by the GDRAS. ROMs provide standard statistics (e.g., minimum, maximum, or average) for the specified parameter for a particular period of time or condition. Since ROMs are collected on every flight, they provide valuable trending insight into normal operations. ROMs are also useful in establishing a baseline for normal aircraft operation across a fleet.

GG. Stakeholder. Constituencies that are potential users of FOQA data and that have a stake in the program's success.

11-66 APPLICABILITY. FOQA programs are intended for use by any operator desiring to improve the safety of its operation, but this program description and guidance is targeted to those air carriers operating under Title 14 of the Code of Federal Regulations (14 CFR) part 121 and part 135. FOQA is a program entered into voluntarily by the operator.

11-67 FOQA CONCEPTS.

HH. FOQA Is a Proactive Safety Program. Rather than using the vast amount of flight-recorded data only for accident investigation purposes, FOQA focuses on using these data to reduce the risk of, and perhaps prevent, aircraft accidents. FOQA programs seek to discover previously unknown risks and focus the efforts of safety personnel on reducing or eliminating these risks.

II. FOQA Is Focused on Aggregate Trends Rather Than Individual Flights. Through experience, operators with FOQA programs have learned that the primary value of the program comes from trend information based on aggregate FOQA data. Using these data, the operator, sometimes in partnership with the FAA, can identify and correct systemic problems. While FOQA will also provide an airline with information on individual pilot performance on a given flight, it is FAA FOQA policy not to require that the airline convey FOQA data specific to individual pilot performance to the FAA.

JJ. FOQA Analysis Is a Continuous Process. Data are gathered from the aircraft and used to identify trends. Corrective actions are devised to counter adverse trends. Data are again gathered to determine the efficacy of any corrective actions undertaken. If needed, new corrective actions are devised and implemented. Data are used to evaluate the effectiveness of these new actions. This process continues until the actions are deemed successful, and then data are used to monitor long-term success and ensure there is no recurrence.

KK. FOQA Is a Nonpunitive Program. Before entering into an FOQA program, operators ordinarily enter into agreements with their pilots that no data or information developed as a result of FOQA will be used in any pejorative manner by the operator against a pilot. The FAA assures both operators and employees that no enforcement action will be undertaken as a result of FOQA data, except for deliberate or criminal acts, when the operator's FOQA program has been approved by the FAA under 14 CFR part 13, § 13.401. To further strengthen this concept, access to FOQA data is tightly controlled and identifying information is

UNCONTROLLED COPY WHEN DOWNLOADED
Check with FSIMS to verify current version before using

permanently stripped from stored records. The success of a voluntary FOQA program depends on cooperation with pilots who can provide further insights beyond what the data can reveal.

LL. The Sum of FOQA Is Greater Than Its Parts. The FOQA data collected by an individual operator is valuable and useful in improving safety at that operator. Without the knowledge of what other operators are experiencing, however, an operator may not have a complete picture. The FAA, because it does not generate these data, may not have sufficient information about issues confronting the NAS. The aggregation and sharing of FOQA data provides even greater opportunities for improvements in safety than any single operator's program by itself may provide.

11-68 ELEMENTS OF AN FOQA PROGRAM. All FOQA programs are comprised of four basic elements:

- Equipment to collect and record FDAT;
- A means to deliver the data to a place where analysis will occur;
- Software that will process the data, analyze the data, and generate reports of findings from the data; and
- A structure that will devise and track corrective actions based on the data.

MM. Airborne Data Recording Systems. These systems acquire and capture the necessary in-flight information. They include specific aircraft data input sources and parameters, and the equipment to record and store the collected data. Data are gathered via onboard sensors that measure significant aspects of aircraft operation. Most sensor information is carried to its eventual destination via several databuses. Data are collected by interfacing with these buses. Other airborne equipment can be used to process and analyze the collected data, display the data to pilots during flight or on the ground, and transmit data to a GDRAS.

NN. Data Transmittal Systems. Data must get from the aircraft to a location where it can be processed and analyzed. There are numerous ways of accomplishing this, depending on the capabilities of equipment used, both on board the aircraft and on the ground. QARs and some FDAUs have removable media that are taken off the aircraft and hand-delivered or sent by mail to the FOQA office. There are handheld download devices that can be used to download data from an FDAU, QAR, or FDR. The data is stored in the unit and downloaded via modem or the operator's Wide Area Network (WAN). Operators may also use wireless data links (WDL), in which data are downloaded wirelessly to a network connection, which transmits the data to the FOQA office.

OO. Data Analysis Systems. The GDRAS is the heart of the program. This software takes the raw binary data and, using an LFL defined for each fleet make, model, and series (M/M/S) and variant, translates it into engineering units (EU) (e.g., feet, knots, or degrees). It is also the primary tool for analysis of FOQA data. Depending on the capabilities of a particular GDRAS, it may allow examination of an entire distribution of the values of a recorded parameter. It may also allow the operator to look for events that fall outside operator-determined standards based on operator-defined event sets and event levels. It stores those events in a database that is used for generating and tracking trend information. The GDRAS may also be capable of generating ROMs that provide valuable trending insight on what is "normal" in an

UNCONTROLLED COPY WHEN DOWNLOADED
Check with FSIMS to verify current version before using

operation. It generates reports in a variety of formats for use by the operator's analysis team. The GDRAS may also have other statistical analysis tools incorporated in it. To complement the GDRAS, an operator may also choose to use flight animation software or other third-party analysis products as both analysis and communication tools.

PP.FOQA Organizational Structure. The operator must put in place an FOQA structure that is capable of taking corrective actions where the data shows they are warranted. This structure must have the support of senior management and the FOQA stakeholders who will provide the human and financial resources needed to effect corrective actions. It needs to be able to coordinate actions across departmental lines, track assigned corrective actions, and hold departments accountable for implementation of agreed-upon actions. FOQA data can be generated, collected, transmitted, and analyzed, but if corrective actions are not implemented to reverse adverse trends, the FOQA program is not successful.

11-69 FOQA PROGRAM RESOURCES. The planning and implementation of an effective FOQA program will result in a significant commitment of both human and financial resources. During the development of an FOQA program, it is important that the operator understand and be willing to commit the necessary personnel, time, and money needed to ensure that data collected in the program is used effectively. Before embarking on an FOQA program, it is useful for an operator to consult with other operators with established FOQA programs to better gauge the resources required for the effort.

11-70 DEVELOPMENT OF AN FOQA PROGRAM. The development of an FOQA program occurs in three stages as illustrated in the following diagram (Figure 11-13, Planning and Preparation, Implementation and Operations, and Continuing Operations).

Figure 11-13. Planning and Preparation, Implementation and Operations, and Continuing Operations

UNCONTROLLED COPY WHEN DOWNLOADED
Check with FSIMS to verify current version before using

QQ. Phase I. The planning stage sets the policy and direction for the FOQA effort. As these are developed, the necessary resources are committed to implement the program. The policies, procedures, resources, and operational processes for collecting, managing, and using FOQA data are then laid out in the I&O Plan as the program blueprint, and submitted to the FAA to obtain approval for the program. Essential activities during the planning stage include:

- Establishment of a steering committee,
- Defining goals and objectives,
- Identifying and soliciting input from stakeholders,
- Selecting technology and personnel,
- Defining safeguards and events,
- Negotiating pilot agreements, and
- Creating the I&O Plan.

RR. Phase II. The second stage is plan implementation. It will begin once the I&O Plan has been approved and will probably start with a limited number of aircraft. It will involve the installation of the equipment, training of personnel, and collection and processing of data from the aircraft. Work during this stage is focused on the validation of the program, including its logistics and security mechanisms. Essential activities during the implementation stage include:

- Implementing and auditing security mechanisms,
- Installation of equipment,
- Training of personnel,
- Involving stakeholders,
- Collecting and processing airborne data,
- Analysis and validation of data,
- Development and documentation of FOQA system procedures, and
- Defining start-up criteria.

SS. Phase III. The final stage is continuing operations. Once the operator has validated its processes and the accuracy of its data collection and analysis, it will officially launch the program. Data collected can then be used in trend identification, determination of corrective actions, and monitoring the effectiveness of those actions. Expansion of the program will occur as outlined in the FOQA I&O Plan, or as documented in subsequent FOQA I&O Plan revisions. Essential activities during the planning stage include:

- Taking corrective actions,
- Conducting periodic program reviews (PR),
- Tracking costs and benefits,
- Evaluation of emerging technologies,
- Expansion of data usage, and
- Communicating FOQA program benefits.

UNCONTROLLED COPY WHEN DOWNLOADED
Check with FSIMS to verify current version before using

11-71 FOQA I&O Plan. An operator is not required to obtain FAA approval in order to operate an FOQA program. However, an operator who seeks the protections in § 13.401 from the use of FOQA data for enforcement action must obtain FAA approval of its FOQA I&O Plan. Similarly, only operators who have an FAA-approved FOQA I&O Plan are eligible under 14 CFR part 193 and FAA Order 8000.81, Designation of Flight Operational Quality Assurance (FOQA) Information as Protected From Public Disclosure Under 14 CFR Part 193, for protection from public disclosure of FOQA information obtained by the agency. The FOQA I&O Plan is the document that describes an operator's FOQA program for FAA approval purposes. The FAA determines whether an operator's FOQA program is approved and notifies the operator by letter of any concerns and/or formal approval in accordance with procedures outlined in this chapter.

TT. Elements of an I&O Plan. The I&O Plan specifies the organization, technology, policies, procedures, and operational processes used by an operator for its FOQA program. The FAA approval process for an I&O Plan is designed to determine that the operator has identified adequate procedures, organizational resources, and material resources to collect, analyze, and, as required by § 13.401, to act upon information derived from FOQA data when warranted in the interests of safety. The I&O Plan should describe the following elements:

- Program goals and objectives;
- Fleet(s) to be equipped for FOQA;
- Airborne hardware, analysis software, and other equipment to be used in the program;
- Organizational structure for the FOQA program;
- FOQA program personnel and associated roles and responsibilities;
- Procedures for data acquisition and handling;
- Procedures for data analysis and reporting;
- Procedures to implement corrective action(s) when adverse safety trends are discovered;
- Procedures for informing the FAA as to any corrective action that analysis of the data indicates is necessary in the interest of safety;
- Policies on data retention, data security, and crew contact;
- Policies on providing the FAA with de-identified aggregate data and information on corrective actions undertaken;
- Policies and procedures for maintaining and revising the I&O Plan;
- A glossary of terms used in the I&O Plan; and
- Appendices, which should include a copy of the letter of agreement on FOQA with the pilots' collective bargaining unit (if applicable); a list of events, parameters, and threshold values to be used in the program for each FOQA-equipped aircraft fleet; and a list of the documents referenced or cited.

UU. Identifying and Revising I&O Plans. An operator should identify its planned FOQA airborne and ground-based equipment in its initial I&O Plan. Subsequent revisions to the I&O Plan should identify any changes to the planned or implemented equipment. The purpose of this information is to ascertain proposed system capabilities, rather than to approve an operator's selection of a particular brand or vendor. Decisions with respect to the selection of software and equipment vendors are left entirely to the operator. However, the FAA may assess, for the initial

UNCONTROLLED COPY WHEN DOWNLOADED
Check with FSIMS to verify current version before using

plan and any subsequent revisions, whether the proposed products' functionality appears to be adequate to accomplish the program's goals.

VV. The FAA and the Operator. The FAA prefers to interact closely with applicants during the development of the I&O Plan, rather than wait for the formal submittal of the finished plan before establishing substantive dialogue. A discussion and review of rough drafts of document sections early in the development process will facilitate approval. The submittal of the final documents then becomes a formality, with minimal changes required.

WW. Developing an I&O Plan. To assist an operator's development of an I&O Plan, Advisory Circular (AC) 120-82, Flight Operational Quality Assurance, contains a sample I&O Plan template and a copy of the checklist of items to be included in the plan. Although specific areas should be addressed in the plan, the I&O Plan template is flexible enough to allow the operator to tailor the plan to its individual needs.

XX. Using the I&O Plan Checklist. The operator must use the I&O Plan checklist (see Figure 11-14, I&O Plan Checklist) to ensure that the information is included in the I&O Plan. The completed checklist will accompany the proposed I&O Plan when submitted to the FAA. The FAA will use the checklist to verify that the operator has provided the information needed for the initial approval of an FOQA program.

YY. Answering Each Checklist Question. The operator should complete the "Response" column for each question. Appropriate responses are "Yes," "No," or "NA" (not applicable). For all "No" or "NA" responses, the operator's completed checklist should include a brief statement describing why that item was marked "No" or "NA."

ZZ. Completing the Reference Column. The operator should complete the "Reference" column to identify the location of a particular checklist item in the proposed I&O Plan (e.g., "I&O Plan, Section 2.1; Event Definitions, Appendix A," etc.).

11-72 PROGRAM APPROVAL, REVISION, AND WITHDRAWAL OF APPROVAL.

AAA. Initial FOQA Program Approval. To obtain approval for its FOQA program, the operator must develop and submit an FOQA I&O Plan to the FAA as described in this section. The plan must be accompanied by a completed I&O Plan checklist (Figure 11-14), documenting where the checklist items have been addressed in the plan, and a cover letter addressed to the POI requesting approval of the plan. The operator should also simultaneously forward an electronic copy of the plan, cover letter, and completed checklist to the Air Transportation Division. Operators, other than certificated air carriers or air operators, should send an electronic copy of the cover letter and plan directly to the Air Transportation Division. Electronic copies to the Air Transportation Division should be mailed to 9-AFS-HQ-FOQA@faa.gov.

1) The Air Transportation Division is responsible for management of the FOQA program at a national level. When an operator submits an I&O Plan, the Air Transportation Division is responsible for initiating coordination with the POI and providing the POI with assistance in assessing the technical adequacy of the plan. The POI and the Air Transportation

UNCONTROLLED COPY WHEN DOWNLOADED
Check with FSIMS to verify current version before using

Division must use the I&O Plan checklist in Figure 11-14 as an aid in determining the adequacy of the plan.

2) Operators should make any decisions dealing with the selection of software and equipment vendors. Although the operator is required to identify the airborne and ground-based FOQA equipment in its initial FOQA I&O Plan, and should include changes to this equipment in I&O Plan revisions, the purpose of this requirement is to ascertain whether or not the functionality described for these products appears to be adequate to accomplish the program goals described in the operator's plan, rather than to approve the operator's selection of a particular brand or vendor.

3) Evaluation of the I&O Plan should center on whether or not the structure set up for the FOQA program will realistically address the collection and analysis of data, as well as procedures for taking corrective actions. Because of differences in air carriers, the POI is in the best position to assess whether the proposed FOQA program organization and amount of resources dedicated to it are adequate.

4) If the operator has elected to include aircraft maintenance monitoring as part of its FOQA program, the POI is responsible for coordinating with the principal maintenance inspector (PMI) in reviewing those portions of the initially proposed I&O Plan, and subsequent revisions thereto, that pertain to aircraft maintenance.

5) The POI and the Air Transportation Division should mutually review comments from their respective offices on the proposed plan, and establish a consensus concerning whether they should approve the plan. The Air Transportation Division will communicate inadequacies in proposed plans in a letter for the joint signature of the POI and the Air Transportation Division. The POI will deliver the letter to the operator. Similarly, when the POI and the Air Transportation Division concur to approve the plan, the Air Transportation Division will initiate a letter of approval for the joint signature of the POI and the Air Transportation Division. Once signed by the POI, the POI is responsible for the delivery of the approval letter to the operator.

6) Once the FAA approves an I&O Plan, the operator's FOQA program may continue for an indefinite period, unless the operator elects to terminate the FOQA program or the FAA withdraws its approval.

BBB. FOQA Program Revisions. Changes will occur in an operator's program as it assimilates new technologies, modifies event definitions, and changes structures to meet its program's growing needs. Changes are likely to be frequent during the early stages of an operator's FOQA program. When changes occur to previously approved I&O Plan content, the I&O Plan should be revised to document those changes.

1) Operators should revise previously approved FOQA I&O Plans in accordance with standard revision control methodology (i.e., revision control page with remove and replace instructions by page, list of effective pages, and both revision number and revision date on every page of the document). The operator should submit revisions to the POI and an electronic copy to the Air Transportation Division.

UNCONTROLLED COPY WHEN DOWNLOADED
Check with FSIMS to verify current version before using

2) Revisions to approved I&O Plans do not require FAA letters of approval. Because such changes can be potentially frequent and voluminous, revisions to approved plans must be considered to be accepted by the FAA, unless the FAA notifies the carrier in writing within 45 days of submission that it has not accepted the revision, except as follows: notwithstanding this 45-day period, if at any time the FAA discovers that the content of an FOQA I&O Plan is not consistent with § 13.401, or is otherwise unacceptable to the FAA, the FAA may notify the operator that revisions are required in order to maintain approval. Either the POI or the Air Transportation Division should initiate mutual coordination if it appears to either office that it should not accept a revision, in which case the Air Transportation Division will prepare a letter of nonacceptance for joint signature of the POI and the Air Transportation Division, which the POI will transmit to the operator. In addition, unless the POI determines that it is inappropriate for a given operator, he or she should permit the operator to consolidate and submit revisions on a quarterly basis throughout the calendar year, rather than submitting each revision as it occurs. This procedure will reduce workload for both the operator and the FAA.

CCC. Withdrawal of Approval. FOQA is a voluntary program, and the operator may therefore elect at any time to terminate its program. The FAA may withdraw approval of the operator's FOQA I&O Plan, if the FAA determines that the operator has failed to comply with the requirements of § 13.401. The regulations extend certain enforcement protections for FOQA based on the expectation that the operator will act upon FOQA information indicative of an adverse safety trend or a continuing violation. If the FAA determines that the operator is making no effort to develop and implement a plan of corrective action for such items, and the operator is not responsive to FAA efforts to elicit compliance with this requirement, withdrawal of program approval is appropriate. Either the POI or the Air Transportation Division may initiate withdrawal of approval action, subject to coordination between each office. The Air Transportation Division will then initiate a withdrawal of approval letter for joint signature of the POI and the Air Transportation Division, which the POI will transmit to the operator.

11-73 MONITORING OF APPROVED PROGRAMS AND DATA/INFORMATION SHARING. Once the FOQA I&O Plan is approved, the FAA should monitor the overall progress of program implementation. The POI and/or Aircrew Program Manager (APM) should participate in the periodic meetings of the operator's FOQA review team. The focus of these meetings should be on the identification and correction of potential threats to safety uncovered by aggregate FOQA trend information. Due to the de-identification and aggregation processes used, the association of individual flightcrew members with events or specific flights is not possible, nor is it consistent with FAA FOQA policy to request specific crewmember identity or individual flight information from the operator's FOQA data.

DDD. FAA Participation. The main purpose of FOQA programs is to identify adverse safety trends and to proactively initiate corrective action before such trends can lead to accidents. The operator has the primary responsibility for this activity. However, the FAA must verify that the operator is in fact fulfilling this responsibility. While the purpose of FAA participation in operator FOQA review meetings is primarily to observe, it is appropriate for the inspector attending the meetings to offer suggestions or comments that could be helpful in correcting adverse safety trends.

UNCONTROLLED COPY WHEN DOWNLOADED
Check with FSIMS to verify current version before using

EEE. Access to FOQA Data. Under an FAA-approved FOQA program, the POI (and/or APMs) and the PMI (and/or Partial Program Managers (PPM)) should be permitted free and open access to the operator's de-identified aggregate FOQA data, including fleet-specific trend analysis information. The operator must invite the POI (and/or APMs) and the PMI (and/or PPMs) to review trend information with the operator on at least a quarterly basis. This operator may satisfy this requirement at regular operator FOQA meetings, where the operator will present such trend information.

FFF. Public Disclosure Protection. Order 8000.81 designates information received by the agency from an approved voluntary FOQA program as protected from public disclosure, in accordance with the provisions of part 193.

GGG. Protected Information. Under Title 49 of the United States Code (49 U.S.C.) § 40123, certain voluntarily provided safety and security information is protected from disclosure in order to encourage people to provide the information to the FAA. The FAA must first find that 49 U.S.C. § 40123 protects the information. The FAA's rules for implementing 49 U.S.C. § 40123 are in 14 CFR part 193. If the Administrator issues an order designating information as protected under 49 U.S.C. § 40123, that information will not be disclosed under the Freedom of Information Act (FOIA) (Title 5 of the United States Code (5 U.S.C.) § 552) or other laws, except as provided in 49 U.S.C. § 40123, part 193, and the order that designates the information as protected. This FAA order for FOQA (Order 8000.81) is issued under part 193, § 193.11, which sets out the notice procedure for designating information as protected.

HHH. Protection from Use for Enforcement Protection. Section 13.401 protects any FOQA data or information shared with the FAA from use by the FAA for enforcement purposes.

III. Data Protection Warning. Any FOQA data or information shared with the FAA will be protected from public disclosure in accordance with part 193 and Order 8000.81. Any de-identified FOQA data or aggregate FOQA data that leaves the operator's property will be clearly labeled as follows:

> "WARNING: This FOQA information is protected from disclosure under 49 U.S.C. § 40123 and 14 CFR part 193. This information may be released only with the written permission of the Federal Aviation Administration Associate Administrator for Regulation and Certification."

JJJ. Identifying Information. The operator ordinarily will remove any information that could be employed to derive operator identity from any aggregate FOQA data submissions that the operator provides to the FAA in compliance with § 13.401, unless the operator elects to include that information. In the event that the operator chooses to allow FOQA data or aggregate FOQA data that includes airline identity information to be removed from its property, all such data will be labeled as the confidential and propriety property of the operator, in addition to the preceding warning.

KKK. Providing FOQA Data to the FAA. Section 13.401(d) provides that the operators will provide aggregate FOQA data to the FAA in a form and manner acceptable to the Administrator. Operators accomplish this requirement by providing aggregate FOQA data to the

UNCONTROLLED COPY WHEN DOWNLOADED
Check with FSIMS to verify current version before using

FAA's Aviation Safety Information Analysis and Sharing (ASIAS) program, in addition to the certified operator's information-sharing activities that take place with the certificate-holding district office (CHDO). All information included in any industry-sharing activity or any Request for Information (RFI) will be reviewed and approved by the operator before release.
Any information released by the FAA will comply with the provisions of Order 8000.81 and part 193.

LLL. Future Requirements for § 13.401(d) Compliance. In the future, the FAA may provide further guidance regarding requirements for compliance with § 13.401(d). The operator will review those requirements to determine whether to continue its voluntary participation in an approved FOQA program. If the decision is made to continue with the program, the I&O Plan will be revised accordingly.

MMM. Unauthorized Disclosure. All FAA personnel must understand the sensitivity of information and data that the operator may share with the FAA. Any unauthorized disclosure of information or data entrusted to the FAA, even if inadvertent, could cause negative consequences for future cooperation with the FAA in voluntary safety programs.

11-74 ENFORCEMENT POLICY. Except for criminal or deliberate acts, data gathered under an FAA-approved FOQA program will not be used in any enforcement action against that operator or its employees. This protection is in accordance with § 13.401 and no attempt should be made by any inspector to identify individual flightcrew members associated with any FOQA event.

11-75 TRACKING FOQA OVERSIGHT ACTIVITIES. For oversight conducted in accordance with SAS, the inspector must enter the code "FOQA" in the "National Use" field in the SAS database.

UNCONTROLLED COPY WHEN DOWNLOADED
Check with FSIMS to verify current version before using

Figure 11-14. I&O Plan Checklist

Certificate holders should use the following checklist to prepare their I&O Plan and verify they are including all required materials. The FAA will review this checklist to determine that the I&O Plan has specified the items required in an FOQA program. This checklist identifies the minimum requirements of an I&O Plan. An operator's I&O Plan may contain additional information in excess of these minimum requirements. When the operator submits an I&O Plan for FAA approval, a completed copy of this checklist should accompany it.

The "Response" column must be completed for each question. Appropriate responses are "Yes," "No," or "NA" (not applicable). All "No" and "NA" responses should include, in the "Comment" column, a brief explanation of each such response.

The "Reference" column is to be completed for each question to which the operator provides a "Yes" response. The information provided in the "Reference" column must identify the specific location of the subject item in the I&O Plan (e.g., section 2.1).

	Response	Reference	Comment
General			
1. Has the certificate holder requested approval of the I&O Plan in a cover letter addressed to the POI, accompanying submittal of the plan?	❑ Yes ❑ No ❑ NA		
2. Has a copy of the cover letter and plan been forwarded to the Air Transportation Division?	❑ Yes ❑ No ❑ NA		
3. Does the I&O Plan identify the personnel, system equipment, and resources it has committed to support the FOQA program?	❑ Yes ❑ No ❑ NA		
4. Does the I&O Plan acknowledge the requirement to document revisions in accordance with standard revision control methodology?	❑ Yes ❑ No ❑ NA		
5. Does the I&O Plan acknowledge that, following initial FAA approval, it must document subsequent modifications to the FOQA program in revisions submitted to the POI and the Air Transportation Division?	❑ Yes ❑ No ❑ NA		

UNCONTROLLED COPY WHEN DOWNLOADED
Check with FSIMS to verify current version before using

	Response	Reference	Comment
I&O Plan			
1. Does the plan clearly specify the goals and objectives of the FOQA program?	❑ Yes ❑ No ❑ NA		
2. Does the plan clearly identify the major stakeholders within the operator?	❑ Yes ❑ No ❑ NA		
3. Does the plan include a copy of an agreement with the pilot association (if applicable) for FOQA data usage as an appendix?	❑ Yes ❑ No ❑ NA		
4. Does the plan describe operator data safeguard and protection mechanisms?	❑ Yes ❑ No ❑ NA		
5. Does the plan identify the operator fleets (e.g., make, model, series) that are targeted for participation in the FOQA program?	❑ Yes ❑ No ❑ NA		
6. Does the plan describe the capabilities of the planned airborne equipment for FOQA?	❑ Yes ❑ No ❑ NA		
7. Does the plan identify provisions for airborne equipment maintenance and support?	❑ Yes ❑ No ❑ NA		
8. Does the plan specify a fleet installation plan?	❑ Yes ❑ No ❑ NA		
9. Does the plan describe the capabilities of the proposed Ground Data Replay and Analysis System (GDRAS)?	❑ Yes ❑ No ❑ NA		
10. Does the plan identify provisions for maintenance of the GDRAS hardware and software?	❑ Yes ❑ No ❑ NA		
11. Does the plan describe other key technology components of the operator's FOQA program?	❑ Yes ❑ No ❑ NA		
12. Does the plan designate a single point of contact (POC) to oversee the FOQA program?	❑ Yes ❑ No ❑ NA		

UNCONTROLLED COPY WHEN DOWNLOADED
Check with FSIMS to verify current version before using

	Response	Reference	Comment
13. Does the plan define the operator's organizational structure for oversight and operation of the FOQA program?	❑ Yes ❑ No ❑ NA		
14. Does the plan describe the roles and responsibilities of key operator personnel and teams?	❑ Yes ❑ No ❑ NA		
15. Does the plan specify the schedule and timeline for implementing the FOQA program?	❑ Yes ❑ No ❑ NA		
16. Does the plan specify FOQA program start-up criteria?	❑ Yes ❑ No ❑ NA		
17. Does the plan describe how it will train key FOQA team members?	❑ Yes ❑ No ❑ NA		
18. Does the plan describe how the operator will educate its pilots about the FOQA program?	❑ Yes ❑ No ❑ NA		
19. Does the plan describe a method for educating senior management and stakeholders?	❑ Yes ❑ No ❑ NA		
20. Does the I&O Plan specify procedures for implementing and auditing security mechanisms?	❑ Yes ❑ No ❑ NA		
21. Does the plan specify a data storage and retention policy?	❑ Yes ❑ No ❑ NA		
22. Does the plan specify flight data (FDAT) collection and retrieval procedures?	❑ Yes ❑ No ❑ NA		
23. Does the plan describe the procedures for defining fleet-specific events and associated parameters?	❑ Yes ❑ No ❑ NA		
24. Does the plan provide the fleet-specific event definitions, including trigger limits for each event's severity classification, as Appendix 2 to the plan?	❑ Yes ❑ No ❑ NA		

UNCONTROLLED COPY WHEN DOWNLOADED
Check with FSIMS to verify current version before using

	Response	Reference	Comment
25. Does the plan describe the procedures for validating, refining, and tracking event definitions?	❑ Yes ❑ No ❑ NA		
26. Does the plan acknowledge that updates to FOQA event definitions must be included in I&O Plan revisions submitted to the FAA?	❑ Yes ❑ No ❑ NA		
27. Does the plan specify procedures for data review and evaluation?	❑ Yes ❑ No ❑ NA		
28. Does the plan provide for notifying appropriate operator departments of adverse trends revealed by FOQA data flightcrew training?	❑ Yes ❑ No ❑ NA		
29. Does the plan specify procedures for taking, tracking, and following up on corrective actions?	❑ Yes ❑ No ❑ NA		
30. Does the plan describe guidelines for crewmember contact and followup?	❑ Yes ❑ No ❑ NA		
31. Does the plan include a description of how it will document FOQA system procedures?	❑ Yes ❑ No ❑ NA		
32. Does the plan describe the process for joint FAA/operator periodic reviews of the FOQA program and associated aggregate data?	❑ Yes ❑ No ❑ NA		

RESERVED. Paragraphs 11-76 through 11-91.

UNCONTROLLED COPY WHEN DOWNLOADED
Check with FSIMS to verify current version before using

VOLUME 12 INTERNATIONAL AVIATION

CHAPTER 2 FOREIGN AIR CARRIERS OPERATING TO THE UNITED STATES AND FOREIGN OPERATORS OF U.S.-REGISTERED AIRCRAFT ENGAGED IN COMMON CARRIAGE OUTSIDE THE UNITED STATES

Section 3 Part 129 Part A Operations Specifications

12-125 DEFINITIONS.

A. Responsible Flight Standard District Office (FSDO). The phrase "responsible FSDO" used in Title 14 of the Code of Federal Regulations (14 CFR) part 129, § 129.11 means any International Field Office (IFO) with responsibility for the oversight of part 129 operators.

B. Special Interest Flight (SIF). An SIF is any flight conducted in U.S. territorial airspace in aircraft registered in, or designated as, or operating with the International Civil Aviation Organization (ICAO) three-letter designator of a foreign operator in a country that the U.S. State Department has designated as a special interest country.

OPSPEC A001—ISSUANCE AND APPLICABILITY, AND REPORTS (Required for All Air Carriers).

A. Legal Name, Doing Business As (DBA), Air Operator Certificate (AOC), and Economic Authority. OpSpec A001 must identify the OpSpecs holder. The name that appears in OpSpec A001 must be the legal name of the foreign air carrier as shown on its AOC issued by the State of the Operator and as shown on its economic authority applicable to its operations or registrant information filed with the U.S. Department of Transportation (DOT). See also Volume 12, Chapter 3, Section 2 for added detail referencing economic authority, and 14 CFR part 129, § 129.7 for the regulatory reference.

NOTE: If a foreign air carrier were to conduct operations wholly outside the United States that involved the carriage of a U.S. air carrier code, the foreign air carrier would need economic authority in the form of an exemption and would also require a statement of authorization under 14 CFR part 212. It would also have to meet all of the requirements of the Code-Share Safety Audit program. (If a foreign air carrier conducted operations wholly outside the United States that did not involve the carriage of a U.S. air carrier code, then the foreign air carrier would not need DOT economic authority.)

1) The State of the Operator AOC (Identification). The identifying number of the foreign air carrier AOC is as issued by the Civil Aviation Authority (CAA) of the State of the Operator. Foreign air carriers must provide a copy of the AOC and principal inspectors (PI) must verify the AOC with the CAA before the issuance of part 129 OpSpecs.

2) Legal Name and DBA. PIs can verify the foreign air carrier's or Canadian Air Taxi Operator's legal name (listed on its economic authority) and DBA by any of the following methods:

UNCONTROLLED COPY WHEN DOWNLOADED
Check with FSIMS to verify current version before using

a) By requesting from the air carrier or Canadian Air Taxi Operator either their final notice from the DOT or their application for DOT economic authority.

b) By conducting a search on the regulations.gov website at http://www.regulations.gov.

NOTE: A search may be narrowed down by limiting the words used in your search such as: [name of airline] permit, [name of airline] exemption or DOT-OST-[docket year of original request]-[the next 4 numbers that were assigned to the original request]. When reviewing search results, look for key words such as "Final Order" in the title associated with [name of airline] permit and DBA. Another phrase to look for in the search results is "Notice of Action Taken" in the title associated with [name of airline] exemption and DBA. Notice of action taken would indicate the DOT final decision for approval or disapproval of an exemption or permit request. The DOT assigns a docket number to each request and response. The docket number of the response will be associated with the docket number of the request. If you have a copy of the airline request for DOT economic authority, it may be easier to search by the docket number. If searching by docket number, type in all but the last 4 digits of the docket number associated with the request. For example, if the request had a docket number of: "DOT-OST-2012-0211-0001," search using DOT-OST-2012-0211. Your search should yield the following results: DOT-OST-2012-0211-0001, DOT-OST-2012-0211-0002..., as applicable. The search results may not be in numerical or chronological order.

c) By contacting the DOT's Foreign Air Carrier Licensing Division. A foreign air carrier who wishes to change its legal name on its Federal Aviation Administration (FAA) OpSpecs must first register any name change with the DOT following the procedures in 14 CFR part 215, and present evidence of its new name on an AOC issued by the State of the Operator CAA.

NOTE: You can find a list of Canadian Air Taxi Operators registered under 14 CFR part 294 at the following DOT website: https://www.transportation.gov/policy/aviation-policy/licensing/other-special-authorities.

3) The Foreign Air Carrier's or Person's OpSpec Designator/Number (the Part 129 and § 129.14 Templates). This will be the same number obtained from the Aviation Data Systems Branch (AFS-620). Enter it into the foreign air carrier's enhanced Vital Information Database (eVID).

B. The Foreign Air Carrier's or Person's Address.

1) Address of Place of Business or Residence. The foreign air carrier's or person's address is the physical address of the foreign air carrier's place of business or residence within the State of the Operator.

NOTE: Under international law, the State of the Operator is responsible for issuing an AOC to an air carrier that engages in international commercial air

UNCONTROLLED COPY WHEN DOWNLOADED
Check with FSIMS to verify current version before using

transport. The AOC must be issued in accordance with the standards of the International Civil Aviation Organization (ICAO) Annex 6, Part I or III, as applicable to the Convention on International Civil Aviation (the Chicago Convention). Annex 6 defines the State of the Operator as, "The State in which the operator's principal place of business is located or, if there is no such place of business, the operator's permanent residence."

2) The Address of the Foreign Air Carrier within the United States. Some foreign air carriers will have an operations representative in the United States (e.g., a representative for North American operations). If the air carrier does not have an address within the United States, enter "None."

3) Address for International Mail Delivery. The foreign air carrier's mailing address for international mail delivery to its principal place of business or residence within the State of the Operator.

C. Responsible Flight Standards District Office (FSDO). Enter the name and the mailing and overnight delivery address of the International Field Office (IFO) with responsibility for the oversight of the OpSpec holder, to include the PI names and contact information to assist PIs with oversight responsibilities of the OpSpec holder.

D. U.S.-Registered Aircraft. Foreign air carriers operating U.S.-registered aircraft must ensure each flightcrew member complies with 14 CFR part 61, § 61.3(j). See Volume 12, Chapter 4, Section 1 for additional information on pilot age requirements as they relate to foreign air carriers using the services of a pilot of a civil airplane of U.S. registry.

E. Information Required by OpSpec A001 (the Part 129 Template). The following is a summary of some of the information captured in OpSpec A001 for foreign air carriers operating to the United States.

1) Authorized Operations. The kind of operations authorized (scheduled and/or nonscheduled).

2) Foreign Air Carrier Responsibilities. The responsibilities (appropriate DOT economic authority, appropriate Transportation Security Administration (TSA) security program, valid State of the Operator AOC or equivalent document, required reports as specified in OpSpec A001, etc.) of the foreign air carrier in conducting its operation to the United States. See subparagraph G for additional guidance on an appropriate TSA security program.

3) Applicable Regulations. The regulatory sections (14 CFR parts 91 and 129 and Title 49 of the Code of Federal Regulations (49 CFR) part 175) and any other applicable regulations, laws, and orders of the United States or international standards that apply to the operations to be conducted (Annex 1; Annex 6, Part I or III; and Annex 8, Part II, chapters 3 and 4, to the Convention on International Civil Aviation, as applicable).

NOTE: Certain portions of 14 CFR part 382 are also applicable to foreign air carriers.

UNCONTROLLED COPY WHEN DOWNLOADED
Check with FSIMS to verify current version before using

4) OpSpec Effectiveness. General requirements about the effectiveness of an air carrier's OpSpecs as they relate to its DOT economic authority and crewmember licensing and age requirements. Foreign air carriers must comply with the current age requirements of Annex 1 to the Convention on International Civil Aviation.

5) The DOT Economic Authority Type. Based on what the DOT has issued, in the table within subparagraph a of the OpSpec, under the heading of "DOT Economic Authority (Type)," select either "Foreign Air Carrier Exemption," "Foreign Air Carrier Permit," or "Part 294 Registrant." For additional discussion on economic authority, see Volume 12, Chapter 2, Section 9, subparagraph 12-353C.

NOTE: The DOT issues "Part 294 Registrant" for Canadian Charter Air Taxi Operators.

6) The DOT Economic Authority Expiration. Based on what the DOT has issued, in the table within subparagraph a of the OpSpec, under the heading of "DOT Economic Authority (Expiration)," there are three selectable choices: a blank space, "N/A," and "application pending (Part 377 & APA)." If the DOT economic authority is without an expiration date, then select "N/A." If the foreign air carrier's economic authority has an expiration date, then select the blank space and enter the expiration date. In addition to the expiration date, PIs may also enter the Docket ID. PIs must select "application is pending (Part 377 & APA)" if:

a) The foreign air carrier has applied for exemption renewal before the exemption's expiration date;

b) In the application for renewal, the applicant cited 14 CFR part 377 and Administrative Procedures Act (APA); and

c) The DOT has not taken some type of action.

NOTE: A foreign air carrier exemption will always have an expiration date. The DOT will grant an exemption for 1 or 2 years, subject to timely renewal. Per the DOT, there is no limit on the duration that any application may remain pending. In the case of denial of a long-pending application of a carrier that holds part 129 OpSpecs, it's likely that the DOT would advise both the International Program Division (AFS-50) in Washington, DC and the applicable IFO. The DOT will grant a permit to a foreign air carrier under the statute typically 99 percent of the time for an indefinite period, subject to certain conditions tied to the agreements. In the event that the permit covers something extra bilateral (not specifically covered by the agreement), the permit will be granted for 5 years. Canadian air taxi registrations under part 294 are indefinite.

7) DBA Names Authorized by the DOT and the State of the Operator. (See also subparagraph B above.)

8) Authorized Geographic Areas of U.S. Operation. The foreign air carrier must conduct each operation within the United States in accordance with its State of the

UNCONTROLLED COPY WHEN DOWNLOADED
Check with FSIMS to verify current version before using

Operator-issued AOC and associated limitations and provisions, and in accordance with specific authorizations, limitations, and procedures contained in these FAA-issued foreign OpSpecs. For the purpose of this OpSpec, the available authorized areas are selectable as follows:

- USA—The 48 Contiguous United States and the District of Columbia.
- USA—The State of Alaska.
- USA—The State of Hawaii.
- USA—The Commonwealth of Puerto Rico.
- USA—The Commonwealth of the Northern Mariana Islands (CNMI).
- USA—The Territory of American Samoa.
- USA—The Territory of Guam.
- USA—The Territory of the U.S. Virgin Islands.

9) Authorized Radio Call Sign and the ICAO Three-Letter Designator. Like the United States, some foreign CAAs do not require all air carriers to whom they have issued an AOC to obtain a radio call sign and the ICAO three-letter designator. It is each operator's responsibility to provide the responsible PI with supporting documentation. PIs may find additional information on international standards in ICAO Annex 10, Volume II, chapter 5, paragraph 5.2.1.7.2, Radiotelephony Call Signs for Aircraft.

10) Nonscheduled Flight Notification Method. If the air carrier conducts only nonscheduled operations, leave the "Airports to be Used for Scheduled Operations" table blank. If the air carrier to whom the FAA issues part 129 OpSpecs plans on conducting a nonscheduled flight, the air carrier must provide the responsible IFO with advance written notice (including by fax, email, or paper document) of the operation. For urgent situations, a foreign air carrier may use telephone notification to the responsible IFO, followed by a written notice sent as soon as possible. At a minimum, the nonscheduled foreign air carrier must provide the following information for each flight conducted to, from, or within the United States:

a) Aircraft registration.

b) Aircraft make/model.

c) All arrival and departure airports to be used within the United States.

d) Estimated arrival and departure times at each airport used.

NOTE: As directed by the IFO, the air carrier will provide updates on the estimated time of arrival (ETA) and departure when delays are expected.

e) Purpose or description of flight. For example, ferry flight for maintenance, golf charter, dropping off passengers, etc.

f) If possible, the air carrier should provide a contact phone number within the United States. An example of this would be a Fixed-Base Operator (FBO), a ground-handling company, or a contract maintenance provider.

UNCONTROLLED COPY WHEN DOWNLOADED
Check with FSIMS to verify current version before using

NOTE: Foreign air carriers from U.S. State Department-designated special interest countries to which the FAA issues part 129 OpSpecs are exempt by the U.S. State Department from the previously required Special Interest Flight (SIF) program notifications. A part 129 foreign air carrier's route information will no longer be posted on the FAA SIF website. A foreign air carrier from a special interest country conducting a 14 CFR part 375 operation under part 375, § 375.42 (authorized by the DOT for occasional plane load charters) must continue to make SIF notifications. A part 375 operator's route information is required to be posted on the SIF website. An inspector conducting a ramp inspection may use the FAA SIF website as an additional tool to help determine the type of operation conducted. Inspectors should direct any operational issues with a specific SIF to the Domestic Events Network (DEN). PIs should direct general questions on SIFs, including link and access authorization for the FAA SIF website, to the Strategic Operations Security Group (AJR-22) via email at 9-ATOR-HQ-IFOS@faa.gov. PIs may find FAA U.S. Territorial Airspace Route Authorization Requirements for SIF operators for each special interest country in the International section of the FAA Class II Notices to Airmen (NOTAM) publication at http://www.faa.gov/air_traffic/publications/notices/.

11) Airports Used in Scheduled Operations. For scheduled operations, select one ICAO airport identifier per drop-down menu. For additional details on foreign air carrier actions (e.g., what the foreign air carrier must provide to the IFO to operate into an airport in the United States and what the IFO uses to evaluate whether to approve the addition of an airport to OpSpec A001), see Volume 12, Chapter 2, Section 5, OpSpec C067, subparagraph C. For scheduled operations, the foreign air carrier will provide the list of airports to be used and included as follows:

a) Regular Terminal. An airport approved under scheduled service to a community as the regular stop to that community.

b) Alternate. An airport at which an aircraft may land if a landing at the intended airport becomes inadvisable or if operational necessity requires the use of that airport. Select the most probable alternate for the regular terminal airport listed for a given regular terminal airport. This does not preclude the foreign air carrier from using an alternate airport not listed in the table if weather, air traffic control (ATC) routing, or other operational necessity requires it.

c) Technical/Refueling Stop. Leave blank if the foreign air carrier has no technical/refueling stop that it will use on a regular basis for the regular terminal airport.

NOTE: For nonscheduled operations, the "Airports to be Used for Scheduled Operations" table will be left blank. See Volume 11 for inspector guidance on Environmental Assessments (EA) when adding a new scheduled destination airport for the operator. For a checklist of the information needed by the General Aviation Operations Branch (AFS-830) for an environmental review, refer to the document in the Web-based Operations Safety System (WebOPSS) for OpSpec A001 by clicking the Guidance button and locating the document in the Guidance pop-up window titled "OpSpecs Environmental Reviews."

UNCONTROLLED COPY WHEN DOWNLOADED
Check with FSIMS to verify current version before using

12) Notifications. Changes to any information in the FAA-issued OpSpecs, or the basis upon which the FAA issued them, require that the foreign air carrier notify the responsible IFO in a form and manner acceptable to the FAA. For example, changes to the:

a) Foreign air carrier (company) ownership;

b) Addresses for the foreign air carrier and contact details, such as telephone, fax, and email;

c) Foreign air carrier agent for service and management personnel;

d) Economic authority issued by the U.S. DOT;

e) Airports authorized for scheduled operations to the United States by the State of the Operator and to be used in the United States; and

f) Notification method for nonscheduled flights to the United States.

NOTE: The responsible IFOs, if necessary, should make periodic inquiries to the air carrier to ensure the currency of information.

13) Additional Reports. The foreign air carrier must provide additional reports and notifications when requested by the FAA. For example:

a) A copy of the valid AOC or equivalent document issued by the State of the Operator;

b) For scheduled flights, the schedule and frequency of flights and any changes to those schedules and frequencies; and

c) The foreign air carrier's operations and maintenance liaison persons and contractors at any U.S. airport served on a scheduled basis.

14) Responsible FSDO. See subparagraph C above.

F. Information Required by OpSpec A001 (the § 129.14 Template). The following is a summary of the information captured in OpSpec A001 for foreign air carriers or foreign persons operating U.S.-registered aircraft only outside the United States.

1) The Foreign Air Carrier's or Foreign Person's Name. See subparagraph A.

2) The Foreign Air Carrier's or Foreign Person's Addresses. See subparagraph B.

3) DBA Names Authorized by the State of the Operator. See subparagraph A.

4) The Foreign Air Carrier's or Foreign Person's OpSpec Designator/Number. See subparagraph A.

UNCONTROLLED COPY WHEN DOWNLOADED
Check with FSIMS to verify current version before using

5) The Foreign Air Carrier's or Foreign Person's State's Operating Certificate Number.

6) The Foreign Air Carrier's or Foreign Person's Representative. This representative will be the primary representative for all contact regarding the air carrier's or person's U.S.-issued OpSpecs for the maintenance program and minimum equipment list (MEL) approval.

7) Agent for Service Located in the United States. See also Volume 12, Chapter 3, Section 2 and Volume 12, Chapter 2, Section 3, OpSpec A006.

8) Responsible FSDO. See subparagraph D.

G. Transportation Security Administration (TSA) Security Program. Part 129 operators must maintain an appropriate security program, as required by the TSA. If a security program is required by TSA, then responsible PIs need documentation from their part 129 operators (on the TSA security program) prior to issuing OpSpecs. The TSA will make the determination if the operator needs a security program. It is each operator's responsibility to contact the TSA. The TSA will analyze the carrier's proposed operations and fleet. Per the TSA:

1) Title 49 CFR part 1546 identifies operators not obligated to hold a security program.

2) Many smaller charters may fall into the category of not needing a security program. Essentially, foreign air carriers with planes with less than 60 seats, less than a certain takeoff weight, not flying into/out of a sterile area, and not departing from an area where the TSA has determined a threat exists are not required by the TSA to have a security program. Operators may opt in to have a TSA security program, if they like.

3) The TSA Office of Global Strategies (OGS) maintains a list of part 129 operators with valid TSA security programs. Operators on the TSA's OGS list are carriers that hold a security program (model security program (MSP), all-cargo international security procedure (ACISP), twelve-five standard security program (TFSSP), etc.) and actively fly to/from the United States. Active is defined by the individual TSA International Industry Representative (IIR) and can include asking if the carrier has flown to/from the United States in the past year, and will the carrier fly to/from the United States in the next year. If both answers are no, then typically those operators will be removed from the Automatic Detection and Processing Terminal (ADAPT).

NOTE: If the responsible IFO has any concerns regarding an operator's TSA security program, they will contact AFS-50 who will assist in coordinating with the TSA, as appropriate. IFOs may request a copy of the latest OGS list from AFS-50.

OPSPEC A002—DEFINITIONS AND ABBREVIATIONS (Required for All Air Carriers). OpSpec A002 includes definitions of words or phrases used in other OpSpecs paragraphs. These definitions enhance understandings between the FAA and foreign air carriers. These definitions have been developed by the International Programs and Policy Office (AFS-50) and must not be

UNCONTROLLED COPY WHEN DOWNLOADED
Check with FSIMS to verify current version before using

changed. Any recommendations for changes/addition to these definitions will need to be forwarded to AFS-50 for review and determination. An addition of a definition by an International Field Office (IFO) would make the OpSpec nonstandard and, as such, must be processed as a nonstandard OpSpec request through AFS-50 for approval.

OPSPEC A003—AIRCRAFT AUTHORIZATION (Required for All Foreign Air Carriers Operating to the United States—Only the Part 129 OpSpec Templates, Not the § 129.14 OpSpec Templates).

A. General. OpSpec A003 lists the aircraft that the FAA has authorized a foreign air carrier to use in its operations to the United States by aircraft, configuration, conditions, and certain operations authorized. This paragraph also describes the following specific requirements in order for the aircraft to be listed in OpSpec A003 and used by a foreign air carrier to conduct its international air transportation operations within the United States.

NOTE: Civil aircraft operated solely in nonrevenue service (not holding out to the public) to the United States by a foreign air carrier who also conducts scheduled or nonscheduled operations in common carriage (holding out to the public) to the United States do not need to be listed in OpSpec A003.

1) Aircraft Registration and Airworthiness Certificates. The aircraft must have on board a current and valid Certificate of Airworthiness and registration issued by the State of Registry. The Convention on International Civil Aviation (the Chicago Convention) requires in Article 29 that aircraft engaged in international navigation carry a Certificate of Airworthiness and registration. Airworthiness and registration certificates are also required for foreign air carrier aircraft by 14 CFR part 91, § 91.203(a)(1) and (2); part 129, § 129.13; and part 375, § 375.20. If the aircraft is subject to an agreement made under Article 83 *bis* (see Volume 12, Chapter 2, Section 8) to the Chicago Convention, the Certificate of Airworthiness may be issued by the State of the Operator.

2) Airworthiness Code. The State of Registry must have a comprehensive and detailed national airworthiness code established for the class of aircraft as required by International Civil Aviation Organization (ICAO) Annex 8, Part II, chapter 3, paragraph 3.2.2. Determinations concerning the adequacy of a State's airworthiness code are made under the FAA's International Aviation Safety Assessment (IASA) Program. If any doubt exists, contact the International Program Division (AFS-50) before adding the aircraft.

3) Maintenance Programs. Each aircraft must have a maintenance program approved by the State of Registry or, for an aircraft subject to an Article 83 *bis* agreement, by the State of the Operator. For aircraft subject to an Article 83 *bis* agreement, verify the agreement has been registered with ICAO and covers the applicable aircraft (see Volume 12, Chapter 2, Section 8). The maintenance program shall conform to the international standards set forth in ICAO Annex 6, Part I, chapters 8 and 11 for airplanes, and ICAO Annex 6, Part III, chapters 6 and 9 for helicopters. For each U.S.-registered aircraft, the FAA must have approved the maintenance program in accordance with § 129.14(a).

UNCONTROLLED COPY WHEN DOWNLOADED
Check with FSIMS to verify current version before using

4) Minimum Equipment List (MEL) Exceptions. The aircraft manufacturer develops the Master Minimum Equipment List (MMEL) in conjunction with the State of the manufacturer's Civil Aviation Authority (CAA). The State of the Operator approves a foreign air carrier's MEL. Each foreign air carrier who wants to operate U.S.-registered aircraft with certain instruments or equipment inoperative must have OpSpec D095 issued to them (see Volume 12, Chapter 2, Section 6). If the foreign air carrier does not have an MEL, then the principal inspector (PI) must ensure that the following selectable limitation is selected in OpSpec A003 under subparagraph b:

> "The following aircraft listed below do not have a minimum equipment list (MEL). Accordingly, the foreign air carrier must not take off the following aircraft with inoperable instruments or equipment installed."
>
> NOTE: Additionally, the PI must ensure that the appropriate aircraft make, model, and series (M/M/S), aircraft registration, or both are listed in the text box below the above limitation. For example, if a foreign air carrier has three aircraft listed in the table for OpSpec A003, none of which has an MEL, then the PI should just list the M/M/S. If a foreign air carrier has three aircraft listed in the table for OpSpec A003, all of which are the same M/M/S, but one of the aircraft does not have an MEL, then the PI needs only to ensure that the registration number of the aircraft without the MEL is listed.

5) Airworthiness Directives (AD). A foreign air carrier must have properly accomplished all ADs issued by the State of Registry or adopted by the State of Registry from the State of Design applicable to each aircraft listed, in accordance with ICAO Annex 6, Part I, chapters 8 and 11 (airplanes) and ICAO Annex 6, Part III, chapters 6 and 9 (helicopters), as applicable. After the aircraft is listed in the OpSpecs, the failure to comply on an ongoing basis with all applicable ADs is justification for removing the aircraft from the OpSpecs.

> NOTE: OpSpec A447 must also be issued to each carrier operating U.S.-registered aircraft, which are listed in OpSpec A003, to enable the FAA to notify the foreign air carrier regarding emergency ADs.

6) Flight Deck Security. Section 129.28 establishes additional flight deck security requirements to prevent unwanted persons from entering the flight deck when operating to the United States.

7) Aircraft Accident Liability Insurance. A foreign air carrier's aircraft must have accident liability insurance coverage and meet the requirements of 14 CFR part 205.

B. Enter Aircraft Information. All aircraft information must be first entered into the Web-based Operations Safety System (WebOPSS) in the left navigation area, under "CHDO," "Maintain Operator Data," "Aircraft." Once you do that, when you move a new OpSpec A003 template to the workspace, all of the information entered under "Operator—Aircraft" will self-populate the table. All aircraft that the foreign air carrier owns, dry leases, or wet leases that it will operate within the United States must be entered in OpSpec A003. Both foreign- and U.S.-registered aircraft must be entered. The aircraft of a foreign air carrier that provides service

UNCONTROLLED COPY WHEN DOWNLOADED
Check with FSIMS to verify current version before using

to the United States will only be listed in OpSpec A003 of the "primary operator's" OpSpec A003, in the case of an interchange operation; the "lessor's" OpSpec A003, in the case of a wet lease; or the "lessee's" OpSpec A003, in the case of a dry lease (see Volume 12, Chapter 2, Section 9).

NOTE: For additional help in adding an aircraft to part 129 OpSpecs in the left navigation area, select "CHDO—User Manual" under "Tools."

1) M/M/S. When entering an authorized M/M/S into OpSpec A003, select it from the listing provided in WebOPSS. If the appropriate M/M/S cannot be found in WebOPSS, inspectors should immediately notify the WebOPSS help desk so that the table can be updated. On the "Certificate Holder, Aircraft Authorization" menu, enter data on both the "General" and "Detail" tabs.

2) Aircraft Serial Number. Enter the manufacturer's aircraft serial number.

3) Aircraft Registration Number. Enter the aircraft registration marking assigned by the State of Registry. The ICAO defines the State of Registry as "the State on whose register the aircraft is entered." In accordance with Article 18 of the Chicago Convention, an aircraft cannot be validly registered in more than one State.

4) Configuration. PIs must select "All Cargo," "Passenger," "Combi," or "Pax and Cargo" based on the main cabin configuration.

a) All Cargo. The main cabin is for cargo hauling only. There may be a few supernumerary seats.

b) Passenger. The main cabin is for passenger (pax) seating only. There may be overhead bins for bags.

c) Combi. The main cabin of the airplane is a simultaneous combination of passenger and cargo. For example, half of the main cabin volume is for cargo and half of the main cabin volume is passenger seating.

d) Pax and Cargo. At one time the main cabin is All Cargo (see subparagraph a)) and at another time the main cabin is Passenger (see subparagraph b)), though not at the same time.

EXCEPTION: The PI must ensure that the selection represents how the aircraft's main cabin can be used and that it is not contrary to the type of service for which the aircraft is approved. For example, if an aircraft's main cabin can be configured for "Pax and Cargo," but the State of the Operator and the Department of Transportation (DOT) economic authority only authorize the air carrier to carry passengers, then the PI must select "Passenger."

5) En Route. Inspectors must enter the appropriate en route flight rule for each M/M/S. If the M/M/S is a large aircraft, as defined in OpSpec A002, and/or approved for only instrument flight rules (IFR) operations by the State of the Operator's CAA, select the phrase

UNCONTROLLED COPY WHEN DOWNLOADED
Check with FSIMS to verify current version before using

"IFR" in the column labeled "En Route." If the M/M/S is other than a large aircraft, as defined in OpSpec A002, and/or restricted to visual flight rules (VFR)-only operations by the State of the Operator's CAA, select the phrase "VFR." If the M/M/S is other than a large aircraft, as defined in OpSpec A002, and/or approved for both IFR and VFR operations by the State of the Operator's CAA, select the phrase "IFR/VFR."

6) Condition. Select the day/night condition for each M/M/S. If the State of the Operator's CAA approves the M/M/S for both day and night conditions, select the phrase "Day/Night" in the column labeled "Condition." If the State of the Operator's CAA approves the M/M/S for daylight conditions only, select the phrase "Day Only."

7) Noise Stage. This only applies to turbojet airplanes with a maximum weight of more than 75,000 pounds; otherwise, enter "N/A." Select the aircraft noise stage II, III, or IV. If the aircraft is stage II or the aircraft is a dual-noise-stage-certificated B747, then OpSpec A026 must also be issued to the foreign air carrier. Evidence of noise stage should be from approved aircraft documentation, such as a noise certificate (if issued), approved flight manual, or other document issued by the State of Registry.

8) Reduced Vertical Separation Minimum (RVSM). The operational authorization of RVSM is provided by the State of the Operator. OpSpec A003 is used to confirm that the foreign air carrier has operational approval. The maintenance program is approved by the State of Registry. For U.S.-registered aircraft, the United States approves RVSM maintenance as part of the maintenance program authorized via OpSpec D085. The State of the Operator must have regulation and supporting guidance documents for the issuance of RVSM.

a) Authorized for RVSM Operations. If the foreign air carrier has aircraft that are authorized for RVSM operations by the State of the Operator, then for each authorized aircraft, select "Yes" in the "RVSM" column of Table 1 in OpSpec A003.

NOTE: If the PI has concerns as to how the State of the Operator approved the air carrier for RVSM (e.g., the State of the Operator approved the air carrier without regulation and supporting guidance documents for the issuance of RVSM), then the PI must advise the International Operations Branch (AFS-52). AFS-52 will coordinate with the Flight Technologies and Procedures Division (AFS-400) subject matter expert (SME), initiate discussions with the State of the Operator (as appropriate), and advise the PI on resolution.

b) Not Authorized for RVSM Operations. If the foreign air carrier is not authorized for RVSM, then select "No" in the "RVSM" column of Table 1 in OpSpec A003.

c) Authorization Process. Before designating the airplanes in OpSpec A003, the responsible International Field Office (IFO) inspectors must obtain documentation from the foreign air carrier or operator for verification of RVSM approval to include the following:

1. In the case of foreign-registered airplanes, a copy of their foreign OpSpecs or other issued Air Operator Certificate (AOC) special operating provisions that show they have been authorized by the State of the Operator for RVSM. The documentation from the foreign

UNCONTROLLED COPY WHEN DOWNLOADED
Check with FSIMS to verify current version before using

CAA must show the M/M/S, aircraft serial number, and aircraft registration number of the airplanes that the operator has been authorized to fly in RVSM airspace. Normally for foreign-registered aircraft, the responsible IFO inspectors will only need to examine the foreign OpSpecs or other AOC special operating provisions documented evidence of foreign CAA approval. If the responsible IFO believes it to be necessary in the interest of safety to verify such RVSM authorization, then the responsible IFO inspector(s) may require that the operator submit the following:

a. Documentation of airplane RVSM eligibility. The foreign air carrier's or operator's aircraft must comply with RVSM standards. For in-service aircraft, documentation showing that inspections and/or aircraft system modifications are completed as required by the applicable Service Bulletin (SB), Service Letter (SL), Supplemental Type Certificate (STC), or other approved documents approved or accepted by the State of Registry's CAA. For aircraft that were manufactured RVSM-compliant, the Airplane Flight Manual (AFM) or Type Certificate Data Sheet (TCDS) contains a statement of RVSM eligibility, as appropriate.

NOTE: For U.S.-registered airplanes, the FAA is the State of Registry's CAA and documentation must be in accordance with subparagraph b below.

b. Documentation showing that the State of the Operator's CAA has approved the foreign air carrier's or operator's RVSM maintenance program and that it is acceptable to the State of Registry.

c. Documentation that the State of the Operator's CAA has approved/accepted the operator's plan to participate in a monitoring program.

d. Documentation that the State of the Operator's CAA has approved/accepted the foreign air carrier's or operator's RVSM operational procedures in their manual required by ICAO Annex 6, Part I, chapter 4, paragraph 4.2.

2. In the case of U.S.-registered airplanes, documentation of airplane RVSM eligibility. For in-service aircraft, the FAA determines that inspections and/or aircraft system modifications are completed as required by the applicable SB, SL, STC, or other Aircraft Certification Office (ACO)-approved document. For aircraft manufactured RVSM-compliant, the AFM or TCDS contains a statement of RVSM eligibility, as appropriate.

9) Additional Aircraft Information. When adding aircraft information into WebOPSS under "CHDO," "Maintain Operator Data," "Aircraft," enter, select, or check other information about the aircraft as appropriate to the AOC and the aircraft used. These include nose number (or "N/A"); Multiengine Land (MEL), Single-Engine Land (SEL), Multiengine Sea (MES), Single-Engine Sea (SES), etc., or § 129.14; number of certificated and installed seats; and Civil Reserve Air Fleet (CRAF) information, if appropriate. Fields denoted with an asterisk are required. The "Authorizations" column should have appropriate entries assigned (e.g., RVSM, Category (CAT) II, or CAT III) for each aircraft entry.

10) Ground Deicing Program. The PI must ensure that the appropriate response from the drop-down list (yes or no) is selected in the column labeled "Ground Deicing Program" for each CAA-approved aircraft based on whether or not the M/M/S has been approved for

UNCONTROLLED COPY WHEN DOWNLOADED
Check with FSIMS to verify current version before using

ground deicing. If requested, the foreign air carrier must provide (as proof of CAA ground deicing program approval) their PI with either:

- The English-language material provided to the U.S. ground deicing contractor (if the foreign air carrier's manual reference for ground deicing is not in English); or
- The foreign air carrier's manual reference (if in English).

a) Approved Program. A foreign air carrier must communicate with each contractor prior to having its aircraft deiced on procedures to be followed. Contractors are not regulated by the FAA and will not have approved or accepted deicing programs; however, the contractor is required to follow the air carrier's approved deicing program. It is the air carrier's responsibility to communicate its procedures to each contractor and to ensure that the air carrier's approved program is being followed. ICAO Annex 6, Part I, chapter 4 states in part that:

1. A flight must not commence until the pilot in command (PIC) is assured that the airplane is Airworthy in respect to ice contamination.

2. Accumulation of ice or other naturally occurring contaminants must be removed so that the airplane is kept in an Airworthy condition prior to takeoff.

b) Not-Approved Program. Some CAAs do not require a system to conduct operations during ground icing conditions if the air carrier:

- Only operates in areas where ground icing conditions should not occur, such as Puerto Rico and other specific islands and territories within the region of the South Pacific Ocean, such as Guam and Samoa.
- Is only authorized VFR with small airplanes or helicopters. These are typically nonscheduled, on-demand charter operations (e.g., from Canada).

NOTE: The above is not an exclusive list. There are CAAs that authorize an operator into IFR, but not for ground deicing.

c) ICAO Annex 6.

1. In accordance with ICAO Annex 6, Part I, 4.3.5, for airplanes, or Annex 6, Part III, 2.3.5, for helicopters, when a flight is planned, or expected to operate in suspected or known ground icing conditions, such that frost, ice, or snow may reasonably be expected to adhere to the aircraft, the foreign air carrier shall not take off unless the aircraft has been inspected for icing and, if necessary, has been given appropriate deicing/anti-icing treatment. Accumulation of ice or other naturally occurring contaminants shall be removed so that the aircraft is kept in an Airworthy condition prior to takeoff.

2. The foreign air carrier shall have a system to conduct operations in accordance with the requirements above and the carrier's system shall be contained in the manual required by ICAO Annex 6, Part I, 4.2.3, and Appendix 2, 2.1.15, for airplanes, or Annex 6, Part III, 2.2.3, and Attachment G, 2.1.14, for helicopters. The foreign air carrier's

UNCONTROLLED COPY WHEN DOWNLOADED
Check with FSIMS to verify current version before using

system shall not conflict with the aircraft approved flight manual, and shall have been accepted or approved by the foreign air carrier's State CAA.

3. In accordance with part 129, foreign air carriers operating to the United States must comply with the minimum ICAO Annex 6 standards.

11) Data Communications (Data Comm). The FAA has made Departure Clearance (DCL) available using Future Air Navigation System 1/A (FANS 1/A) at various airports within the United States. This is an alternative means to voice communication between pilots and air traffic control (ATC) with data link communications at those U.S. airports for the purpose of picking up DCLs. Controller-Pilot Data Link Communication (CPDLC)-DCL is now operational at various U.S. airports. In 2018, data link communications will be implemented in U.S. en route airspace. When that occurs, if the operator has Data Comm that meets the requirements of U.S. airspace and is already authorized via A003, then the operator can use Data Comm within the United States whenever/wherever it is available.

NOTE: The National Airspace System (NAS) Data Communications Guide replaced the Data Communications Implementation Team (DCIT) CPDLC-DCL Flight Deck User Guide. When Data Comm is available for en route in U.S. airspace, the current edition of Advisory Circular (AC) 90-117, Data Link Communications, will contain the requirements for en route in U.S. airspace as well.

12) Data Comm Criteria Acceptable to the FAA. The FAA does not approve data link communications installations, training programs, MELs, or maintenance programs for foreign operators operating non-U.S.-registered aircraft. Such authorizations are addressed as specified by the State of the Operator. However, since compatibility of data link communications within U.S. airspace is essential, part 129 operations guidelines for data link communications are issued. Compliance with these data link communications provisions ensures both data link communication system and procedural compatibility. The FAA issues limitations for data link communications, in accordance with, but not limited to, the following:

- Global Operational Data Link (GOLD) Manual, ICAO global guidelines for data link operations.
- If adopted by the CAA, equivalent standards to AC 90-117.

NOTE: PIs must coordinate all acceptable criteria other than that specified above with AFS-52, who will coordinate with the AFS-400 SME, as appropriate. For a list of applicable ICAO Standards and Recommended Practices (SARP), refer to AC 90-117.

13) Data Link Address. An appropriate data link must be installed and operated on suitable frequencies specified by ATC during flight in U.S. airspace if procedures are predicated on its use. A unique and specific address, the ICAO 24-bit aircraft identification, must be assigned to the airplane and the data link must recognize this address. When properly set, the unique address may not be altered, set to a duplicated address, or set to an address that potentially interferes with ATC or data link safety functions.

UNCONTROLLED COPY WHEN DOWNLOADED
Check with FSIMS to verify current version before using

14) Data Link Coordination. A data link capable of coordinating with air traffic facilities using RTCA DO-219, Minimum Operational Performance Standards (MOPS) for ATC Two-Way Data Link Communications, or other equivalent standards must be installed if operations will be predicated on its use. The data link system should be operated in an appropriate data link mode during flight in U.S. airspace using data link, except as provided for by the MEL provisions acceptable to the State of the Operator.

15) Data Link Training Program. All foreign air carrier flightcrews must have successfully completed their State of the Operator's CAA-approved training program for data link communication prior to conducting data link communication in U.S. airspace.

16) Foreign Air Carrier Actions. A foreign air carrier applying to the FAA to conduct data link communications within U.S. airspace must provide the responsible IFO with evidence that the State of the Operator has approved the foreign air carrier for this operation. The approval must include:

- Documentation (e.g., foreign-issued OpSpecs, official letter) from the State of the Operator's CAA stating that the foreign air carrier is approved for data link communication in accordance with XXXX (e.g., ICAO GOLD) criteria, that the aircraft and aircraft equipment are eligible and approved for data link communication, and that the flightcrews are trained and the operator has procedures to conduct data link communication.
- Supporting documentation for A003 Table 1 data link system flight plan code (filled in field 10a) that meets U.S. domestic airspace requirements for each aircraft M/M/S. Operators may find U.S. domestic airspace requirements as well as the corresponding flight plan codes in AC 90-117. PIs may accept equipment eligibility that has been determined eligible and approved by a foreign air carrier's CAA when it is also documented by the AFM or other FAA-recognized means. If the documentation includes (marketing) terminology that is not covered by AC 90-117 or de-identified in GOLD and listed as available for that M/M/S, then the operator will need to obtain a letter from the Original Equipment Manufacturer (OEM). The OEM will need to de identify the (data link communication marketing) terminology in internationally accepted terms which can be found in the current edition of ICAO Doc 4444, Procedures for Air Navigation Services—Air Traffic Management.
- Any other pertinent information.

NOTE: For airlines that wish to configure and receive FANS CPDLC dispatch messages, refer to the Subscriber Database Website User's Guide at: http://dcis.harris.com/sites/default/files/SDB%20User%27s%20Guide%20v3.1_0.pdf.

17) Foreign Air Carrier Authorization. The PI must select all of the applicable data link flight plan codes and the Data Comm boilerplate limitation after the principal operations inspector (POI) and principal avionics inspector (PAI) agree that the foreign air carrier:

UNCONTROLLED COPY WHEN DOWNLOADED
Check with FSIMS to verify current version before using

a) Has been authorized to conduct data link communications by the State of the Operator's CAA;

b) Is eligible for data link communications operations in the U.S. NAS; and

c) Understands the Data Comm boiler plate OpSpec A003 limitations (i.e., the difference in the U.S. domestic airspace requirements between CPDLC-DCL and en route data communications services).

NOTE: If the data link flight plan code applicable to U.S. domestic airspace requirements is not in Table 1 of OpSpec A003, then a request for the addition must be made to AFS-52 who, with AFS-400 SME concurrence, will coordinate the addition with the Air Transportation Division (AFS-200).

18) Data Link System Flight Plan Codes and U.S. Domestic Airspace.

a) Air traffic issues a departure clearance in U.S. domestic airspace via CPDLC based on the operator filing one or both of the following equipment codes in field 10a of the ICAO flight plan:

- J3.
- J4.
- J3 and J4.

b) J3 stands for CPDLC FANS 1/A. J4 stands for CPDLC FANS 1/A very high frequency (VHF) data link (VDL) Mode 2. In ICAO Doc 10037, Global Operational Data Link (GOLD) Manual, PIs and operators will find FANS and Aeronautical Telecommunications Network (ATN) product availability by aircraft M/M/S. For example:

1. For Airbus A350, product availability is FANS A +B as FANS 1/A- ATN B1. FANS A +B is marketing terminology used by Airbus. FANS 1/A- ATN B1 is the internationally acceptable terminology used for air traffic management (refer to ICAO Doc 4444, page A2-6).

2. For Boeing 747-8, product availability is FANS 2 as FANS 1+ and ATN B1. FANS 2 is marketing terminology used by Boeing. FANS 1+ and ATN B1 are the internationally acceptable terminology used for air traffic management (refer to ICAO Doc 4444, page A2-6).

c) Once en route data communication is available in U.S. domestic airspace, the same J codes as those for CPDLC-DCL will be suitable for U.S. data communication en route.

19) CPDLC and Push to Load Requirement. What "push to load" means is the ability of the flightcrew, when they get a clearance sent to their flight management system (FMS), to press a button on their FMS/avionics system that with the press of that button will load the clearance into the FMS/avionics system. If the FMS/avionics system does not have push-to-load capability, then the flightcrew would need to manually enter the clearance. Currently, there is no ICAO flight plan code to identify to air traffic that the operator's FMS has

UNCONTROLLED COPY WHEN DOWNLOADED
Check with FSIMS to verify current version before using

push-to-load capability (sometimes referred to as automation). The FAA has made push to load a requirement for the following CPDLC message sets into the FMS: UM79, UM80, and UM83, as it eliminates typing errors and, as such, enhances safety. Operators whose FMS/avionics do not have push to load should contact their FMS/avionics equipment OEM to see if push to load is available for their FMS/avionics equipment.

20) CPDLC Flight Plan Designators/Codes.

a) The filing of all of the applicable flight plan codes is the responsibility of the operator. Operators must enter all applicable Data Comm codes in field 10a of the ICAO flight plan for their entire route. Reason: those flight plan codes will determine the routing from point of departure to destination. For example: If an operator wanted to fly from Boston's Logan airport (U.S.) to Paris' Charles De Gaulle airport (France) in a Boeing 747-8 (for which FANS 2 as FANS 1+ and ATN B1 was installed and the operator was approved by the State of the Operator for data link) over the North Atlantic (NAT) track, then in field 10a of the ICAO flight plan the operator would list:

1. J1 for the ATN B1. J1 would be a flight plan code used for data link communications in Europe.

2. J3 and/or J4 as appropriate for FANS 1+. J3 and J4 are the flight plan codes used for data link communications in U.S. domestic, presently CPDLC-DCL and later U.S. domestic en route. For additional guidance on VDL Mode 0/A as it relates to U.S. domestic en route, refer to AC 90-117.

NOTE: Although an aircraft may be able to send a CPDLC (text) message to air traffic while sitting on the ground at a U.S. domestic airport via satellite communications (SATCOM), the U.S. air traffic controller will not be able to send a message back to the aircraft via SATCOM. Currently, SATCOM is only available to air traffic centers who are tasked with separating traffic over the ocean.

3. The appropriate combination of J2 (CPDLC FANS 1/A HFDL), J5 (CPDLC FANS 1/A SATCOM (Inmarsat)), J6 (CPDLC FANS 1/A SATCOM (MSAT)), J7 (CPDLC FANS 1/A SATCOM (Iridium)). J2, J5, J6, J7 would be the flight plan code(s) used for data link communications over the ocean between the United States and Europe when outside of range of VHF. When over water, in line of sight/ground radio range CPDLC data can be transmitted via FANS 1/A VDL Mode A (J3) and FANS VDL Mode 2 (J4).

b) The U.S. Aeronautical Information Publication (AIP) also makes reference to field 18 DAT in relation to CPDLC-DCL (refer to U.S. AIP, paragraph 30.3.2.5, page ENR 1.5-74). For details, refer to AC 90-117, Appendix D, Flight Planning.

C. Adding or Deleting an Aircraft. Inspectors must instruct a foreign air carrier wishing to add or delete an aircraft to its part 129 OpSpecs to submit a letter or electronic transmittal to its assigned FAA office. The air carrier should address the letter or email to its PI, as listed in OpSpec A001, requesting the aircraft addition or deletion. The PIs assigned to the

UNCONTROLLED COPY WHEN DOWNLOADED
Check with FSIMS to verify current version before using

foreign air carrier must obtain and review the following documents prior to adding an aircraft to the air carrier's OpSpecs:

1) A copy of the State of the Operator-issued OpSpecs/air carrier certificate or other document, reflecting that the proposed aircraft is authorized for the proposed type of operation by the State of the Operator.

2) If applicable, any aircraft lease (wet or dry) agreement or interchange arrangement. The lease agreement or interchange arrangement must address who is responsible for aircraft maintenance, operational control, flightcrew and cabin crew responsibility, etc. If no lease agreement or interchange arrangement is applicable, review the copies of documents showing ownership of the aircraft (see Volume 12, Chapter 2, Section 9).

3) Approvals of the State of the Operator and State of Registry relating to the aircraft maintenance programs. This paragraph and ICAO Annex 6 establish the requirement that the aircraft's airworthiness certification be in accordance with a comprehensive and detailed code of airworthiness. Coordinate with AFS-50 if either of the following applies:

- If the aircraft that the foreign air carrier wants to add to its operations to the United States is registered in a country (which may not be the State of the Operator) that is IASA CAT II (or has not been assessed by the FAA); or
- The airworthiness certificate for the aircraft that the foreign air carrier wants to add to its operations to the United States does not contain a statement that it is issued in accordance with ICAO Annex 8.

4) The following aircraft-specific documentation showing approval from the State of the Operator and State of Registry and/or compliance by the foreign air carrier, as applicable:

a) The Certificate of Airworthiness and registration issued by the State of Registry or the State of the Operator in the case of an existing Article 83 *bis* agreement (see Volume 12, Chapter 2, Section 9).

b) The Article 83 *bis* agreement (if the aircraft is subject to this agreement). Review the agreement and ensure agreement registration with ICAO.

c) Approval by the State of the Operator for the aircraft MEL, with the exceptions noted above in subparagraph A4).

d) Noise stage compliance for each applicable aircraft.

e) Documentation that flight deck door security requirements have been met in accordance with § 129.28.

f) Traffic Alert and Collision Avoidance System (TCAS)/Airborne Collision Avoidance Systems (ACAS) installation approval, including compliance with the required software version number for aircraft equipped with TCAS II.

UNCONTROLLED COPY WHEN DOWNLOADED
Check with FSIMS to verify current version before using

g) Aircraft configuration information showing the State of Registry and/or State of the Operator-approved aircraft configurations. PIs must select "All Cargo," "Passenger," "Combi," or "Pax and Cargo," based on the main cabin.

h) Each of the air carrier's required approvals from the State of the Operator's CAA for specific operations, such as RVSM, North Atlantic High Level Airspace (NAT HLA), CAT II, CAT III, instrument landing system (ILS)/precision runway monitor (PRM), Required Navigation Performance Authorization Required (RNP AR) or restricted CAT II/III approaches, Low Visibility Take-Off (LVTO) minima, land-and-hold-short operations (LAHSO), etc., to be authorized in the OpSpecs. Confirm that the air carrier has authorizations for Extended Operations (ETOPS), if appropriate. Some authorizations will require additional OpSpecs to be issued. For detailed guidance on Data Comm, see subparagraph B. If the PI already has documentation that the criteria used by the State of the Operator's CAA for a particular approval is acceptable to the FAA, then the criteria documentation does not need to be resubmitted unless:

- The State of the Operator's CAA changed the criteria;
- The State of the Operator's CAA uses different criteria for the aircraft the operator requested to operate to the United States; or
- The responsible PI is not in possession of documentation referencing the State of the Operator's CAA criteria that was already determined to be acceptable to the FAA.

i) Office of the Secretary of Transportation (OST) Form 6411, U.S. Foreign Air Carriers Certificate of Insurance Under 14 CFR Part 205. Refer to the "Maintain Operator Data—Insurance" area of WebOPSS for the foreign air carrier to verify that the air carrier's insurance company has filed a properly completed OST Form 6411 indicating that the additional aircraft have required insurance coverage.

1. If the foreign air carrier has an "Approved (Active)" policy with blanket coverage for all aircraft (i.e., the column labeled "Blanket" in the Insurance interface will indicate "True"), then additional aircraft added to the foreign air carrier will be covered.

NOTE: Blanket coverage policy is indicated by the insurance company designating "Operations conducted with all aircraft operated by the insured" in section 3 of OST Form 6411.

2. If the foreign air carrier does not have a blanket coverage policy, click on the policy number links listed in the "Policy Number" column for policies with "Approved (Active)" status (as listed in the "Status" column). Each link will provide details of the aircraft covered by that specific policy. Aircraft not identified as covered by an "Approved (Active)" policy must not be added to OpSpec A003.

3. If you have additional questions about insurance coverage, (e.g., no insurance information in WebOPSS for the operator), contact an insurance analyst in the Technical Programs Branch (AFS-260) by email at AFS-260-Insurance@faa.gov.

UNCONTROLLED COPY WHEN DOWNLOADED
Check with FSIMS to verify current version before using

4. Additional information, including a link to a copy of OST Form 6411, may be located at https://www.faa.gov/about/office_org/headquarters_offices/avs/offices/afx/afs/afs200/afs260/exemptions/.

j) A statement from the foreign air carrier that the aircraft meets the aircraft equipment requirements of ICAO Annex 6, Part I for airplanes or Part III for helicopters, as appropriate (refer to § 129.5(b)). The following exceptions apply:

1. A foreign air carrier whose aircraft does not meet the aircraft equipment requirements of ICAO Annex 6 must apply for and receive an exemption from the Administrator in accordance with 14 CFR part 11 before the aircraft can be added to the air carrier's OpSpecs.

2. When the FAA allows all U.S. air carriers or a class of U.S. air carriers to meet different safety standards in U.S. airspace, the FAA believes that ICAO Article 11 obligations permit the FAA to allow similarly situated carriers from ICAO Member States to operate in U.S. airspace under standards that do not make distinctions among the operators based on nationality. Per the Office of the Chief Counsel (AGC), "…when FAA rules allow U.S. air carriers to meet different standards, then the FAA can permit foreign air carriers to operate in the U.S. airspace either under the U.S. standards appropriate to the class of air carrier or under ICAO Annex 6 standards."

5) Aircraft-specific documentation for each U.S.-registered aircraft. Obtain and review the documentation to verify the following:

a) For U.S.-registered aircraft, approval of the aircraft maintenance program and MEL by the FAA is in accordance with part 129.

NOTE: Documents that apply to multiple aircraft and have already been reviewed for another applicable aircraft already on the OpSpecs do not have to be reviewed again for subsequent aircraft (e.g., if all of the airplane types to be added are covered by a fleet MEL and another aircraft of the same type is added, the MEL does not need to be reviewed again). The option to review will rest with the responsible IFO. An instance when it would be advisable to review the records would be if the previously reviewed records are no longer available.

b) The air carrier has complied with supplemental inspection requirements for U.S.-registered aircraft in accordance with part 129, as applicable.

c) Digital flight data recorder (DFDR) installation is in accordance with part 129.

d) The air carrier has complied with special maintenance program requirements in accordance with part 129, as applicable.

D. Environmental Assessments (EA). The lower the noise stage of an aircraft, the louder/higher the aircraft noise will be (e.g., noise stage III aircraft is louder than noise stage IV aircraft). If the operator is proposing to add new aircraft that is noisier than the aircraft already listed on the OpSpec, then:

UNCONTROLLED COPY WHEN DOWNLOADED
Check with FSIMS to verify current version before using

- See Volume 11 for guidance on EAs; and
- For a checklist of the information needed by the General Aviation Operations Branch (AFS-830) for an environmental review, refer to the document in WebOPSS for OpSpec A003 by clicking the "Guidance" button and locating the document in the pop-up window titled, "OpSpecs Environmental Reviews."

E. Automatic Dependent Surveillance-Broadcast (ADS-B). On January 1, 2020, all aircraft operating in U.S. airspace must comply with §§ 91.225 and 91.227 with regard to ADS-B Out equipment. The airspace where ADS-B Out will be required includes (in general) all airspace above 10,000 feet mean sea level (MSL) and all Class B and C airspace. In August 2015, the FAA issued Exemption 12555 at the request of Airlines for America (A4A). The exemption acknowledges that many transport category aircraft currently utilize Global Positioning System (GPS) navigation equipment that does not meet the accuracy requirements detailed in § 91.227. In addition, this equipment may not be commercially available before the requirement takes effect. This exemption is available to all operators and will permit ADS-B equipped aircraft to operate in U.S. airspace using navigation equipment which does not meet the accuracy requirements detailed in § 91.227. Additional information concerning the exemption is available in Notice N 8900.418, Exemption 12555 Notification and Implementation Process, and Information for Operators (InFO) 16003, Exemption 12555 Process. For additional information concerning the FAA's plans for ADS-B Out implementation, refer to http://www.faa.gov/nextgen/programs/adsb.

F. Limitations. The PI must select only the applicable limitations to the foreign air carrier's operations.

OPSPEC A004—SUMMARY OF SPECIAL AUTHORIZATIONS AND LIMITATIONS (Required for All Air Carriers).

A. Purpose. This OpSpec summarizes optional authorizations applicable to the foreign air carrier that have been issued by OpSpecs. This OpSpec also summarizes limitations and restrictions that apply to the foreign air carrier's operations within the United States. Although this OpSpec is completed automatically by the automated Operations Safety System (OPSS) when related OpSpec paragraphs are moved into the workspace, PIs can use this OpSpec as a checklist in selecting other optional OpSpecs for issuance in the OPSS.

B. Procedure. Optional OpSpecs can be selected in the workspace by checking the blocks for the associated authorizations, limitations, or restrictions. These optional OpSpecs will then be generated in the workspace.

OPSPEC A005—EXEMPTIONS AND DEVIATIONS (OPTIONAL).

A. General. Both exemptions and deviations may be authorized for a foreign air carrier. In order for a foreign air carrier to conduct operations under the provisions of any exemption or deviation, OpSpec A005 must be issued and list the exemption or deviation. Volume 3, Chapter 2 contains the process for application and approval of exemptions or deviations.

UNCONTROLLED COPY WHEN DOWNLOADED
Check with FSIMS to verify current version before using

B. Exemptions. In the left navigation area, under "CHDO," "Maintain Operator Data," "Exemptions," enter the current exemption number and expiration date. List the exemption numbers in numerical order. In the space labeled "Remark" (referencing each exemption), enter a brief description of the exemption or, if appropriate, the exempted regulations. If another OpSpec specifies certain conditions or limitations related to the exemption, enter the reference number of the other OpSpec in this space. Coordinate all exemptions with AFS-50 prior to authorization in the foreign air carrier's OpSpecs.

C. Deviations. All deviations must be first selected in the OPSS in the left navigation area, under "CHDO," "Maintain Operator Data," "Deviations." Enter the applicable 14 CFR sections to which a deviation has been granted in paragraph "b" of OpSpec A005. List the deviations in numerical order by 14 CFR section. In the space labeled "Remarks and/or References" (adjacent to each deviation), briefly describe the provisions of the deviation or indicate a reference number for the standard OpSpecs paragraph that authorizes the deviation. Coordinate all deviations with AFS-50 prior to authorization in the foreign air carrier's OpSpecs.

OPSPEC A006—FOREIGN AIR CARRIER'S PERSONNEL, DESIGNATED AGENT, AND OTHER PERSONS (Required for All Air Carriers).

A. General. This OpSpec identifies the following individuals: the foreign air carrier's management personnel, personnel designated to officially apply for and receive OpSpecs, the agent for service, and the responsible government official.

B. Instructions for the Information Fields. The following provides direction for the information fields, which must be added to this paragraph.

1) Management Personnel.

a) Air carrier management information must be first entered into the Web-based Operations Safety System (WebOPSS) in the left navigation area under "CHDO," "Maintain Operator Data," "Personnel." If designated by the operator, the names of the Director of Maintenance (DOM), Director of Operations (DO), Director of Quality Assurance, Director of Safety (DOS), and chief pilot should be entered. If foreign equivalent titles that fulfill similar responsibilities are used, select (in the "FAA Recognized Position Title") the title default of "(Not Applicable)" and enter the equivalent title in the "Equivalent Position Title." The box for "Management Personnel (A006)" should also be checked. Once that is accomplished, moving the template from "available" to "workspace" will cause the information to be loaded automatically into the table in subparagraph a of the OpSpec. The telephone, fax, and email will need to be loaded manually into A006 (once template A006 is in "workspace").

b) A foreign air carrier's management personnel may have titles significantly different from titles of management positions used in 14 CFR parts 121 and 135. In addition, under 14 CFR part 129 there is no regulatory requirement for foreign air carrier management personnel, nor is it within the FAA's authority to approve foreign air carrier management personnel.

c) The intent of OpSpec A006 is to clearly identify the air carrier's key management personnel who are fulfilling management positions in accordance with the air

UNCONTROLLED COPY WHEN DOWNLOADED
Check with FSIMS to verify current version before using

carrier's own requirements as well as any that are imposed by the State of Operator Civil Aviation Authority (CAA).

2) Operations Representative. OpSpec A006 subparagraph b should include the foreign air carrier's primary representative for all contacts regarding the foreign air carrier's OpSpecs and foreign air transportation operations within the United States. The name, address, title, telephone number, fax, and email of the operations representative will need to be typed in manually. Some foreign air carriers will have a management representative in the United States (for example, a manager of U.S. operations). If the air carrier does not have a management representative within the United States, enter information for the operations representative located outside the United States.

3) Agent for Service.

a) An agent for service is a person or company designated by the foreign air carrier upon whom all legal notices, processes and orders, decisions, and requirements of the Department of Transportation (DOT), the FAA, and the National Transportation Safety Board (NTSB) shall be served. Once any of these documents has been served upon the foreign air carrier's agent for service, the foreign air carrier cannot claim (legally) that it did not receive the documents. Title 49 of the United States Code (49 U.S.C.) § 46103(a) requires foreign air carriers to designate an agent for service.

b) Subparagraph c of the OpSpec should include the name, address, title, telephone number, fax, and email of the air carrier's agent for service. Agent for service information must be first entered into WebOPSS in the left navigation area under "CHDO," "Maintain Operator Data," "Personnel." The box for "Agent for Service" should be checked. If the agent for service is also designated by the air carrier as authorized to apply for and receive OpSpecs, then the "Other Designated Persons (A007)" box also needs to be checked (see subparagraph B4) for more details). Once that is accomplished, moving the template from "available" to "workspace" will cause the "Name," "Address," and "Title" information to be loaded into the OpSpec automatically. The remaining contact information will need to be manually entered into OpSpec A006.

4) Personnel Designated to Apply for and Receive OpSpecs. Subparagraph d of the OpSpec should include the name, title, and parts authorized of persons designated by the air carrier as authorized to apply for and receive OpSpecs. Persons signing the OpSpecs must be first entered into WebOPSS in the left navigation area under "CHDO," "Maintain Operator Data," "Personnel." The "Other Designated Persons (A007)" box for personnel type should be checked. Also, check the boxes for the OpSpecs parts for which the designated person is responsible. Once that is accomplished, moving the template from "available" to "workspace" will cause the information to be loaded into the OpSpec automatically.

5) Responsible State Government Official. Subparagraph e of the OpSpec should include the name, address, title, telephone number, fax, and email of the foreign CAA official responsible for issuing the air operator certificate (AOC) and for ensuring continuing oversight of the foreign air carrier. The name, address, title, telephone number, fax, and email of the

UNCONTROLLED COPY WHEN DOWNLOADED
Check with FSIMS to verify current version before using

responsible State Government official will need to be typed in manually into subparagraph e of the OpSpec.

C. Safety Alerts for Operators (SAFO) and Information for Operators (InFO). Operators may go to the FAA website (www.faa.gov) to subscribe to SAFOs and InFOs. Once on the website, operators must provide their email address to subscribe. Operators have the primary responsibility for obtaining SAFOs and InFOs. Principal inspectors (PI) should not take on this primary role. PIs are encouraged to advise their foreign air carriers and foreign persons of SAFO and InFO subscription availability.

OPSPEC A007. DECOMMISSIONED.

OPSPEC A008—OPERATIONAL CONTROL, AERONAUTICAL WEATHER, AND AIRPORT AERONAUTICAL DATA (Required to be Issued Only for Part 129 Air Carriers from IASA Category 2 Countries).

A. General. Operational control, aeronautical weather, and airport data is a requirement for all operators under International Civil Aviation Organization (ICAO) Annex 6. When the FAA determines, under the international aviation safety assessment program (IASA), that the State of Operator does not oversee civil aviation safety in accordance with minimum international standards, then the FAA puts additional OpSpec requirements on foreign air carriers issued an air operator certificate (AOC) by these countries. The FAA does not require that operational control, aeronautical weather, and airport data be captured for foreign air carriers assessed under the IASA as being from a Category 1 country because the FAA has determined that the State of Operator oversees civil aviation safety in accordance with minimum international standards.

B. Purpose. The purpose is to ensure that each 14 CFR part 129 foreign air carrier, under the oversight of an IASA Category 2 country, is operating within the United States in accordance with the ICAO Annex 6 standards for operational control, aeronautical weather and airport data, and that those requirements are:

1) Contained in the manual required by ICAO Annex 6 (Part I, paragraph 4.2.3 for airplanes, and Part III, paragraph 2.2.3 for helicopters) that has been accepted or approved by the foreign air carrier's State Civil Aviation Authority (CAA); and

2) Described or referenced in the OpSpec, preferably by the manual or sections of an air carrier's manual. When an air carrier's manual does not adequately describe the system or procedures used, a narrative description combined with references will be provided by the operator and entered in the OpSpec. The narrative description should be brief. It should provide sufficient information so that the FAA and the air carrier have the same understanding about the system or procedures used by the air carrier. The foreign air carrier shall inform their assigned FAA principal inspectors (PI) as listed in A001 of any changes when they occur.

C. Operational Control. Operational control may be provided by a dispatch organization or method of flight supervision. Operational control is defined by ICAO as "the exercise of authority over the initiation, continuation, diversion, or termination of a flight in the interest of the safety of the aircraft and the regularity and efficiency of the flight." The

UNCONTROLLED COPY WHEN DOWNLOADED
Check with FSIMS to verify current version before using

description of the systems or procedures for controlling flight movement as described in the air carrier's manual and referenced or described in the OpSpecs should include the following types of information, as appropriate to the kind of operation:

- Methods and procedures for initiating, diverting, and terminating flights.
- Persons or duty positions authorized to, and responsible for, exercise of operational control.
- Facilities and location of facilities used by the air carrier in the exercise of operational control.
- Communication systems and procedures used by the air carrier.
- Special coordination methods and/or procedures used by the air carrier to assure the aircraft is Airworthy.
- Emergency notification procedures.

NOTE: A method of control and supervision of flight operations is covered in ICAO Annex 6, Part I, paragraph 4.2.1.3 for airplanes, and Part III, paragraph 2.2.1.3 for helicopters.

D. Aeronautical Weather Data. The operator needs to have a system of obtaining and disseminating weather data (ICAO Annex 6, Part I, paragraph 4.3.5 for airplanes, and Part III, paragraph 2.3.5 for helicopters) so that prior to takeoff the operator has a means of determining that:

1) A flight that is to be conducted under visual flight rules (VFR) can remain under VFR; and

2) A flight that is to be conducted under instrument flight rules (IFR) has the weather minimums necessary to make a landing at the destination airport or, if required, the alternate airport. At least one destination alternate (if required), at the estimated time of arrival (ETA), must have the weather at or above the airport operating minimums.

E. Airport Aeronautical Data. The data required in accordance with ICAO Annex 6 is at least the following types of airport aeronautical data:

1) Current Aeronautical Guides and Charts. Information relating to communication facilities, Navigational Aids (NAVAID), aerodromes, and other such information may be found in ICAO Annex 6, Part I, paragraph 6.2.3, and ICAO Annex 6, Appendices 2 and 6.

2) Minimum Flight Altitudes. The method for determining minimum flight altitudes for each route to be flown (ICAO Annex 6, Part I, paragraph 4.2.7).

3) Aerodome Operating Minima. Aerodrome operating minima shall be applicable to the type of operation as specified in ICAO Annex 6, Part I, paragraph 4.2.8. Consideration shall be given in establishing such minima for the following:

UNCONTROLLED COPY WHEN DOWNLOADED
Check with FSIMS to verify current version before using

a) Airplane type, performance, and handling characteristics;

b) Flightcrew composition and experience;

c) Runways to be used;

d) Adequacy and performance of the available visual and non-visual ground aids;

e) Airplane navigation equipment to the type of operation; and

f) Obstacle clearance altitudes for landing, missed approach, and climb.

OPSPEC A009–A013. RESERVED.

OPSPEC A014. DECOMISSIONED.

OPSPEC A015–A022. RESERVED.

OPSPEC A023. DECOMISSIONED.

OPSPEC A024—AIR AMBULANCE OPERATIONS (OPTIONAL).

A. Purpose. The intent of OpSpec A024 is to promote the same understanding between the foreign air carrier and the FAA concerning the safe conduct of air ambulance operations within U.S. airspace.

B. Manual Requirements. The foreign air carrier should have air ambulance procedures in their foreign air carrier's State Civil Aviation Authority (CAA)-approved/accepted manual. While International Civil Aviation Organization (ICAO) Annex 6 does not contain specific references to air ambulance operations, it does require that:

1) The operations manual required by ICAO Annex 6, Part I, paragraph 4.2 and Appendix 2 contain:

- Instructions outlining the responsibilities of operations personnel pertaining to the conduct of flight operations, and
- Checklists of emergency and safety equipment and instructions for its use.

2) An operator shall ensure that all operations personnel are properly instructed in their particular duties and responsibilities and the relationship of such duties to the operation as a whole, as required by ICAO Annex 6, Part I, paragraph 4.2.3.

C. Training. The foreign air carrier should ensure that all crewmembers have been trained in air ambulance procedures in accordance with a training program approved by the foreign air carrier's State CAA. While ICAO Annex 6 does not contain specific references to air ambulance training, ICAO Annex 6, Part I, paragraphs 9.3 and 12.4 require that an operator establish and maintain a ground and flight training program, approved by the State of Operator, which ensures that all flight and cabin crewmembers are adequately trained to perform their

UNCONTROLLED COPY WHEN DOWNLOADED
Check with FSIMS to verify current version before using

assigned duties. In addition, ICAO Annex 6, Part I, paragraph 4.2 and Appendix 2 require that all operations personnel are properly instructed in their particular duties and responsibilities and the relationship of such duties to the operation as a whole, and that instructions be contained in the operator's manual.

D. Prerequisites. Prior to issuing OpSpec A024, the inspector should review the appropriate documentation to ensure that:

1) The air carrier has procedures in its manual for air ambulance operations that its CAA has approved/accepted. Absent any guidance or requirements from the State of Operator, the air carrier may use the advisory information in the current editions of FAA Advisory Circular (AC) 135-15, Emergency Medical Service/Airplane (EMS/A), for airplanes, and/or AC 135-14, Emergency Medical Services/Helicopter (EMS/H), for helicopters. The foreign air carrier's air ambulance procedures should be consistent with those of a U.S. air carrier authorized to conduct similar air ambulance flights.

2) The carrier has air ambulance operations included in its approved crewmember training program. The minimum training should indicate that the pilot in command (PIC) (and the second in command (SIC) if appropriate) is trained in the same areas as required of all pilots and supplemented by training in any additional aircraft equipment, normal operating procedures, and emergency procedures specific to air ambulance operations. The inspector should also determine whether medical personnel participating in the flight are considered passengers or crewmembers in order to determine the extent of training required. Also, refer to AC 00-64, Air Medical Resource Management, current edition.

3) The carrier is authorized by an appropriate government agency within the State of Operator (CAA or other agency). This may be in the form of a letter, operating certificate, or other document. The inclusion of air ambulance procedures and training in required manuals may be sufficient to determine if the operator is authorized to conduct air ambulance operations since those procedures and training will have been approved/accepted by the State of Operator.

4) The installation of the medical equipment (or air ambulance required equipment) on the aircraft (the aircraft modification) has been approved by the State of Registry and the State of Operator.

E. System References. The system approved/accepted by the State of Operator for the foreign air carrier must be described or referenced in OpSpec A024. Referencing pertinent sections of the air carrier's manual or other documents that describe the system used by the air carrier should complete the paragraph. When a single manual or document does not adequately describe a system, it may be appropriate to provide an additional narrative description of the system in additional text to complete OpSpec A024. When a narrative description (or outline) is used, it should be brief but provide sufficient clarifying information, describing the complete system for air ambulance operations.

OPSPEC A025. RESERVED.

UNCONTROLLED COPY WHEN DOWNLOADED
Check with FSIMS to verify current version before using

OPSPEC A026—RESTRICTED OPERATION OF CERTAIN STAGE 2 AIRPLANES (OPTIONAL).

A. General. The intent of OpSpec A026 is to promote the same understanding between the foreign air carrier and the FAA concerning aircraft noise requirements and ensure that a foreign air carrier who operates Stage 2 aircraft to the United States is in compliance with the Airport Noise and Capacity Act (ANCA) of 1990. The ANCA prohibits the operation of civil subsonic turbojet Stage 2 airplanes over 75,000 pounds in the contiguous United States after December 31, 1999. On November 29, 1999, the President signed into law certain changes to the ANCA that affect operators of Stage 2 airplanes. These changes distinguish airplanes by type of certification and operation. The prohibition on revenue operations of Stage 2 airplanes after December 31, 1999, remains in effect.

B. Noise Requirements. The noise requirements were implemented in 14 CFR part 36 and 14 CFR part 91, §§ 91.801 through 91.877. In accordance with part 91, no foreign air carrier shall operate any aircraft to or from any airport in the contiguous United States, unless it complies with Stage 3 noise levels. Subparagraph a of OpSpec A026 reiterates this requirement. There are two exceptions to this requirement as follows:

1) Dual-Certificated Boeing 747 Airplanes. At the foreign air carrier's discretion, in order to comply with the noise requirements § 91.853, an operator of a Boeing 747 that is currently certificated for operation in either a Stage 2 or Stage 3 configuration (per the Aircraft Flight Manual (AFM)) may choose to limit the operation of that airplane to Stage 3 configuration only, to allow operation in the contiguous United States. These airplanes should be entered in subparagraph b of OpSpec A026, including make, model, and series (M/M/S), registration number, and serial number.

2) Other Stage 2 Airplanes. The foreign air carrier may choose to restrict their operation to operations solely outside the 48 Contiguous United States. Section 91.857 requires that this restriction be included in the carrier's OpSpecs. These airplanes should be entered in subparagraph c of OpSpec A026, including M/M/S, registration number, and serial number.

C. Additional Information. The law permits a range of nonrevenue Stage 2 operations. Any operator of a Stage 2 airplane over 75,000 pounds may operate in the contiguous United States for the following purposes:

1) To sell, lease, or scrap the airplane.

2) To obtain modifications to meet Stage 3 requirements. Operators moving a Stage 2 airplane to a location for Stage 3 modification must provide a copy of the modification contract to the FAA with the application for a Special Flight Authorization (SFA).

3) To obtain scheduled heavy maintenance or significant modifications. The FAA interprets "scheduled heavy maintenance" to mean a "C" or "D" check; "significant modifications" are those requiring special knowledge or equipment not readily available elsewhere or not practicable outside the United States.

4) To deliver the airplane to a lessee or return it to a lessor.

UNCONTROLLED COPY WHEN DOWNLOADED
Check with FSIMS to verify current version before using

5) To park or store the airplane.

6) To prepare the airplane for any of these events.

D. SFAs. The operator of a Stage 2 airplane that wishes to operate in the contiguous United States for any of the purposes listed above may apply to the FAA's Office of Environment and Energy (AEE) for a special authorization. The applications are due 30 days in advance of the planned flight and must provide the information necessary for the FAA to determine that the planned flight is within the limits prescribed in the law.

OPSPEC A027—LAND AND HOLD SHORT OPERATIONS (OPTIONAL).

A. General. This paragraph authorizes land-and-hold-short operations (LAHSO) for foreign air carriers operating under 14 CFR part 129, after requirements for operational policies, procedures, and training for LAHSO have been met. No air carrier may participate in LAHSO unless it has accomplished flightcrew training. The information contained in this subparagraph is critical to the safety of LAHSO and will be used in conjunction with FAA Air Traffic Order 7110.118, Land and Hold Short Operations, current edition.

B. Background. In 1997, the FAA expanded and replaced simultaneous operations on intersecting runways (SOIR) with LAHSO. SOIR, used since 1968, exclusively described simultaneous operations on two intersecting runways; either two aircraft landing simultaneously or one aircraft landing while another is taking off. LAHSO includes landing operations to hold short of an intersecting runway, taxiway, predetermined point, or an approach/departure flightpath. LAHSO, just as SOIR, is an air traffic control (ATC) tool used to increase airport capacity and maintain system efficiency and safety. In April 1999, the FAA, in coordination with industry, outlined changes in policy and procedures for conducting LAHSO. LAHSO procedures require both pilot and controller participation to balance the need for system efficiency and safety. These operations include landing and holding short of an intersecting runway, an intersecting taxiway, or some other predetermined point on the runway other than on a runway or taxiway.

C. Requirements. Foreign air carriers may not participate in LAHSO and the FAA will not issue OpSpec A027 unless the following conditions are met:

1) The appropriate Civil Aviation Authority (CAA) having oversight responsibility for the foreign air carrier has authorized the air carrier to conduct LAHSO.

2) The appropriate CAA certifies as to the completion of training and qualification of the flightcrew members to conduct LAHSO. The training and qualification of flightcrew members must be equivalent to that specified in OpSpec A027.

3) The appropriate Civil Aviation Authority (CAA) has certified the landing and stopping capabilities and airworthiness requirements of the airplanes that will conduct LAHSO. The airworthiness requirements and the landing and stopping capabilities of any airplane being operated in LAHSO by a foreign air carrier must be equivalent to that specified in FAA Air Traffic Order 7110.118.

UNCONTROLLED COPY WHEN DOWNLOADED
Check with FSIMS to verify current version before using

4) The part 129 carriers must be identified in the local Air Traffic Directives before they can participate in LAHSO.

5) The POI has received the necessary written documentation from the appropriate CAA certifying the successful accomplishment and completion of LAHSO policies, procedures, and operational requirements specified in this order and FAA Air Traffic Order 7110.118.

6) Foreign air carriers, in order to participate in LAHSO, must ensure that English-speaking flightcrews are at the controls of the aircraft when the LAHSO clearance is accepted.

D. Procedures. OpSpec A027, subparagraph c, must reference/describe the foreign air carrier's LAHSO procedures approved/accepted by the State of Operator. These procedures may be contained in any flightcrew member manual or document readily available to flightcrew members for reference. When possible, the OpSpec should be completed by referencing pertinent sections of the carrier's manual or other documents that describe the procedures used by the carrier. When an air carrier's manual does not adequately describe the procedures used, a narrative description combined with references may be necessary. When a narrative description is used, it should be brief but provide sufficient information so that the FAA and the carrier have the same understanding about the LAHSO procedures used by the carrier.

OPSPEC A028—AIRCRAFT WET LEASE AGREEMENTS (OPTIONAL).

A. Purpose. OpSpec A028 is required to be issued to any foreign air carrier conducting operations to the United States under any aircraft wet lease agreements approved by the U.S. Department of Transportation (DOT). OpSpec A028 is issued with the intent to promote the same understanding between two or more foreign air carriers and the FAA concerning their aircraft wet lease agreements. This paragraph provides general direction and guidance for processing and authorizing wet lease agreements in OpSpecs. Volume 12, Chapter 2, Section 9 contains complete information on wet lease agreements for foreign air carriers and should be reviewed prior to issuing OpSpec A028.

1) In the case of a wet lease between a U.S. air carrier and a foreign air carrier, the U.S. air carrier must have operational control. Information regarding DOT economic authority requirements and wet leases may be found at the following DOT website: https://www.transportation.gov/policy/aviation-policy/licensing/foreign-carriers. Some wet leases may be referred to as Aircraft, Crew, Maintenance, and Insurance (ACMI), which is a leasing arrangement whereby one airline (lessor) provides an aircraft, complete crew, maintenance, and insurance to another airline (lessee), which pays by hours operated. The lessee provides fuel and covers airport fees and any other duties, taxes, etc. These leases normally only take place between two International Civil Aviation Organization (ICAO) Member States. The lessor may operate them using the flight numbers of the lessee.

2) When a wet lease agreement is authorized, OpSpec A028 is issued to both the lessor and the lessee, except as otherwise allowed by this paragraph. Only those air carriers with FAA-issued OpSpecs receive OpSpec A028.

UNCONTROLLED COPY WHEN DOWNLOADED
Check with FSIMS to verify current version before using

3) If the foreign air carrier has more than one lease agreement, OpSpec A028 must authorize all such agreements.

4) Each aircraft shall also be entered in OpSpec A003 of the lessor's OpSpecs.

5) A determination must be made as to which air carrier has operational control. In the case of a U.S. air carrier, the U.S. air carrier must have operational control.

6) A U.S. air carrier may not wet lease from a foreign air carrier (see Volume 12, Chapter 2, Section 9).

B. Requirements and Definitions.

1) For the purposes of these OpSpecs, a wet lease is any leasing agreement, other than a code-sharing arrangement, whereby a lessor, such as an air carrier, provides an aircraft and at least one crewmember to another air carrier (the lessee) where one air carrier retains operational control. A wet lease requires that authorized officers of the two parties execute a written agreement between the lessor and the lessee. A copy of the lease agreement must be provided to the responsible International Field Office (IFO) along with the Statement of Authorization approved by the DOT. The wet lease must be reviewed by the U.S. air carrier's certificate-holding district office (CHDO) legal counsel when that air carrier is the lessor. A valid wet lease agreement must be in force for the DOT approval period as shown in the DOT Statement of Authorization. Further, the only wet lease agreements that should be listed in this paragraph are those wet lease agreement(s) that are documented and authorized by the DOT. The DOT-documented authorizations are in the form of an approved Statement of Authorization.

NOTE: The FAA requires operators conducting wet leasing operations to hold OpSpecs for the same kind of operation as that being conducted in order to ensure that the operator is qualified to conduct that kind of operation.

2) Before issuing OpSpec A028, principal inspectors (PI) will need to review the terms and conditions of the appropriate wet lease agreement. The wet lease agreement shall specify that the lessor has operational control and airworthiness responsibility (approved maintenance program and minimum equipment list (MEL)) and any associated procedures to be used during the wet lease operation. A valid wet lease agreement must be in force for the DOT approval period as shown in the DOT Statement of Authorization. OpSpec A028 shall be revised by removing authorization for any wet lease agreement at the expiration of the DOT approval period in the Statement of Authorization or at the expiration of the wet lease agreement (if not renewed and provided to the IFO), whichever occurs first. If renewal of the DOT authority has been requested prior to the expiration of the existing DOT authority, the wet lease can continue. Enter the phrase "DOT renewal applied for" in the box for the DOT order expiration date. Verification of DOT approval must be received.

NOTE: Any additional text added to the OpSpec makes the whole OpSpec nonstandard. Any additional text added to this OpSpec must be coordinated with the International Program Division (AFS-50) division manager.

UNCONTROLLED COPY WHEN DOWNLOADED
Check with FSIMS to verify current version before using

C. Paragraph Completion. Under a wet lease agreement, the lessor always maintains operational and airworthiness responsibility of the aircraft. If it is any other way, then it is not a wet lease. The purpose of the paragraph is to identify the airline with operational control and for whom the lessor is conducting flights. For example, Operator A, a 14 CFR part 121 air carrier, leased aircraft under the wet lease to Operator B, a 14 CFR part 129 air carrier. Operator A painted their aircraft to look exactly like an Operator B airplane, flew their routes, used their call sign, etc. From the FAA's perspective, this was an Operator A flight, so all of the rules that the flight operated under had to have been under part 121. This would also apply to a part 121 air carrier wet leasing to another part 121 air carrier. See the following for additional wet lease and paragraph completion information:

1) For a short-term wet lease (fewer than 60 calendar-days or a series of wet leases fewer than 60 calendar-days) between a U.S. air carrier and a foreign air carrier, with the U.S. air carrier operating flights from a foreign country to the United States, no Statement of Authorization for the wet lease is normally approved by the DOT. In this case, the wet lease is not documented in OpSpec A028 for either air carrier, even though the foreign air carrier may hold OpSpecs to serve the United States.

2) For a short-term wet lease (fewer than 60 calendar-days or a series of wet leases fewer than 60 calendar-days) between two foreign air carriers from the same country, a Statement of Authorization may or may not be issued by the DOT, dependent on the current bilateral air transport agreement. If the DOT does not approve a Statement of Authorization, then the wet lease will not be documented in OpSpec A028.

3) For additional details on how to document any long-term wet lease operation, see subparagraph A.

OPSPEC A029—AIRCRAFT INTERCHANGE ARRANGEMENTS (OPTIONAL). The intent of OpSpec A029 is to promote the same understanding between two or more air carriers and the FAA concerning their aircraft interchange arrangements. This paragraph provides general direction and guidance for processing and authorizing aircraft interchange arrangements in OpSpecs. Complete information on aircraft interchange arrangements to include definitions for foreign air carriers is contained in Volume 12, Chapter 2, Section 9 and Volume 3, Chapter 13, Section 5. (Additional definitions may be found in Volume 3, Chapter 13, Section 2.)

A. Discussion. An interchange arrangement is a form of a dry lease. An interchange arrangement permits one operator to connect two points using the same aircraft but each operator's crewmembers, thereby providing greater operational flexibility and utilization of transport category aircraft by the operators. When an aircraft interchange is authorized, OpSpec A029 is issued to the primary operator (as determined by the FAA) and the interchange operator (only to the interchange and primary operator that operates to the United States). For the purpose of this paragraph, the primary operator is the air carrier that would normally operate the aircraft if an interchange arrangement were not in effect. The primary operator always retains responsibility for the maintenance control of an aircraft that is the subject of an interchange arrangement. The interchange operator is the other party to an interchange arrangement. The interchange points are those airports where an aircraft may be transferred

UNCONTROLLED COPY WHEN DOWNLOADED
Check with FSIMS to verify current version before using

between the primary operator and the interchange operator. The transfer involves the replacement of the flightcrew of one operator with the flightcrew of the other operator.

B. Amending OpSpecs. The following scenarios will arise when amending the OpSpecs to document interchange arrangements involving foreign air carriers and operations to the United States:

1) If the primary operator under an interchange arrangement provides service to the United States, then the aircraft subject to the interchange will be identified in paragraph A029 of the primary operator's OpSpecs and included in the list of the primary operator's aircraft in paragraph A003 of its OpSpecs.

2) If the primary operator under an interchange arrangement does not provide service to the United States, then the interchange points must be located outside the United States. The FAA would not issue OpSpec A029 to the primary operator.

3) If the interchange operator provides service to the United States, then the aircraft subject to the interchange will be identified in paragraph A029 of the interchange operator's OpSpecs. If the interchange operator does not serve the United States, then the FAA would not issue OpSpec A029 to the interchange operator. The interchange points must be located outside the United States in that case.

4) When U.S.-registered aircraft are included under an interchange arrangement between two foreign air carriers, those aircraft must also be listed in paragraph D085 of the primary operator's OpSpecs.

C. Review Terms of the Interchange Arrangement. Before issuing OpSpec A029, principal inspectors (PI) must review the terms and conditions of the appropriate interchange arrangement. The interchange arrangement must specify the associated procedures to be used during the interchange operation. The agreement should ensure the following:

1) When the primary operator's flightcrew is operating the aircraft, the primary operator will be responsible for and maintain operational control of the aircraft. When the aircraft is under the operational control of the primary operator, the flightcrews and dispatch personnel of the primary operator will conduct the operation.

2) The interchange operator, when its flightcrews are operating the aircraft, is responsible for maintaining operational control of the aircraft. When the aircraft is under the operational control of the interchange operator, the flightcrews and dispatch personnel of the interchange operator will conduct the operation.

3) The primary operator is responsible for the maintenance control of the aircraft at all times and must ensure that all maintenance authorizations/special authorizations are in compliance.

D. Instructions for Information Fields for OpSpec A029. The following provides direction for the information fields, which must be added to OpSpec A029 in the columns provided:

UNCONTROLLED COPY WHEN DOWNLOADED
Check with FSIMS to verify current version before using

- Parties to the interchange arrangement—the name to include Doing Business As (DBA) if applicable of the primary and interchange operator;
- Aircraft make, model, and series (M/M/S);
- Manufacturer's aircraft serial number;
- Aircraft registration markings from the State of Registry; and
- The interchange points (airport name and International Civil Aviation Organization (ICAO) identifier) where operational control between air carriers will change.

NOTE: If the primary operator is a foreign air carrier that does not serve the United States then the interchange points must be located outside the United States. If the FAA downgrades the State of Operator of a foreign air carrier that is a party to an existing interchange arrangement from International Aviation Safety Assessment (IASA) Category 1 to IASA Category 2, then all interchange points must be frozen at those locations. PIs must also ensure that if the interchange operator from an interchange point outside the U.S. makes any stopovers while en route to the U.S. that that route be identified because in the event of a downgrade that route would likewise be frozen.

OPSPEC A030–A035. RESERVED.

OPSPECS A036 and A040. DECOMMISSIONED.

OPSPEC A041–A046. RESERVED.

OPSPEC A447—EMERGENCY AIRWORTHINESS DIRECTIVE NOTIFICATION FOR U.S.-REGISTERED AIRCRAFT (Required for All Carriers Operating U.S.-Registered Transport Category Aircraft).

A. Applicability. OpSpec A447 establishes emergency Airworthiness Directive (AD) notification and receipt requirements. The FAA will issue A447 to 14 CFR part 129 foreign air carriers and foreign operators operating U.S.-registered transport category aircraft. For additional guidance on processing 400-series templates, see Volume 3, Chapter 18, Section 2.

B. When an AD is Issued. The owner or operator of an aircraft is responsible for maintaining that aircraft in an Airworthy condition, as required by 14 CFR part 91, § 91.403(a). ADs are substantive regulations issued by the FAA in accordance with 14 CFR part 39 when an unsafe condition has been found to exist in particular aircraft, engines, propellers, or appliances installed on aircraft. ADs are also issued when that unsafe condition is likely to exist or develop in other aircraft, engines, propellers, or appliances of the same type design. Once an AD is issued, no person may operate a product to which the AD applies, except in accordance with the requirements of that AD. The principal operations inspector (POI), along with the principal avionics inspector (PAI) and the principal maintenance inspector (PMI), are responsible to see that an owner/operator complies with an AD, as applicable for the operations of any particular aircraft. More information may be found at http://www.faa.gov/aircraft/air_cert/continued_operation/ad/.

UNCONTROLLED COPY WHEN DOWNLOADED
Check with FSIMS to verify current version before using

C. Emergency ADs Require Immediate Action. The FAA Aircraft Certification Service (AIR) distributes emergency ADs that affect transport category aircraft by email. As such, all part 129 foreign air carriers and foreign operators operating U.S.-registered transport category aircraft are required to provide a designated person or organization, 24-hour telephone number, and 24-hour monitored email address for emergency AD notification. The FAA no longer uses Société International de Télécommunications Aéronautiques (SITA), ARINC, or Telex codes for electronic notification.

D. Confirmation of Emergency AD Receipt. Part 129 foreign air carriers and foreign operators operating U.S.-registered aircraft will confirm receipt of an emergency AD by replying to the emergency AD email message. This ensures the FAA that all operators affected by an emergency AD have been notified in time to comply with its requirements and avoid any undue safety risks. In the absence of a timely response by the operator to the email notification, the FAA will attempt to contact the operator by telephone.

E. Action. Principal inspectors should:

1) Review the completeness and accuracy of the Web-based Operations Safety System (WebOPSS) Maintain Operator Data > Airworthiness Directive Notification information for each assigned part 129 foreign air carrier and foreign operator operating U.S.-registered transport category aircraft. Select the row of the "Responsible Party" and click the "Edit" button to review/edit the AD notification form. This information will be used to populate OpSpec A447. A foreign air carrier/operator may assign several people and/or organizations to receive ADs; however, only one may be assigned as the responsible party. Check the "International" box. Populate and/or validate the required AD notification fields, including the "Responsible Party's E-mail Address." Emergency ADs will be sent to the responsible party's email address.

2) Populate OpSpec A447 and issue it to each assigned part 129 foreign air carrier or foreign operator operating U.S.-registered transport category aircraft. The certificate holder is not required to sign A447.

F. Historical ADs. ADs from the 1940s to the present are now available in electronic format for full-text searching in the FAA Regulatory and Guidance Library (RGL) at http://rgl.faa.gov or on the FAA's website at http://www.faa.gov/regulations_policies/airworthiness_directives/. A link is provided to subscribe (or modify a subscription) to receive, via email, ADs and Special Airworthiness Information Bulletins (SAIB). PIs may direct questions to AIR via phone at 405-954-4103, or email at rgl@faa.gov.

OPSPEC A570. DECOMISSIONED.

RESERVED. Paragraphs 12-126 through 12-176.

UNCONTROLLED COPY WHEN DOWNLOADED
Check with FSIMS to verify current version before using

VOLUME 13 FLIGHT STANDARDS DESIGNEES

CHAPTER 1 AIR TRANSPORTATION DESIGNATED EXAMINERS

Section 2 Managing Programs

Source Basis:

- **Section 183.1, Scope.**
- **Section 183.11, Selection.**
- **Section 183.13, Certification.**
- **Section 183.15, Duration of Certificates.**
- **Section 183.17, Reports.**
- **Section 183.23, Pilot Examiners.**
- **Section 183.25, Technical Personnel Examiners.**
- **Administrative.**

13-24 PROGRAM TRACKING AND REPORTING SUBSYSTEM (PTRS) ACTIVITY CODES. Operations: 1551, 1552, 1553, 1554, 1555, 1559, 1561, 1562, 1563, 1564, 1595, 1664, 1665, 1666, 1668, 1669, 1670, 1671, 1672, and 1673.

13-25 OBJECTIVE. This section provides specific inspector guidance on the selection, appointment, oversight, training, renewal, and termination of designees in the Aircrew Designated Examiner (ADE) program, including aircrew program designees (APD), as well as inspector guidance on certain aspects of the Training Center Evaluator (TCE) program and the Designated Aircraft Dispatch Examiner (DADE) program.

13-26 GENERAL.

A. Selection of Examiners.

1) This paragraph applies to the selection of examiners in the ADE program. Preferred sources for examiner candidates are:

- Airmen who are actively engaged in the activity for which examinations are to be conducted, and
- Retired or former inspectors.

2) Prior experience as a designated examiner or aviation safety inspector (ASI) may be considered to meet the examiner requirement for check pilot experience.

NOTE: Selection criteria for TCEs are located in Volume 3, Chapter 54, Section 2. Selection criteria for DADEs are located in Volume 13, Chapter 3.

B. Qualifications of APDs. Candidates must have the following qualifications:

1) A recommendation from the operator that includes a résumé of training and professional experience;

UNCONTROLLED COPY WHEN DOWNLOADED
Check with FSIMS to verify current version before using

2) A good record as a pilot and flight instructor and a good record of compliance with Title 14 of the Code of Federal Regulations (14 CFR) (isolated and unrelated violations or incidents are not disqualifying);

3) Approval as a check pilot for the operator in its 14 CFR part 121 or 135 training program;

4) A reputation for integrity and dependability in the industry and the community;

5) An Airline Transport Pilot (ATP) Certificate and applicable type rating for pilot examiners. Examiners authorized to conduct evaluations in aircraft must possess at least a third class medical certificate. A medical certificate is not required for simulator evaluators;

6) Successful completion of the operator's approved training program in which the candidate will be authorized to conduct evaluations for the issuance of certificates; and

7) Satisfactory completion of a formal ground school conducted by the Federal Aviation Administration (FAA) that includes the subjects contained in paragraph 13-33.

NOTE: See Volume 13, Chapter 2, Section 3 for more detail regarding APD qualifications. See Volume 3, Chapter 54, Section 2 for more detail regarding TCE qualifications.

C. Qualifications of Candidates Other Than Pilots. Examiner candidates who are not pilots must have the following qualifications:

1) Designated Flight Engineer Examiner (DFEE) candidates must have successfully completed the operator's approved training program in which the candidate will be authorized to conduct evaluations for the issuance of certificates, or the training program conducted by the training center and the appropriate training in the differences between the operator's approved training program and that of the training center;

2) DFEE and aircraft dispatcher examiner candidates must have satisfactorily completed a formal ground school conducted by the FAA that includes the subjects contained in paragraph 13-33;

3) Hold the appropriate airman certificate and rating(s), if applicable;

4) Status as a check Flight Engineer (FE) or dispatcher supervisor, as appropriate, in the operator's training program;

5) A recommendation from the operator that includes a résumé of training and professional experience; and

6) A good record of compliance with 14 CFR (isolated and unrelated violations or incidents are not disqualifying).

UNCONTROLLED COPY WHEN DOWNLOADED
Check with FSIMS to verify current version before using

D. Oversight. Effective oversight of designated examiners is founded on a strategy of risk management (RM) in which oversight by a certificate holder, as well as the FAA, includes a continual process of weighing the harm potential of any hazard against the likelihood of its occurrence, and taking appropriate preventive action. The FAA must allocate sufficient resources, including manpower and funds, to ensure effective management and efficient oversight of any designee. Flight Standards District Office (FSDO) and certificate management office (CMO) managers continually evaluate the effectiveness of their respective designee processes, and are responsible for prompt response and feedback to designees. Evaluations should be data-driven and based upon objective evidence, and any decisions must be documented.

13-27 DESIGNATED EXAMINERS ABROAD. An examiner may be designated to serve at locations outside of the United States, provided the designated examiner will examine only U.S. citizens or applicants trained under a training center's approved program, or individuals employed as flightcrew members of a part 121 or 135 air carrier and trained under that operator's approved training program. An FAA inspector must adequately supervise the designated examiner's activities. Principal operations inspectors (POI) may depend upon inspectors provided by International Field Offices (IFO) or by a Safety Assurance office for this supervision. A person who is not a U.S. citizen may be designated as an examiner abroad only when the need cannot be filled by a U.S. citizen and the individual has met the U.S. certification requirements for the examining authority requested.

13-28 PREREQUISITES AND COORDINATION REQUIREMENTS.

A. Prerequisites. This task requires knowledge of applicable 14 CFR parts 61, 63, 65, 91, 121, 135, 142, and 183 regulations and FAA policies, and qualification as an ASI (Operations) with designee oversight responsibilities.

B. Coordination. This task may require coordination between the managing FAA office, and/or the Air Transportation Division.

13-29 REFERENCES, FORMS, AND JOB AIDS.

A. References (current editions):

- Title 14 CFR Parts 1, 61, 63, 91, 121, 135, 142, and 183.
- Title 49 of the United States Code (49 U.S.C.).
- PTRS Procedures Manual (PPM).

B. Forms:

- FAA Form 8000-5, Certificate of Designation.
- FAA Form 8000-36, PTRS Data Sheet.
- FAA Form 8060-4, Temporary Airman Certificate.
- FAA Form 8060-5, Notice of Disapproval of Application.
- FAA Form 8430-9, Certificate of Authority.
- FAA Form 8710-6, Examiner Designation and Qualification Records.

UNCONTROLLED COPY WHEN DOWNLOADED
Check with FSIMS to verify current version before using

C. Job Aids. None.

13-30 DESIGNEE APPLICATION. Examiner candidates must submit the following before designation:

A. Qualifications. A completed statement of professional qualifications on FAA Form 8710-6. The specialist will review the candidate's qualifications to ensure that the candidate meets the requirements and standards for an examiner designation.

B. Certificate of Authority (COA). A copy of a completed and current FAA Form 8430-9 (see Figure 13-2, FAA Form 8430-9, Certificate of Authority), if the candidate currently holds an examiner designation(s) and examiner letters of authority (LOA) issued to the candidate.

C. Letters of Approval. Copies of any current check pilot or check FE letters of approval issued to the candidate.

13-31 PROCESSING INITIAL EXAMINER DESIGNATIONS. Specialists will ensure that all the requirements for an examiner designation have been met and will prepare the necessary paperwork as follows:

A. PTRS Codes (Part 183):

- 1551—Pilot Examiner—Large/Turbine (Airline Transport Pilot Examiner (ATPE)/Designated Pilot Examiner (DPE)).
- 1552—Pilot Examiner—Other (DPE).
- 1553—Pilot Proficiency Examiner (PPE).
- 1555—Aircraft Dispatcher.
- 1559—TCE.
- 1561—Flight Engineer Examiner (FEE).
- 1562—APD.

B. FAA Form 8710-6. After the examiner applicant has completed and signed the front of FAA Form 8710-6, the specialist will complete the form as follows:

1) On the back of the form under the block labeled "Additional Qualifications," enter the certificates, ratings, and aircraft type, as applicable, for which the designated examiner is authorized to conduct certification tests.

2) Check both sides of the form for accuracy and completeness.

3) Enter the type of designation, "APD/DFEE" or "TCE," followed by the certificate and airplane type in the space labeled, "Type of Designation," below the district office/CMO action block (e.g., ATP/AMEL B-727).

UNCONTROLLED COPY WHEN DOWNLOADED
Check with FSIMS to verify current version before using

4) Enter the designated examiner's Airman Certificate number and designation identification in the space labeled, "Certificate of Authority Issued" in the space titled "No." If the examiner candidate is to be an APD for an air carrier, use the designator for that air carrier. If the candidate is to be a TCE, use the designator for the training center.

5) Enter the expiration date, which is normally the last day of the month in the following year corresponding to the month of designation. Special circumstances may call for an earlier expiration date.

6) Enter the applicable FSDO in the "DO to Serve Under" block.

7) Sign the "Inspector's Signature" block.

C. Examiner Designation Numbers. For APDs and TCEs, the airman's certificate number, coupled with the applicable four-character air carrier or training center designator, may be used in all instances when an examiner designation number may be called for. If the examiner candidate is to be an APD for an air carrier, use the designator for that air carrier. If the candidate is to be a TCE, use the designator for the training center (e.g., an APD for Delta Air Lines, Inc. (DALA) would be 123456789DALA).

D. Other Forms. Specialists will prepare FAA Form 8000-5 (see Figure 13-3, FAA Form 8000-5, Certificate of Designation), and FAA Form 8430-9 (see Figure 13-2). The originals of these forms will be issued to the designated examiner. Copies will be retained in the appropriate designee file.

E. Approval Authority. The office manager, POI, Training Center Program Manager (TCPM), or an inspector authorized to act for these individuals will indicate approval of each examiner candidate by completing the first line of the district office/CMO action block on FAA Form 8710-6, and by signing the LOA and the appropriate spaces on FAA Forms 8710-6, 8430-9, and 8000-5.

F. LOA. The inspector approving the candidate's designation as an examiner will prepare the LOA. The LOA serves two purposes:

- It specifies the exact authority conveyed to the examiner by the designation, which may not be possible to include on FAA Form 8430-9 due to space limitations; and
- It provides a record of approval and a basis for subsequent amendment and dissemination of information to affected FAA offices, which may be transmitted via email.

13-32 DESIGNEE FILE. The managing Flight Standards office must maintain a file on each of its designees. The records may be maintained electronically if the electronic recordkeeping system meets the requirements of the current edition of FAA Order 1350.14, Records Management, and the FAA Records Management Manual. The file must comply with Order 1350.14, and for standardization must contain the following information:

UNCONTROLLED COPY WHEN DOWNLOADED
Check with FSIMS to verify current version before using

NOTE: If any of these items are unavailable, the FAA office should include a written notation to that effect in the designee file.

- FAA Form 8000-5, Certificate of Designation, for the most recent designation;
- FAA Form 8430-9, Certificate of Authority, for the most recent designation;
- FAA Form 8710-6, Examiner Designation and Qualification Record, for the original designation and the most recent renewal;
- Violations history, if any, available from the Enforcement Information System (EIS);
- Records of surveillance/inspection of the designee (e.g., copy of PTRS record); and
- Records of discussion or counseling.

NOTE: Electronic FAA records which may be accessed through the FAA's electronic records systems (e.g., PTRS, Safety Performance Analysis System (SPAS), Enhanced Flight Standards Automation System (eFSAS), and enhanced Vital Information Database (eVID) need not be duplicated and maintained in the designee's file folder. However, it should be noted that PTRS alone does not retain records to meet this requirement in full.

13-33 EXAMINER CANDIDATE TRAINING AND OBSERVATION. The specialist will ensure that examiner candidates are trained and observed in their functions prior to designation. TCEs must complete the employing center's approved instructor and TCE training as well as the training described in this section.

A. Candidate Training. Examiner candidates must be trained in certification policies, procedures, and standards. The specialist must ensure that the candidate is trained in the following specific areas:

1) The knowledge, abilities, and skill requirements for the original issuance of the certificate and added ratings, as applicable;

2) The procedures, methods, and techniques associated with administering the required certification tests;

3) Examiner responsibilities, authority, and limitations under 14 CFR and applicable FAA orders;

4) The use of FAA forms and job aids associated with the particular examiner function; and

5) Administrative procedures and relationships with supervisory inspectors.

NOTE: See Volume 13, Chapter 3 for DADE training requirements. See Volume 3, Chapter 54 for TCE training requirements.

B. Representing the FAA. Inspectors will stress to examiner candidates that in performing the functions of an examiner, they are representatives of the Administrator. Candidates must understand that matters such as company loyalties, economic conditions, union affiliations, and seniority are not relevant to the certification of airmen.

UNCONTROLLED COPY WHEN DOWNLOADED
Check with FSIMS to verify current version before using

C. FAA Observation of the Candidate. After the examiner candidate has been trained, a qualified inspector will observe the examiner candidate conducting a complete certification test consisting of oral, simulator, and aircraft portions (or practical evaluation), as applicable. The following methods of observation may be used, in descending order of preference:

1) Actual Certification Evaluation. The preferred method is that the inspector observes an examiner conducting all portions of an actual certification test.

2) Simulated Certification Evaluation. When circumstances make the observation of an actual certification test impractical, inspectors may observe the examiner candidate conducting a competency or proficiency check as if the check were being conducted for certification.

3) Other Methods. Other methods, such as the inspector acting as the applicant, may be used when the preferred methods are not practical.

NOTE: The requirements for valid TCE observations are clarified and explained further in Volume 3, Chapter 54, Section 2, which supersedes the requirements for observation noted in this section.

D. Recording Examiner Training. Specialists who conduct training for an examiner candidate will complete FAA Form 8000-36, using activity code 1586 for each TCE candidate trained and 1595 for each other examiner candidate trained. The inspector will use FAA Form 8000-36, Section IV and J783, to identify the type of training activities that are conducted.

13-34 OVERSIGHT AND SUPPORT OF DESIGNATED EXAMINERS. Specialists are responsible for the oversight and support of designated examiners. However, any FAA employee working with the designee has the responsibility to provide input to the specialist on the performance of the designee. The following guidance applies:

A. Meeting with Examiners. Specialists will ensure competent performance by each designated examiner in respect to handling of applicants, maintenance of desired test standards, and accurate completion and processing of certification paperwork. Designated examiners should be encouraged to contact their specialists to resolve questions or difficulties. Sufficient contact is essential and will include regular and special meetings and annual briefings, as follows:

1) Regular Safety Standardization Meetings. Specialists will conduct regularly scheduled meetings, at least annually, with designated examiners for the purpose of maintaining desirable standards and effective working relationships. These meetings will be recorded in the PTRS.

2) Special Safety Standardization Meetings. Specialists will call special meetings whenever a significant change affects the process of FAA airman certification in respect to air transportation examiners.

UNCONTROLLED COPY WHEN DOWNLOADED
Check with FSIMS to verify current version before using

3) Annual FAA Briefing of Examiner. Each designated examiner must attend an annual briefing, conducted by a specialist, that specifically addresses the functions of a designated examiner. This briefing may be accomplished in conjunction with a safety standardization meeting, but must be accomplished as a condition of renewal.

B. Examiner Supplies and Materials. Specialists will ensure that each designated examiner has access to the materials necessary for the examiner's tasks. The following materials will be made available before designation of any candidate, and revisions to the materials will be made readily accessible to the designee thereafter:

- Volume 3, Chapter 20;
- Volume 5;
- Appropriate Job Aids;
- FAA Form 8060-4;
- FAA Form 8060-5; and
- FAA Form 8000-36.

13-35 SHARED OVERSIGHT OF EXAMINERS. A check pilot may be designated as more than one type of designated examiner or as a designated examiner for more than one operator. In such a case, more than one inspector may supervise a designated examiner. The following guidance applies:

A. Supervisory Responsibilities. POIs and managers should delegate responsibility for supervising all of a designated examiner's activities to a single inspector when practical. It may be necessary, however, for the supervisory responsibility to be divided in accordance with the activities the designated examiner is authorized to perform. For example, a check pilot might be approved as an APD by authority of a FSDO in Florida; under that authority the examiner might conduct B747 type ratings for an operator whose certificate is held in that state. The same person might also be DPE for General Aviation (GA) by authority in Colorado. In such a case, the examiner would be supervised by an Aircrew Program Manager (APM) in Florida for B747 activities and by an appropriately rated inspector in Colorado for GA activities.

B. Responsibility for Maintaining Designee Files. An inspector must be assigned the responsibility for maintaining a particular designated examiner's file. When more than one FSDO is involved, a file should normally be maintained by each office for which the designated examiner performs air transportation functions.

C. Procedure for Granting Additional Examination Authority. The training and observations required for an examiner's second designation must be completed before the designated inspector can amend the examiner's FAA Form 8710-6, FAA Form 8000-5, FAA Form 8430-9, and LOA.

1) When the authority is requested for an examiner to be designated for a second operator, the examiner candidate must complete qualification as a check pilot for the second operator as a precondition of designation.

UNCONTROLLED COPY WHEN DOWNLOADED
Check with FSIMS to verify current version before using

2) The inspector tasked with performing any required observations of the designated examiner is responsible for notifying the inspector who maintains the designated examiner's file once the observations have been completed and the check pilot designation has been made for the second operator.

D. Expiration Date. All designations expire on the expiration date on FAA Form 8710-6, FAA Form 8430-9, and the LOA, which is normally the last day of the month in the following year corresponding to the month of designation. Title 14 CFR part 183 calls for a 1-year term to expiration. Special circumstances may call for an earlier expiration date, but not a later one.

13-36 AMENDMENT OF DESIGNATED EXAMINER DESIGNATIONS.

A. Authority. The manager responsible for maintaining a designated examiner's records file may amend an examiner's FAA Forms 8000-5, 8710-6, and 8430-9 and LOA at any appropriate time. An amendment is appropriate when any of the following elements of a designated examiner's certification authority is changed:

- Designation,
- Certificate,
- Aircraft type,
- Operator, or
- Training center.

B. Amendment Procedure. When an FAA Form 8000-5 is amended, the inspector must cancel any previously issued form by marking the words "CANCELED" across the face of the certificate and issue a new one. When FAA Form 8000-5 is amended to include more than one designation, FAA Form 8710-6 must also be amended. The specialist will enter an adequate description of each designation in the "Additional Qualifications Limitations" block. FAA Form 8430-9 will be changed as well to reflect the additional authorizations. When more than one FSDO or CMO is involved, the office supervising each activity must be listed on this certificate. The specialist will show the additional authorities and limitations on the LOA and forward copies to the affected offices.

C. Administrative Steps. The administrative steps for the issuance of an amended Certificate of Designation are the same as those outlined for initial designation. (See paragraph 13-31.)

UNCONTROLLED COPY WHEN DOWNLOADED
Check with FSIMS to verify current version before using

13-37 RENEWAL OF DESIGNATIONS.

A. PTRS Codes (Part 183):

- 1551—Pilot Examiner—Large/Turbine (ATPE/DPE).
- 1552—Pilot Examiner—Other (DPE).
- 1553—PPE.
- 1555—Aircraft Dispatcher.
- 1559—TCE.
- 1561—FEE.
- 1562—APD.

B. Need for Renewal. Before renewal, each managing Flight Standards office must determine that there is an ongoing need to renew the designation and that the office has the ability to continue managing the designee.

C. Expiration. An examiner designation expires no later than the last day of the month in the following year corresponding to the month of original issue or most recent renewal. The renewal process will normally be accomplished during the 2 months preceding or in the month that the designation will expire.

NOTE: An examiner designation issued on January 15, 2009, would expire on January 31, 2010. The renewal process would normally be conducted in the period from November through January, completing the process no later than the end of January.

D. Renewal Process. The examiner will not conduct any evaluations after the expiration date if he or she has not been renewed and issued a new FAA Form 8430-9. If the renewal process is not completed within 30 days following the expiration date, the examiner may be reinstated using the same process used for initial designation. At expiration, a designation does not continue in force. The inspector should ensure that the need for a designated examiner continues to exist before considering renewal. If conditions necessitating an examiner continue to exist, the examiner's designation is normally renewed in the month corresponding to the month of original issue or most recent renewal. Inspectors should use the following procedures:

1) Required Forms. The inspector assigned to the designated examiner will renew the designation after satisfactory completion of the required annual observation and required annual briefing. The following forms will be updated:

- A new FAA Form 8000-36. Initiate this form to record the renewal action after all actions have been completed.
- FAA Form 8430-9,
- FAA Form 8710-6, and
- LOA.

UNCONTROLLED COPY WHEN DOWNLOADED
Check with FSIMS to verify current version before using

2) Annual FAA Observation of Check.

a) PTRS codes (part 183):

- 1664—Pilot Examiner—Large/Turbine (ATPE/DPE).
- 1665—Pilot Examiner—Other (DPE).
- 1666—PPE.
- 1668—FEE.
- 1669—Aircraft Dispatcher.
- 1672—APD.
- 1673—TCE.

b) Within the 3 calendar-months before expiration, the examiner will be observed conducting a complete check. In the case of pilot examiners (e.g., APD, TCE), this evaluation will include observation of oral, simulator, and aircraft evaluation activities, as applicable. The observation will be conducted by the specialist, or by another appropriately rated inspector appointed by the specialist.

c) For renewal purposes, inspectors may observe designated examiners conducting the following activities, in descending order of preference:

- A certification check,
- A proficiency check, or
- A competency check.

NOTE: The requirements for valid TCE observations are clarified and explained further in Volume 3, Chapter 54, Section 2, which supersedes the requirements for observation noted in this section.

NOTE: If the necessary observations cannot be accomplished within the required timeframe, the inspector should evaluate the continued need for an evaluator, or if the opportunity exists to perform the observation early, then the renewal can take place early, by resetting the designee with a new expiration date.

d) Similarly, participation in a line observation program and demonstration of instructional proficiency need to be accomplished on only one of the operators. When an individual is authorized to evaluate personnel of more than one operator, the observations should be rotated among the operators' programs. On the other hand, an APD for the B747 who is concurrently a DPE for gliders needs at least two annual FAA observations, one in each activity.

e) The designated examiner is responsible for scheduling each required annual FAA observation and each annual briefing far enough in advance to ensure that they may be accomplished before expiration. A designated examiner who is beyond expiration may not conduct any certification activity on behalf of the Administrator until all annual requirements are met and the renewal has been completed.

UNCONTROLLED COPY WHEN DOWNLOADED
Check with FSIMS to verify current version before using

f) Each designated examiner must attend an annual briefing, conducted by an inspector, that specifically addresses the functions of a designated examiner. This briefing may be accomplished in conjunction with a safety standardization meeting. The briefing should cover the following:

- Designee's roles and responsibilities,
- Paperwork discrepancies,
- Applicable changes to 14 CFR,
- New FAA policy and procedures,
- Conduct of the practical test,
- Review and updating test scenarios,
- Feedback on approved training courses,
- Foreign student applicants, and
- Regional and national issues (trends, best practices, etc.).

13-38 PROCESSING DESIGNATED EXAMINER CERTIFICATION PAPERWORK. Part 183, § 183.17 requires that designated examiners make reports as prescribed by the Administrator. Designated examiners will forward airman certification paperwork to the designated FSDO for review, processing, and transmittal to the Airmen Certification Branch. When a multiple designation with more than one supervising office is involved, certification paperwork will be sent to the supervising office for each designation. This paperwork will only be submitted to, and processed by, the specified office; it may not be accepted by other offices.

A. Designated Examiner Responsibilities. Designated examiners must complete the airman certification paperwork in accordance with the requirements of Volume 13. The paperwork must be accurate, complete, and timely. Designated examiners must complete the PTRS datasheets for each test conducted. Satisfactory fulfillment of this responsibility is a requirement for renewed designation as an examiner.

B. Specialist Responsibilities. Specialists are responsible for training designated examiners on correct documentation. Specialists should provide the designated examiners with ample PTRS datasheets and should ensure that as much information as possible is overprinted on these forms. Inspectors may overprint forms or job aids in any convenient manner, such as by pen, pencil, or copy machine.

13-39 REVIEW OF DESIGNATED EXAMINER DECISIONS. If an airman is dissatisfied with a designated examiner's decision, the airman may appeal to the specialist for a retest. The airman must submit the appeal in writing and indicate the reasons for protesting the designated examiner's decision. The responsible inspector will review the matter and decide if retesting is appropriate. If the inspector grants a retest, a new application must be completed by the airman, and the entire test must be accomplished again with an FAA inspector.

UNCONTROLLED COPY WHEN DOWNLOADED
Check with FSIMS to verify current version before using

13-40 TERMINATION. Termination is the action by the FAA to not renew or to rescind a designee's authority at any time for any reason the Administrator considers appropriate.

NOTE: ASIs should keep in mind that a termination of designation may be appealed by the designee. Therefore, documentation relating to designee deficiencies or termination should be included in the designee's file.

A. Types of Termination. There are two types of designee termination:

1) Termination for cause is a negative finding based on a designee's performance. (See Figure 13-4, Sample Letter of Termination (For Cause).)

2) Termination not-for-cause can be for any reason not specific to a designee's performance (e.g., lack of need for the designee by the FAA office or voluntary surrender). (See Figure 13-5, Sample Letter of Termination (Not-for-Cause).)

B. Examples of Deficiencies. The following are examples of deficiencies in a designee's performance of duties:

1) Unsatisfactory performance in any phase of designee duties or responsibilities, including the inability to accept or carry out the managing FAA office's instructions;

2) Any actions by the designee that may reflect poorly on the FAA, such as misuse of the designation or failure to maintain a reputation for integrity and dependability in the industry and the community;

3) The inability of the designee to work constructively with the FAA office personnel or the public;

4) Evidence that the designee's general and/or professional qualifications and requirements were not met at the time of the original designation or at any time thereafter;

5) A designee's inability to demonstrate satisfactory performance during a knowledge and skill evaluation or during an initial or recurrent training seminar; or

6) A designee's failure to maintain, or inability to demonstrate, qualifications for any certificate, rating, or examiner designation held.

C. Documentation. The managing FAA office will document deficiencies in performance in the designee file. Any correspondence relating to the designee's deficiencies, including but not limited to corrective action taken or a record of additional training, should be included as well.

13-41 TERMINATION AND APPEAL PROCEDURES.

A. Decision to Terminate. Designations are terminated under the general conditions contained in 49 U.S.C. § 44702. The appointing FAA office manager makes the decision to terminate a designee. (See the examples of deficiencies cited in subparagraph 13-40B.)

UNCONTROLLED COPY WHEN DOWNLOADED
Check with FSIMS to verify current version before using

B. Notification. The FAA office manager's decision regarding the termination of a designation will be provided to the designee in writing, and the reasons cited will be as specific as possible. Upon notification of termination, the designee must immediately cease the exercise of his or her designee privileges.

C. Documentation. If the managing FAA office terminates a designation, the following actions must also take place:

1) The ASI will ensure that the eVID and/or the Designee Information Network (DIN) is updated and should notify any other FAA offices with jurisdictional oversight of other designations held by the individual; and

2) The designee file will be updated to reflect the appropriate designation status (e.g., termination, appeal pending, reinstatement).

D. Appeal of Termination.

1) The following types of terminations cannot be appealed:

- Termination based on lack of need or the inability of the FAA office to manage the designee,
- Termination based on the loss of a prerequisite certification,
- Termination based on the designee's failure to meet training requirements,
- Termination based on the fact that a designee is no longer employed by the air carrier/training center, or
- Termination based on the employing air carrier/training center's decision to no longer use an employee as an APD/TCE.

2) If the designee wishes to appeal his or her termination, the designee must make the request in writing within 14 calendar-days of receipt of the written notification of the FAA office manager's decision by sending a letter to the FAA office manager to request an appeal.

3) The FAA office manager will forward the appeal request to the Regulatory Support Division.

4) The Regulatory Support Division manager or delegate overseeing the appeal will convene an appeal panel composed of three members:

- A Regulatory Support Division representative;
- An Air Transportation Division representative; and
- A Flight Standards office manager not associated with the office that terminated the designee.

5) The appeal panel will review the termination decision and make a final decision within 45 calendar-days of the appeal.

6) The designee will be notified in writing of the appeal panel's decision within 15 calendar-days of the appeal panel's decision.

UNCONTROLLED COPY WHEN DOWNLOADED
Check with FSIMS to verify current version before using

NOTE: The appeal panel's decision is final.

7) All documentation (e.g., outcome, members of the appeal panel, communication with the designee or the Safety Assurance office) associated with the appeal must be forwarded to the managing FAA office for inclusion in the designee's file.

E. PTRS. The inspector closes the PTRS record. In addition to the standard PTRS code for termination (1565), one of the following key words should be entered in the "Comment" section to describe the reason for termination:

- 786—Voluntary [Not-for-Cause].
- 787—Involuntary-Need [Not-for-Cause].
- 788—Involuntary-Performance [For Cause].
- 789—Involuntary-Other [For Cause].

F. Update Designee File. After completion of this task, the specialist must update the designee file to include:

- A copy of the designee's documentation evidencing the voluntary surrender of the designation;
- Documentation of the termination of the designee's authority, including supporting documentation; or
- Documentation of the outcome of the designee's appeal to the appeal panel, including reinstatement, if applicable.

UNCONTROLLED COPY WHEN DOWNLOADED
Check with FSIMS to verify current version before using

Figure 13-2. FAA Form 8430-9, Certificate of Authority

DEPARTMENT OF TRANSPORTATION
FEDERAL AVIATION ADMINISTRATION
CERTIFICATE OF AUTHORITY

DESIGNATION NO.
SW-17-1234

NAME
Jim Little

DESIGNATION EXPIRES
9-94

Is authorized to act in the capacity of a
PE - Airplane

AT FIXED BASE OF OPERATION
Little Rock, Arkansas, District

DESIGNEE'S SIGNATURE

for the Administrator

09-23-93
(DATE)

Don Brown
(SIGNATURE)

FAA FORM 8430-9 (1-70)

The bearer has received all pertinent instructions and is authorized to act in the capacity set forth on this Certificate of Authority while under the supervision of the following district office or offices:

Office	Date	Inspector's signature
LIT FSDO	9-23-93	Don Brown
BTR FSDO	10-15-93	A. L. Jones

UNCONTROLLED COPY WHEN DOWNLOADED
Check with FSIMS to verify current version before using

Figure 13-3. FAA Form 8000-5, Certificate of Designation

U.S. Department of Transportation
Federal Aviation Administration

Certificate of Designation

Reposing special trust and confidence in the integrity, diligence, and discretion of

who has been found to have the necessary knowledge, skill, experience, interest, and impartial judgment to merit special public responsibility, I hereby designate as

with authorization to act in accordance with the regulations and procedures prescribed by the Federal Aviation Administration relating to this designation.

Issued at *By Direction of the Administrator*

Dated _____

Certificate No. _____

UNCONTROLLED COPY WHEN DOWNLOADED
Check with FSIMS to verify current version before using

Figure 13-4. Sample Letter of Termination (For Cause)

FAA Letterhead

CERTIFIED MAIL

[Date]
Designee Number: [designee's number]
[Designee's name and address]

Dear [Designee's Name]:

This letter is to inform you that your Federal Aviation Administration (FAA) designation as a [type of designee, e.g., DPE or TCE] is terminated pursuant to [14 CFR § 183.15(b)(4)/14 CFR § 183.15(b)(6)/49 U.S.C. § 44702(d)(2)]. [You must immediately cease exercising the privileges of your designation.] OR [Pursuant to our (telephone conference/meeting) on (date), you were to cease exercising the privileges of your designation on (date).]

Your designation is being terminated [for not performing your duties under your designation] OR [because you no longer meet the eligibility requirements for the designation]. [Cite the reference to the regulation(s)/policy that was violated/noncompliant.]

You may submit a request for appeal in writing to this office no later than 14 calendar-days from the date of receipt of this letter. At that time, you should include any evidence or statement concerning this matter with your written request for appeal. You will be notified of the outcome of the appeal within 60 calendar-days after our receipt of your written request for appeal.

Sincerely,

[Safety Assurance Office Manager/National Program Office Manager signature]

UNCONTROLLED COPY WHEN DOWNLOADED
Check with FSIMS to verify current version before using

Figure 13-5. Sample Letter of Termination (Not-for-Cause)

FAA Letterhead

CERTIFIED MAIL

[Date]
Designee Number: [designee's number]
[Designee's name and address]

Dear [Designee's Name]:

This letter is to inform you that your Federal Aviation Administration (FAA) designation as a [type of designee, for example DPE or TCE] is terminated pursuant to [14 CFR § 183.15(b)(1)/14 CFR § 183.15(b)(5)/49 U.S.C. § 44702(d)(2).] [You must immediately cease exercising the privileges of your designation.] OR [Pursuant to our (telephone conference/meeting) on (date), you were to cease exercising the privileges of your designation on (date).]

Your designation is being terminated because [you voluntarily surrendered your designation authority on (date)] OR [this office is no longer in need of your assistance].

This termination is not for cause and may not be appealed. We appreciate your service to the FAA.

Sincerely,

[Safety Assurance Office Manager/National Program Office Manager signature]

RESERVED. Paragraphs 13-42 through 13-53.

UNCONTROLLED COPY WHEN DOWNLOADED
Check with FSIMS to verify current version before using

VOLUME 13 FLIGHT STANDARDS DESIGNEES

CHAPTER 2 AIRCREW DESIGNATED EXAMINER PROGRAM

Section 3 Safety Assurance System: Aircrew Program Designees and Designated Flight Engineers in an Aircrew Designated Examiner Program

Source Basis:

- **Section 183.1, Scope.**
- **Section 183.11, Selection.**
- **Section 183.13, Certification.**
- **Section 183.15, Duration of Certificates.**
- **Section 183.17, Reports.**
- **Section 183.23, Pilot Examiners.**
- **Section 183.25, Technical Personnel Examiners.**
- **Administrative.**

13-106 GENERAL. This section contains information and guidance to be used by certificate managers, principal operations inspectors (POI), and inspectors concerning aircrew program designees (APD) and Designated Flight Engineer Examiner (DFEE) responsibilities, and the selection, training, supervision, and administrative control of APDs/DFEEs in an Aircrew Designated Examiner (ADE) program. This section is related to Safety Assurance System (SAS) Element 2.1.5 (OP), Appropriate Airmen/Crewmember Checks and Qualifications.

13-107 PRIVILEGES OF APDs/DFEEs. All certification conducted by an APD/DFEE must be limited to the privileges of the APD/DFEE's airman certificate, the APD/DFEE's Certificate of Authority (COA), the APD/DFEE's letter of authority (LOA), one certificate type (pilot or Flight Engineer (FE)), and one aircraft type.

G. Privileges. An APD is authorized to perform airman certification in one type of aircraft for an operator's pilots who have been trained under the operator's Federal Aviation Administration (FAA)-approved training program. A DFEE in an ADE program is authorized to perform airman certification for an operator's FE candidates who have been trained under the operator's FAA-approved training program.

H. Limitations.

1) Evaluation of any applicant by an APD/DFEE when the examiner has instructed that student or when the examiner has recommended the applicant is not recommended and must be approved by the POI or aircrew program manager (APM) on a case-by-case basis.

2) APDs/DFEEs may not conduct FAA knowledge tests, special medical evaluations, tests for waivers, or any test for competency under Title 49 of the United States Code (49 U.S.C.) § 44709 (formerly Section 609a of the Federal Aviation Act of 1958 (FA Act)). Applicants for such tests must be referred to the APM or the Flight Standards District Office (FSDO), or certificate management office (CMO).

UNCONTROLLED COPY WHEN DOWNLOADED
Check with FSIMS to verify current version before using

I. Designation as an Examiner Outside of an ADE Program. An individual's designation as an APD/DFEE does not prevent the individual from obtaining a designation as an examiner in another program or capacity. When an APD/DFEE holds a designation, the privileges and limitations that may be exercised outside of the ADE program must be specified on the COA and LOA. The privileges and limitations listed on the COA issued outside an ADE program do not apply to the ADE program.

13-108 SELECTION OF AN APD/DFEE.

J. Eligibility Requirements. The following apply to the selection of APD and DFEE candidates:

1) Must be employed by the operator either full-time, part-time, or under contract to the operator.

2) Must possess the appropriate airman certificate, class rating, and type rating, if applicable.

3) Must be an FAA-approved proficiency check pilot or check FE, as applicable, for the operator for the aircraft in which the APD/DFEE candidate is to perform examiner duties. To perform examiner duties in an aircraft in flight, APD candidates must also be an FAA-approved line check pilot—all seats and proficiency check pilot—aircraft for the operator for that aircraft.

4) Should have served as a check pilot or check FE for a minimum of 1 year (APD candidates—preferably 6 months as a proficiency check pilot) before designation as an APD/DFEE. (Check pilot/check FE experience in other types of aircraft and in service with other operators may be credited. Crediting of past experience, including length of time and type of check pilot/check FE, is at the discretion of the POI and APM.)

5) Must possess an above-average level of knowledge, ability, and experience.

6) Must have a good record of compliance with Title 14 of the Code of Federal Regulations (14 CFR) (isolated and unrelated violations or incidents are not disqualifying).

K. Evaluation of Qualifications. The APD/DFEE candidate must submit a complete statement of professional qualifications on FAA Form 8710-6, Examiner Designation and Qualification Record. The APM must review the qualifications to determine whether the candidate meets the requirements and standards for an APD/DFEE designation. If the candidate is eligible, the APM may recommend to the POI that the candidate be designated as an APD/DFEE. An APD/DFEE selection must be agreed upon by the APM, the POI, and the operator.

13-109 APD TRAINING AND EVALUATION. The APM must train and evaluate the prospective APD/DFEE on APD/DFEE duties and responsibilities as follows:

L. Training. Inspectors should ensure that the APD/DFEE is trained and evaluated in at least the following areas:

UNCONTROLLED COPY WHEN DOWNLOADED
Check with FSIMS to verify current version before using

- The knowledge, ability, and skill requirements for the original issuance of the Airline Transport Pilot (ATP) Certificate and added ratings, as applicable (FE certificate and added rating for DFEE candidates);
- The procedures, methods, and techniques associated with administering the required certification tests;
- The responsibilities, authority, and limitations of an examiner under 14 CFR;
- The use of FAA forms and job aids associated with the particular APD/DFEE function; and
- The administrative procedures and supervisory relationships that exist in an ADE program.

NOTE: The POI and the APMs must stress to examiner candidates that in performing their duties as an APD/DFEE, they are representatives of the Administrator and responsible to the Administrator. Prospective APDs/DFEEs must understand that company politics, economics, union loyalties, and seniority issues are not relevant when certificating airmen.

M. Evaluation. After formal training, an APD/DFEE candidate must observe the APM in conducting a complete oral test, flight test, the necessary briefings, and the completion of the certification paperwork. The APM must then observe and evaluate the APD/DFEE candidate in conducting at least one complete oral test and complete flight test, including the necessary briefings and certification paperwork for the certificate or added rating involved.

13-110 SUPERVISION AND ADMINISTRATIVE CONTROL OF APDs/DFEEs. The APM assigned to a particular aircraft type is responsible for the supervision of APDs and DFEEs who conduct airman certification activities for that aircraft type. Inspectors should evaluate the supervisory and administrative process, taking into account the following:

N. Working Relationships. An APM observes and counsels APDs and DFEEs. An APM should emphasize to APDs and DFEEs appropriate methods for handling applicants, maintaining desired test standards, and completing and processing certification and Program Tracking and Reporting Subsystem (PTRS) paperwork. An APM should endeavor to maintain a working relationship with each APD and DFEE which promotes the examiner's confidence in the performance of their duties and in their interactions with their assigned APM. An APM must conduct regular meetings with the program's APDs and DFEEs for the purpose of maintaining these effective working relationships. During the APD/DFEE meetings, a close and continuing dialogue for the clarification of problem areas should be developed. Special meetings should be held when there is any change to FAA airman certification requirements, policies, or procedures affecting the particular APD/DFEE or the program in general. An APM should attend crewmember safety and standardization meetings held by the operator.

O. APD/DFEE Supplies and Materials. An APM must ensure that APDs and DFEEs have continuing access to the following materials, including current amendments and additional supplies, as needed:

- Volumes 5 and 13.
- All appropriate job aids.

UNCONTROLLED COPY WHEN DOWNLOADED
Check with FSIMS to verify current version before using

- FAA Form 8000-36, Program Tracking and Reporting System Data Sheet, which may be overprinted to facilitate standardization of data entered into the system.
- FAA Form 8060-4, Temporary Airman Certificate.
- FAA Form 8060-5, Notice of Disapproval of Application.
- FAA Form 8400-3, Application for an Airman Certificate and/or Rating (FE).
- FAA Form 8710-1, Airman Certificate and/or Rating Application (Pilot).

13-111 PROCESSING INITIAL APD/DFEE DESIGNATIONS.

P. APM Responsibilities. When processing an initial APD/DFEE designation, the APM must ensure that all requirements for designation have been met. The APM must prepare all of the necessary additional paperwork. The APM must complete the back of FAA Form 8710-6 and sign the space labeled "Inspector's Signature." The APM must enter the words "Aircrew Program Designee" or "Designated Flight Engineer Examiner" and the aircraft type in the space labeled "Type of Designation" under the "District Certificate Management or Regional" block. The APM must record the APD/DFEE designation number under the space labeled "Certificate of Authority Issued" in the space titled "No." The expiration date is the last day of the month that is 1 year from the date of designation. The "DO to Serve Under" space should be left blank by the APM.

Q. POI Approval. The POI, or an inspector authorized to act for the POI, must indicate approval by completing the first line of the block labeled "District Certificate Management or Regional" on FAA Form 8710-6 and then sign in the appropriate space. POIs, or authorized inspectors, must also sign FAA Form 8000-5, FAA Form 8430-9, and the LOA. The originals of these forms must be issued to the APD/DFEE, and copies must be retained in the APD/DFEE's file in the managing Flight Standards office.

R. APD Designation Numbers (Examiner Designation Numbers). For APDs and DFEEs, the airman's certificate number coupled with the applicable four-character designator for the operator may be used in all instances when an Examiner Designation Number may be called for (e.g., 123456789DALA for an APD/DFEE at Delta Airlines). The four-character suffix will allow for differentiation between programs when there is more than one ADE program within the same Flight Standards office.

13-112 RENEWAL OF APD DESIGNATIONS. APD/DFEE designations must be renewed every 12 calendar-months as follows:

S. Renewal Date. The renewal date is 1 month prior to the expiration date. An APD/DFEE may not conduct certification tests after the expiration date.

T. Renewal Application. See Volume 13, Chapter 1, Section 2, paragraph 13-37, Renewal of Designations, for renewal procedures. In order to renew a designation, an APD/DFEE must submit the following documentation to the APM:

UNCONTROLLED COPY WHEN DOWNLOADED
Check with FSIMS to verify current version before using

- The expiring FAA Form 8430-9;
- A newly completed FAA Form 8710-6; and
- Evidence of having attended, during the past 12 calendar-months, at least one APD/DFEE safety meeting or a briefing conducted by the APM (such as a notation on the back of the FAA Form 8430-9, signed by the APM).

U. Annual Observation. At least once within the year preceding an APD/DFEE's renewal, the examiner must be observed conducting a complete certification. The observation is made by the APM or by another appropriately rated inspector designated by the APM or POI. Preferably, this observation should take place within 3 calendar-months before the current designation expires (PTRS code 1672). To complete the observation, the APD/DFEE must conduct at least one oral examination and one complete flight evaluation. When an examiner designation is renewed, the day and month will normally remain the same, and only the year will be changed.

NOTE: If it is acceptable in an operator's approved training program for the entire proficiency or flight check to be accomplished in a full flight simulator (FFS), then the APM is not required to observe the APD/DFEE in the aircraft for a renewal.

V. APM and POI Responsibility. Before renewing an APD/DFEE designation, the APM and POI must determine whether the APD/DFEE's services have been satisfactory, whether the APD/DFEE's level of activity warrants a renewal, and whether the APD/DFEE's services continue to be needed. The examiner's level of activity may be determined from the PTRS.

W. Processing a Renewal. The administrative steps for renewal are the same as those outlined for original designation (see paragraph 13-111).

13-113 AMENDMENT OF APD/DFEE DESIGNATIONS. An APD/DFEE may be issued only one FAA Form 8430-9. An APD/DFEE's examining authority should normally be cancelled when the APD/DFEE enters transition training on a new aircraft type. The POI may designate a former APD/DFEE, provided the following actions have been completed:

X. Pilot in Command (PIC)/FE Training. The APD/DFEE must have completed the operator's approved PIC or FE ground and flight training for the new aircraft. The APM must determine whether the designee has accumulated sufficient experience on the new aircraft to accumulate an above-average level of knowledge of its systems and operations.

Y. Check Pilot/Check FE Training. An APD must have completed the operator's check pilot training and be approved as a proficiency check pilot for the new aircraft. A DFEE must have completed the operator's check FE training and be approved as a check FE for the new aircraft.

Z. Interview and Review. The APM for the new aircraft must hold an interview with the APD/DFEE to establish an appropriate working relationship and review the administrative processing (paperwork/documentation) procedures for certification activities.

UNCONTROLLED COPY WHEN DOWNLOADED
Check with FSIMS to verify current version before using

AA. Oral Examination/Flight Evaluation. The APM for the new aircraft must observe the APD/DFEE conducting at least one complete oral examination and complete flight evaluation, as appropriate to the certificate or type rating involved, on the new aircraft type.

BB. Issuance of New Designation. The administrative steps for the issuance of the new designation are the same as those outlined for initial designation (see paragraph 13-111).

13-114 PROCESSING APD/DFEE CERTIFICATION PAPERWORK. An APD/DFEE must forward the airman certification paperwork to the managing Flight Standards office for review, processing, and transmittal to the Airmen Certification Branch. The paperwork must be accepted and processed only by the managing Flight Standards office. Use of the Integrated Airman Certification and/or Rating Application (IACRA) program for processing applications is highly encouraged.

CC. APD/DFEE Responsibilities. An APD/DFEE must complete the airman certification paperwork in accordance with the requirements of Volume 5, Chapters 1, 3, and 4, as applicable. An APD/DFEE will complete the PTRS data sheet for each evaluation function conducted. An APD/DFEE is responsible for the accurate, complete, and timely submission of certification paperwork. Satisfactory fulfillment of this responsibility is a condition for continued designation as an APD/DFEE.

DD. APM Responsibilities. An APM is responsible for training each APD/DFEE in correct documentation procedures.

13-115 REVIEW OF APD/DFEE's DECISION. If an airman is dissatisfied with an APD/DFEE's decision, the airman may appeal to an APM for a reevaluation. The airman must submit the appeal in writing and indicate the reasons for protesting the APD/DFEE's decision. The APM must review the matter and decide if reevaluation is warranted. If a reevaluation is granted, a new application must be completed, and the entire evaluation must be reaccomplished by an FAA inspector.

13-116 TERMINATION OF APD/DFEE DESIGNATIONS. An APD/DFEE designation may be terminated or canceled for cause by the POI at any time. See Volume 13, Chapter 1, Section 2 for applicable procedures.

RESERVED. Paragraphs 13-117 through 13-135.

UNCONTROLLED COPY WHEN DOWNLOADED
Check with FSIMS to verify current version before using